Miele

PG 8582, PG 8592 UNDERCOUNTER WASHER-DISINFECTORS

For effective thermal disinfection of mission-critical medical and surgical instruments, the PG 8582 and PG 8592 medical undercounter washer-disinfectors offer a safe and effective reprocessing solution. Application specific wash programs, tailored process chemicals and flexible basket configurations are designed to meet a range of reprocessing demands.

- High capacity throughput (up to 44 lumen instruments)
- 8 DIN mesh trays
- 2-3 AN sets
- 1-2 MIS sets
- Targeted application, not limited to Ophthalmology, Plastic Surgery, ENT, OBGYN/Fertility
- Rear basket docking
- Variable Speed pump
- Auto liquid dispensing
- Multi-stage filter system
- Spray arm monitoring
- PG 8582 ECO dry - AutoOpen function
- PG 8592 DryPlus - Hot air HEPA drying
- PG 8592 External DOS pump

Test Certificate

- cCSAus Certified
- Class II medical device

Business Benefits

- Flexibility of the chamber design makes it ideal for cleaning and disinfecting medical instruments across a wide range of healthcare applications from Opthalmology, Plastic Surgery, ENT, OBGYN, providing a safe and efficient solution to hand washing and ultrasonic cleaning.
- Modular basket configurations, tailored for specific medical applications to accommodate all types and sizes of instruments.

Labour Savings

- Rear basket docking system guarantees streamlined and efficient water and air circuit usage.
- Variable-speed pump and integrated heater element for perfect spray pressure in all program phases.

Exceptional Protection

- Chamber is made from high-grade stainless steel (DIN 1.440/AISI 316L).
- Laser welded and crevice-free hygenic chamber enables high standards of hygiene and purity.
- Spray pressure and arm monitoring contribute to ensuring reliability of reprocessing.
- Thermal disinfection for thermostable wash items.

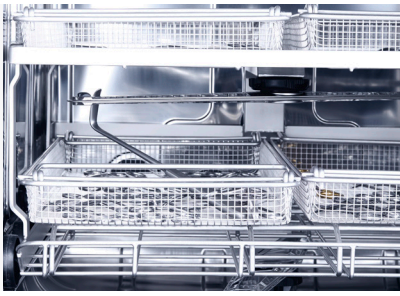

Immer Besser

since 1899

For more information on product, scan the QR code.

Miele Ltd., 161 Four Valley Dr., Vaughan, ON L4K 4V8, Canada
P | 888.325.3957 | **E** | professional@miele.ca | mieleprofessional.ca

PG 8582, PG 8592 UNDERCOUNTER WASHER-DISINFECTORS

PG 8582
62858204CDN

PG 8592
62859201CDN

Program	Max. Wash Temperature	Max. Final Rinse Temperature
Vario TD 4 trays	55°C (131°F)	93°C (199°F)
Vario TD 6 trays	55°C (131°F)	93°C (199°F)
Vario TD MIS	55°C (131°F)	93°C (199°F)
Vario TD 8 trays	55°C (131°F)	93°C (199°F)
Vario TD AN	55°C (131°F)	83°C (181°F)
Vario TD GYN	55°C (131°F)	93°C (199°F)
Ophtha Trays	55°C (131°F)	93°C (199°F)
Ophthalmology	55°C (131°F)	93°C (199°F)
Vario TD ENT	65°C (149°F)	93°C (199°F)
Vario TD ENT Optics		93°C (199°F)
Vario TD ENT plus	55°C (131°F)	93°C (199°F)
Baby bottles	65°C (149°F)	93°C (199°F)
OR shoes	45°C (113°F)	83°C (181°F)

Unit Dimensions			
Machine dimensions H x W x D [mm, in.]	835, 32 7/8 x 600, 23 5/8 x 600, 23 5/8	**Chamber size [L, cu.ft]**	145, 5.12
Usable wash cabinet H x W x D [mm, in.]	520, 20 1/2 x 530, 20 7/8 x 520 20 1/2		

Electrical	
Default	2AC 208V 30A 60Hz / 6.2KW / 3 x AWG 10; NEMA L6-30R required on site
Option	3AC 208V 20A 60Hz

Plumbing	
Cold water	2 x 3/4 in. MGHT required on site / Flow rate 2 gpm (7.5L/min.) / Water pressure 14.5-145 psi (100-1,000 KPa), pressurized
Hot water	1 x 3/4 in. MGHT required on site / Flow rate 2 gpm (7.5L/min.) / Water pressure 5.8-145 psi (40-1,000 KPa), pressurized
DI water	1 x 3/4 in. MGHT required on site / Flow rate 2 gpm (7.5L/min.) / Water pressure 4.4-145 psi (30-1,000 KPa), pressurized. Below 29 psi = booster pump
Drain connection	1 x 3/4 in. Barbed connector required on site / Flow rate 4.2 gpm (16L/min.)

Shipping			
Dimensions H x W x D [mm, in.]	920, 34 1/4 x 670, 26 3/8 x 740, 29 3/8	**Weight [kg, lbs.]**	74, 163

For more information, refer to Installation Manual.

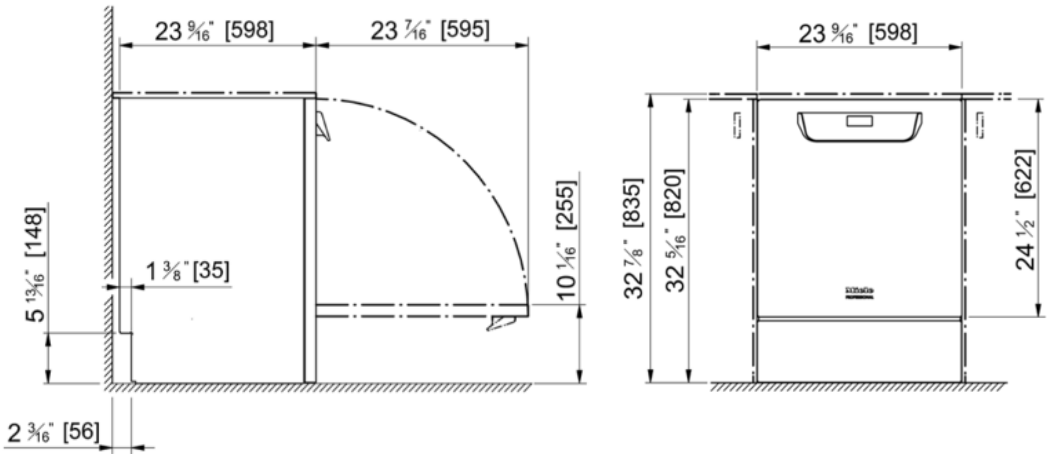

Please refer to the installation plan for connections.

Miele Ltd., 161 Four Valley Dr., Vaughan, ON L4K 4V8, Canada
P | 888.325.3957 | **E** | professional@miele.ca | mieleprofessional.ca