AWG 102
External motor
for installation on outside wall.

EAN: 4002513226225 / Material number: 05680680 / Old Material Number: 28996197D

- Relocates fan to outside kitchen
- Single-sided radial fan
- Exhaust duct 125/150 mm diameter
- Fan connection to the hood via connector plug
- Fan power: Unrestricted air throughput 280-900 m3/h

AWG 102
External motor
for installation on outside wall.

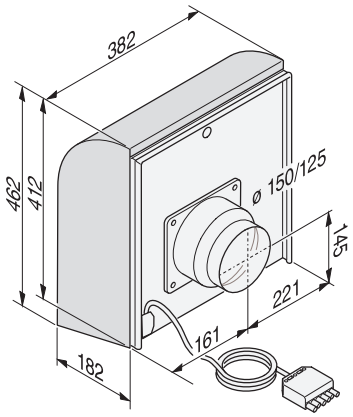

AWG102 (Installation drawing)