Miele

TCA220WP Active
T1 heat-pump dryer:
A++ I 7 kg I EcoDry I FragranceDos I PerfectDry

EAN: 4002516488293 / Material number: 11871720 / Old Material Number: 12CA2202GB

- EcoDry ensures efficient performance over the entire tumble dryer service life
- FragranceDos ensures your laundry smells wonderfully fresh after drying*
- PerfectDry ensures that your laundry is not too damp or too dry
- Highest condensation efficiency protects both furniture and rooms
- Easy operation via sensor controls – EasyControl

* Patent EP 2 431 516

A+++ ↑ D A++

Construction type	
Suitable for stacking	•
Side-by-side	•
Slot-in	•
Can be built-under	•
Door hinge	left
Model	
Product brand	T1 Chrome Edition
Heat pump dryer	•
Design	
Appliance colour	Lotus white
Control panel colour	Lotus white
Door design	White
Rotary selector colour	Lotus White
Control panel version	Straight
Control type	Rotary control
Display	EasyControl yellow
Drying results	
PerfectDry precision drying	•
FragranceDos fragrance system	•
Intelligent drum reversal	•
Gentle laundry care	
Honeycomb drum	•
Load in kg	7.0
User convenience	
Delay start up to 24 hours	•
Time left display	•
Programme sequence indicator	No
Drum lighting	LED
Condensate container	•
Integrated condensed water drainage	•
AddLoad	•
Efficiency and sustainability	
Energy efficiency class (A+++ – D)	A++
Annual energy consumption in kWh	208
Duration in minutes in the standard programme	155
Noise in the Cottons programme with full load in db(A) re 1 pW	66
Condensation efficiency class	A
Energy consumption in kWh in the Cottons Normal dry standard programme with a full load	1.70
EcoDry technology	•
Maintenance-free heat exchanger	•
Drying programmes	
Cottons (coloureds)	•
Cottons arrow	•
Minimum iron	•
Delicates	•
Shirts	•
Woollens handcare	•

TCA220WP Active
T1 heat-pump dryer:
A++ I 7 kg I EcoDry I FragranceDos I PerfectDry

EAN: 4002516488293 / Material number: 11871720 / Old Material Number: 12CA2202GB

Express	•
Denim	•
Proofing	•
Pre-Ironing	•
Bed linen	•
Warm air/DryFresh	•
Drying extras	
Anti-crease	•
Gentle tumble	•
Quality	
Soft ribs	•
Safety	
PIN-Code	•
Empty out container indicator	•
Clean filter indication	•
Optical interface	•
Technical data	
Dimensions in mm (width)	596
Dimensions in mm (height)	850
Dimensions in mm (depth)	640
Appliance depth in mm with opened door	1054
Weight in kg	56
Total rated load in kW	1.10
Voltage in V	220-240
Fuse rating in A	13
Frequency in Hz	50
Length of supply lead in m	2.0
Hermetically sealed	•
Type of coolant	R290
Refrigerant quantity in kg	0.11
Refrigerant global warming potential in CO_2 e	3
Appliance global warming potential in CO_2 e	0.33
Replacing lamps	Service
Accessories included	
Fragrance flacon	•
Voucher for a second fragrance flacon	•

TCA220WP Active
T1 heat-pump dryer:
A++ I 7 kg I EcoDry I FragranceDos I PerfectDry

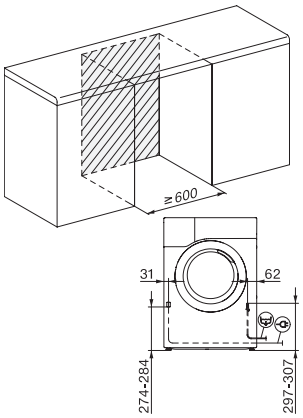

T1 installation drawing, slanted facia or straight facia, measures in mm

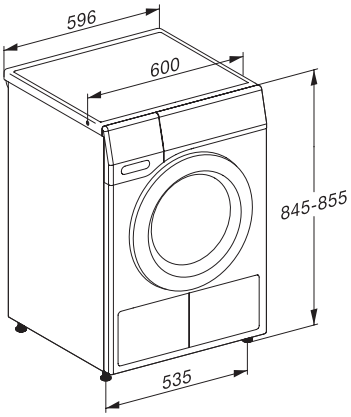

T1 drawing, slanted facia or straight facia, measures in mm

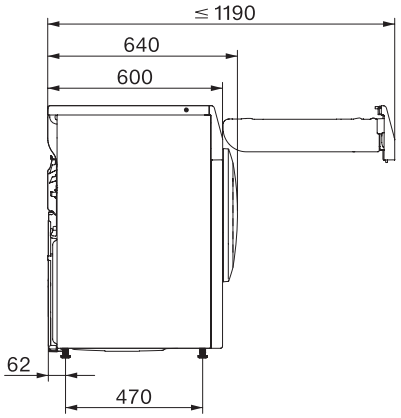

T1 drawing, slanted facia or straight facia, without porthole, measures in mm

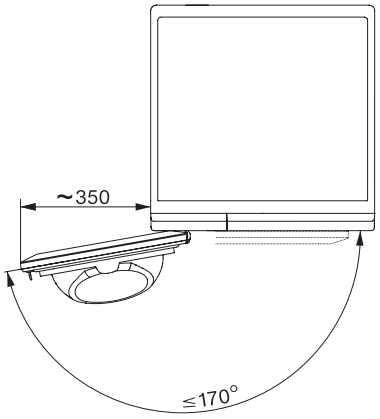

T1 drawing, slanted facia or straight facia, measures in mm