KWT 7112 iG
Built-in wine conditioning unit
with FlexiFrame Plus and Push2open for the most demanding wine connoisseurs.

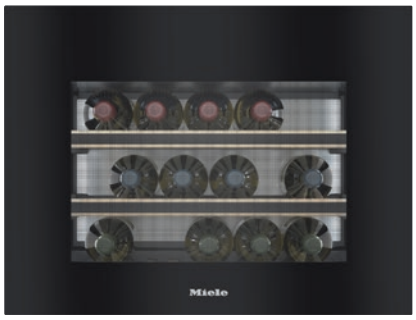

- Great storage of larger wine bottles thanks to FlexiFrame Plus
- Perfect design for handleless kitchens – Push2open
- Odourless refrigeration section thanks to Active AirClean filters
- Present your wine in the perfect light – LED lighting
- Optimum wine protection through UV filters in tinted glass front

A↑G G

EAN: 4002516150923 / Material number: 11186580 / Old Material Number: 36711201EU1

Appliance category	
Wine conditioning unit	•
Construction type	
Built-in appliance	•
Integrated appliance	•
Door hinge	Bottom
Design	
Front colour	Obsidian Black glass
Wine compartment lighting	LED illumination
User convenience	
Networking with Miele@home	•
Accessories required	XKS 3130 W, XKV 3000 KF
DynaCool	•
SoftClose	•
Concealed door opener	Push2open
Push2open	•
Number of shelves	3
Shelf material	Beechwood
Number of FlexiFrame racks	2
Number of FlexiFrame Plus wooden racks	2
Low-vibration storage	•
Control system	
Operating concept	TouchControl
Independent temperature regulation of fridge and freezer zones	No
No. of temperature zones	1
Min. temperature setting range in °C	5
Max. temperature setting range in °C	20
Efficiency and sustainability	
Energy efficiency class (A–G)	G
Annual energy consumption in kWh	115.71
Energy consumption in 24 h in kWh	0.31
Safety	
Lock function	•
Acoustic door alarm	•
Acoustic temperature alarm	•
Optical door alarm	•
Optical temperature alarm	•
Technical data	
Niche width in mm min.	560
Niche width in mm max.	570
Niche height in mm min.	450
Niche height in mm max.	452
Niche depth in mm	550
Appliance width in mm	595
Appliance height in mm	455
Appliance depth in mm	559
Weight in kg	36.0
Climate class	SN-ST
Refrigerator compartment in l	47

KWT 7112 iG
Built-in wine conditioning unit
with FlexiFrame Plus and Push2open for the most demanding wine connoisseurs.

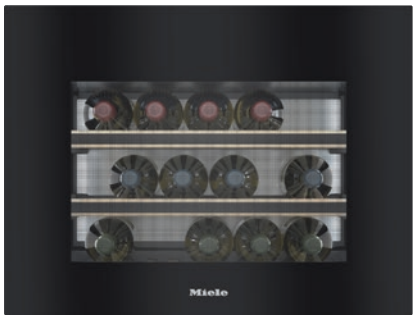

EAN: 4002516150923 / Material number: 11186580 / Old Material Number: 36711201EU1

Wine compartment in l	47
Total usable capacity in l	47
0.75 l Bordeaux bottle capacity (no. of bottles)	18 bottles
Storage time in case of fault in h	0
Acoustic airborne noise emission class (A–D)	B
Sound emissions in dB(A) re 1 pW	32
Current consumption (mA)	500
Voltage in V	220-240
Fuse rating in A	10
Number of phases	1
Frequency in Hz	50
Length of supply lead in m	2.2
Accessories included	
Active AirClean filter	•

KWT 7112 iG
Built-in wine conditioning unit
with FlexiFrame Plus and Push2open for the most demanding wine connoisseurs.

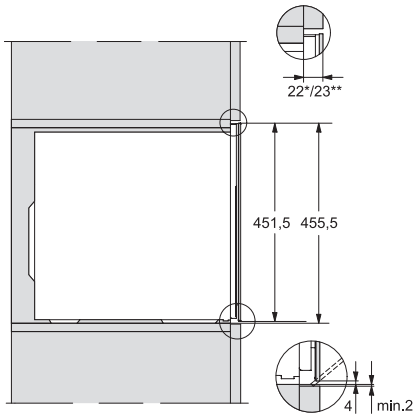

KWT7112 iG, *Footnote (Sketch)

* Appliances with glass front, ** Appliances with metal front,

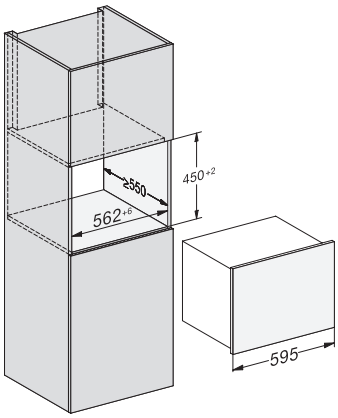

KWT7112 iG (Sketch)

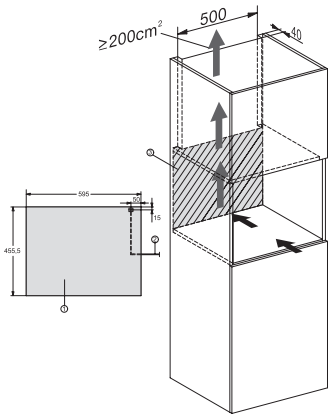

KWT7112 iG, *Footnote (Sketch)

* Appliances with glass front, ** Appliances with metal front, 1) Front view, 2) Mains connection cable, L=2200 mm, 3) No connection in this area,

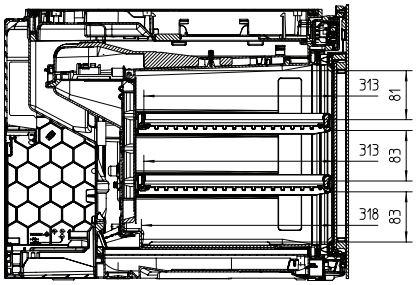

KWT7112iG, KWT6112iG, Interior dimensions (Installation drawings)