KM 7999 FL
Induction hob with onset controls
with TempControl for perfect frying results

- Intelligent controls thanks to the touch display
- Flexible cooking areas for up to five pans
- With 8 TempControl sensors
- A width of 936 mm for surface-mounted or flush-fit installation
- Communication with the cooker hood – automatic Con@ctivity function

EAN: 4002516235521 / Material number: 11144120 / Old Material Number: 26799970GB

Heating type	
Heating type	Induction
Construction type	
Independent of cooker	•
Design	
Elegant glass ceramic surface	•
Flush	•
Ceramic surface colour	Graphite black
Print design	SilentMove
Cooking zone details	
Number of cooking areas	3
Maximum number of pans	5
1st cooking zone/cooking area	
Position	Left
Type	TempControl cooking zone
Size in mm	230x380
Max. Booster power rating in W	3600
Max. rating in W	2800
2nd cooking zone/cooking area	
Position	Centred
Type	TempControl cooking zone
Size in mm	370x290
Max. Booster power rating in W	3600
Max. rating in W	2800
3rd cooking zone/cooking area	
Position	right
Type	TempControl cooking zone
Size in mm	230x380
Max. Booster power rating in W	3600
Max. rating in W	2800
User convenience	
Miele@home	•
Operation via sensor controls	Touch display
Automatic function Con@ctivity	•
Pan and pan size recognition	•
Operation via touch display	•
Display colour	Multi-coloured
Stop & Go function	•
Recall function	•
TempControl	•
PowerFlex Plus	•
Safety switch-off	•
Permanent pan recognition	•
Individual setting options (e.g. buzzers)	•
Wipe protection	•
Minute minder	•
Assistance programmes	•
Cleaning and care	
Easy to clean ceramic glass	•

KM 7999 FL
Induction hob with onset controls
with TempControl for perfect frying results

EAN: 4002516235521 / Material number: 11144120 / Old Material Number: 26799970GB

Safety	
Safety switch-off	•
Integrated cooling fan	•
Overheating protection	•
Residual heat indicator	•
Technical data	
Dimensions in mm (width)	936
Dimensions in mm (height)	67
Dimensions in mm (depth)	520
Cutout dimensions in mm (width) with surface-mounted installation	916
Cutout dimensions in mm (depth) with surface-mounted installation	500
Casing height incl. connection box in mm	67
Internal cutout dimensions in mm (width) with flush installation	916
Internal cutout dimensions in mm (depth) with flush installation	500
Weight in kg	22
External cutout dimensions in mm (width) with flush installation	940
External cutout dimensions in mm (depth) with flush installation	524
Total rated load in kW	10.35
Length of supply lead in m	1.3
Voltage in V	230
Frequency in Hz	50-60
Accessories included	
Mains cable	Yes
WiFi stick XKS 3170 W	•

KM 7999 FL
Induction hob with onset controls
with TempControl for perfect frying results

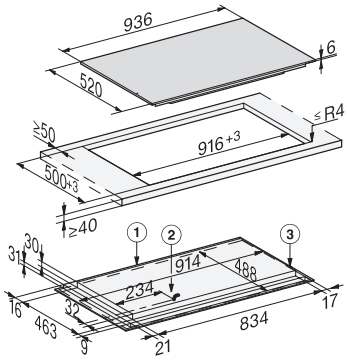

KM7999FL, KM7999-2FL (installation drawing) – onset

1) Front, 2) Mains connection box with mains connection cable, L = 1280 mm, are enclosed loosely, 3) WLAN stick connection point

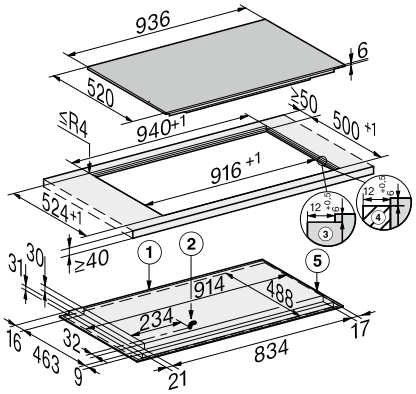

KM7999FL, KM7999-2FL (installation drawing) – flush-fit

1) Front, 2) Mains connection box with mains connection cable, L = 1280 mm, are enclosed loosely, 3) Stepped cut-out natural stone worktop, 4) Wood support 12 mm (not supplied), 5) WLAN stick connection point