Miele

H 7840 BMX
Handleless microwave combination oven
with a seamless design, automatic programmes and food probe

- Large touch display with movement sensor – M Touch + MotionReact
- Easy cleaning – compartment with PerfectClean & linen structure
- Faster and more consistent results – Quick & Gentle
- Network-enabled WiFi appliance – Miele@home
- Get what you want in one easy step – Quick MW and Popcorn button

EAN: 4002516159339 / Material number: 11093750 / Old Material Number: 22784066GB

Construction type and design	
Built-in microwave combination oven	•
Colour	Obsidian black
ArtLine	•
Handleless	•
Convenience features	
Quick & Gentle	•
Rapid heat-up	•
Pre-heating	•
Food probe	With cable
Keeping warm	•
Crisp function	•
Operating modes	
Defrosting	•
Automatic programmes	•
Country-specific automatic programmes	•
Auto roast	•
Eco fan heat	•
Grill	•
Fan plus	•
Intensive bake	•
Low temperature cooking	•
Microwave	•
Microwave with Auto roast	•
Microwave + Grill	•
Microwave + Fan plus	•
Microwave + Fan grill	•
Conventional heat	•
Bottom heat	•
Fan grill	•
Special applications	•
User convenience	
Networking with Miele@home	•
Display	M Touch
MotionReact proximity sensor	•
MotionReact: light comes on when movement is detected	•
MotionReact: display comes on when movement is detected	•
MotionReact: audible signal is acknowledged when movement is detected	•
MotionReact: detection of cabinet fronts	•
SoftOpen	•
Touch2Open	•
3 in 1	Oven, Microwave, Oven with microwave function
MultiLingua	•
MyMiele	•
Help function	•
Popcorn function	•
Polyphonic buzzers	•
Time of day display	•

H 7840 BMX
Handleless microwave combination oven
with a seamless design, automatic programmes and food probe

EAN: 4002516159339 / Material number: 11093750 / Old Material Number: 22784066GB

Clock synchronisation	•
Date display	•
Minute minder	•
Programmable start of cooking duration	•
Programmable end of cooking duration	•
Programmable cooking duration	•
Actual temperature display	•
Target temperature display	•
Buzzer when desired temperature is reached	•
Recommended temperature	•
Recommended microwave power	•
Quick microwave	•
User programmes	•
Individual settings	•
Efficiency and sustainability	
Automatic residual heat utilisation	•
Power rating in off mode in W	0.5
Power rating in standby mode in W	1.0
Power rating in networked standby in W	2.0
Time until automatic switch to standby in min	20
Time until automatic switch to networked standby in min	20
Time until automatic switch to off mode in min	20
Cleaning and care	
Stainless-steel oven compartment with linen structure and PerfectClean	•
Hinged grill element	•
CleanGlass door	•
Safety	
Appliance cooling system and touch-cool front	•
Safety switch-off	•
System lock	•
Sensor lock	•
Technical data	
Oven compartment volume in l	43
No. of shelf levels	3
Number of shelf levels oven compartment 1	3
Number of shelf levels oven compartment 2	3
Oven light	1 LED spot
Temperatures in °C	30–250
Electronic temperature regulation min. in °C	30
Electronic temperature regulation max. in °C	250
Electronically controlled microwave power	•
Microwave power levels in W	
Niche width min. in mm	560
Niche width max. in mm	568
Niche height min. in mm	450
Niche height max. in mm	452
Niche depth in mm	550
Appliance width in mm	595
Appliance height in mm	456
Appliance depth in mm	562

H 7840 BMX
Handleless microwave combination oven
with a seamless design, automatic programmes and food probe

EAN: 4002516159339 / Material number: 11093750 / Old Material Number: 22784066GB

Weight in kg	38.0
Total rated load in kW	3.20
Voltage in V	220-240
Frequency in Hz	50
Fuse rating in A	16
Number of phases	1
Length of supply lead in m	2.00
Replacing lamps	Service
Accessories included	
Baking and roasting rack with PerfectClean	1
Wired food probe	1
Glass tray	2
Available display languages	
Available display languages via MultiLingua	bahasa malaysia, dansk, deutsch, english, español, français, hrvatski, italiano, magyar, nederlands, norsk, polski, português, русский, română, slovenčina, slovenščina, srpski, suomi, svenska, türkçe, українська, čeština, ελληνικά, ᎥᎥᎥᎥᎥᎥᎥ , ᎥᎥ , ᎥᎥᎥ , ᎥᎥᎥᎥ , ᎥᎥᎥ

H 7840 BMX
Handleless microwave combination oven
with a seamless design, automatic programmes and food probe

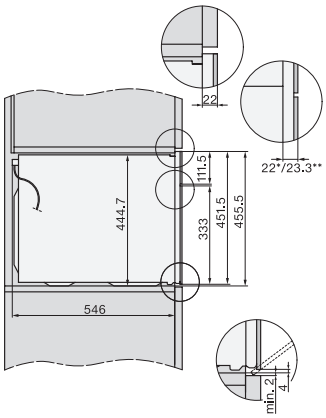

side view H7000 BM, installation drawings, GB, AUS

22 mm – glass, 23.3 mm – metal

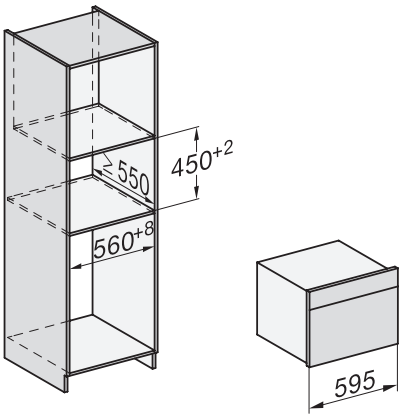

built-in H7000 BM, installation drawing

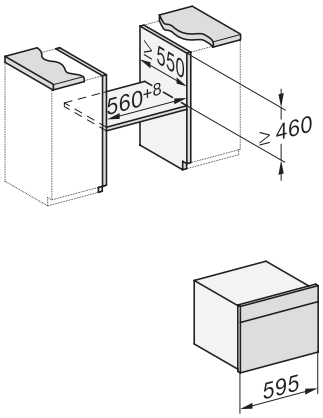

built-in H7000 BM build-under, installation drawings

If the oven is to be installed under a hob, follow the instructions for installing the hob and the height of the hob.

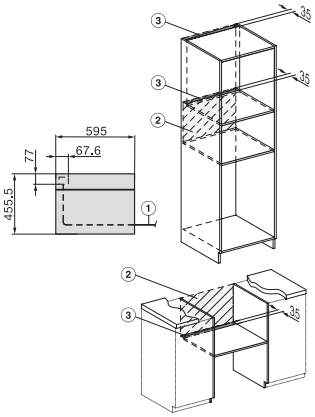

Installation H7000BM, installation drawings, GB, AUS

1) Mains connection cable, L=2000 mm, 2) No connection in this area, 3) Lüftungsausschnitt min. 150 cm²

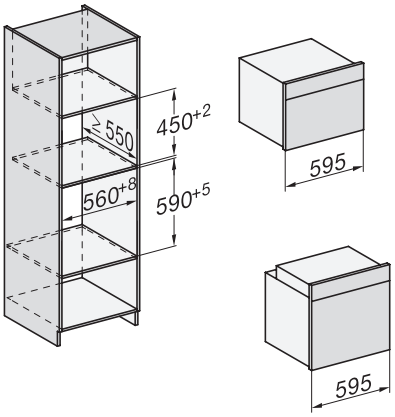

Installation H7000 BM XL, installation drawings

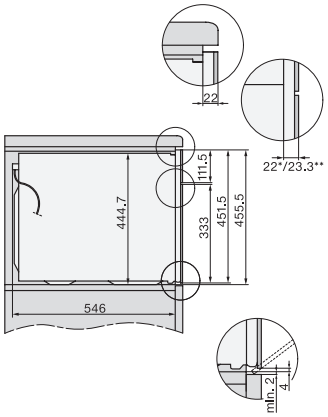

side view H7000 BM build-under, installation drawing, GB, AU

22 mm – glass, 23.3 mm – metal

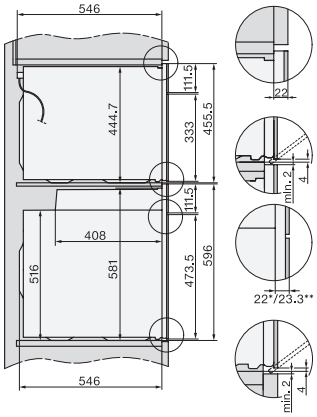

Side view Kombi BM XL, installation drawings

22 mm – glass, 23,3 mm – metal

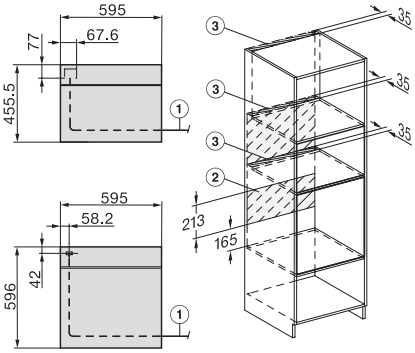

Installation Kombi BM XL, installation drawings

22 mm – glass, 23,3 mm – metal