Miele

DA 6498 W Pure Black
Wall mounted cooker hood
with energy-efficient LED lighting and touch controls for simple operation.

- Lots of headroom – 899 mm wide with an exclusive glass design
- Unique user convenience – Con@ctivity
- Powerful – 610 m3/h in Booster level
- Energy-efficient and quiet – powerful ECO motor
- Safe and easy to clean – Miele CleanCover

A++

EAN: 4002515961308 / Material number: 10805780 / Old Material Number: 28649840GB

Construction type	
Wall mounted cooker hood	•
Operating modes	
Type of air guide	Can be retrofitted
Active charcoal filter (order separately)	DKF 25-P
Design	
Colour	Obsidian black
Edge extraction	•
User convenience	
Miele@home	•
Automatic function Con@ctivity	•
Electronic controls	•
Power levels (number without Booster level)	3
Touch controls	•
Miele@mobile app	•
Programmable Booster level switch-off	•
Run-on time 5/15 min.	•
Grease filter saturation indicator	•
Grease filter saturation indicator programmable	•
Active charcoal filter saturation indicator programmable	•
Easy-to-clean canopy interior – CleanCover	•
Efficiency and sustainability	
Annual energy consumption in kWh/year	25.1
Energy efficiency class (A+++ – D)	A++
Fluid dynamic efficiency class	A
Lighting efficiency class	A
ECO motor	•
Grease filtering efficiency class	C
PowerManagement system	•
Annual energy consumption in kWh/year	25.1
Fluid dynamic efficiency class	A
Lighting efficiency class	A
Grease filtering efficiency class	C
Filter system	
Number of dishwasher-safe stainless steel grease filters (10-ply)	1
Lighting	
LED	•
Number x W	2 x 3 W
Light intensity in Lx	440 lx
Colour temperature in K	3500 Kelvin
Dimmer function	•
Fan	
Dual-action fan	•
DC motor	•
Exhaust air	
Air throughput in Level 1 (m^3/h) according to EN 61591	180
Air throughput in Level 2 (m^3/h) according to EN 61591	280
Air throughput in Level 3 (m^3/h) according to EN 61591	380

DA 6498 W Pure Black
Wall mounted cooker hood
with energy-efficient LED lighting and touch controls for simple operation.

EAN: 4002515961308 / Material number: 10805780 / Old Material Number: 28649840GB

Air throughput in Booster level (m^3/h) according to EN 61591	610
Sound power in Level 1 (dB(A) re 1 pW) according to EN 60704-3	37.0
Sound power in Level 2 (dB(A) re 1 pW) according to EN 60704-3	45.0
Sound power in Level 3 (dB(A) re 1 pW) according to EN 60704-3	53.0
Sound power in Booster level (dB(A) re 1 pW) acc. to EN 60704-3	64.0
Sound pressure in Level 1 (dB(A) re 20 µPa) according to EN 60704-2-13	22.0
Sound pressure in Level 2 (dB(A) re 20 µPa) according to EN 60704-2-13	31.0
Sound pressure in Level 3 (dB(A) re 20 µPa) according to EN 60704-2-13	38.0
Sound pressure in Booster level (dB(A) re 20 µPa) acc. to EN 60704-2-13	49.0
Recirculation	
Air throughput in Level 1 (m^3/h) according to EN 61591	110
Air throughput in Level 2 (m^3/h) according to EN 61591	190
Air throughput in Level 3 (m^3/h) according to EN 61591	330
Air throughput in Booster level 1 (m^3/h) according to EN 61591	490
Sound power in Level 1 (dB(A) re 1 pW) according to EN 60704-3	42.0
Sound power in Level 2 (dB(A) re 1 pW) according to EN 60704-3	51.0
Sound power in Level 3 (dB(A) re 1 pW) according to EN 60704-3	60.0
Sound power in Booster level 1 (dB(A) re 1 pW) acc. to EN 60704-3	69.0
Sound pressure in Level 1 (dB(A) re 20 µPa) according to EN 60704-2-13	28.0
Sound pressure in Level 2 (dB(A) re 20 µPa) according to EN 60704-2-13	36.0
Sound pressure in Level 3 (dB(A) re 20 µPa) according to EN 60704-2-13	46.0
Sound pressure in Booster level 1 (dB(A) re 20 µPa) acc. to EN 60704-2-13	54.0
Safety	
Safety switch-off	•
Single-ply safety glass (ESG)	•
Technical data	
Overall hood height for extraction mode and external in mm	550
Overall hood height for recirculation and external in mm	550
Overall height for vented and external in in. (mm)	550
Canopy width in mm	899
Overall height for extraction mode and external mode cooker hoods in mm	550
Canopy height in mm	550
Overall height for recirculation in in. (mm)	550
Canopy depth in mm	530
Overall height for recirculation mode cooker hoods in mm	550

DA 6498 W Pure Black
Wall mounted cooker hood
with energy-efficient LED lighting and touch controls for simple operation.

EAN: 4002515961308 / Material number: 10805780 / Old Material Number: 28649840GB

Minimum height above electric hobs in mm	450
Minimum height above gas hobs (max. 12.6 kW total power, burner ≤ 4.5 kW) in mm	650
Net weight in kg	25.0
Length of supply lead in m	1.5
Standard plug fitted	•
Hard-wired connection	•
Total rated load in kW	0.08
Voltage in V	230
Fuse rating in A	10
Number of phases	1
Frequency in Hz	50
Installation notes	
Extraction ducting connection at top	•
Extraction connection at top and rear	•
Diameter of exhaust duct in mm	150
Combination with WiFi-enabled Miele hob	recommended
Accessories included	
Non-return flap	•
Optional accessories	
Active charcoal filter	Ja
Active charcoal filter, can be reactivated	DKF 25-R
Chimney	DADC 6000

DA 6498 W Pure Black
Wall mounted cooker hood
with energy-efficient LED lighting and touch controls for simple operation.

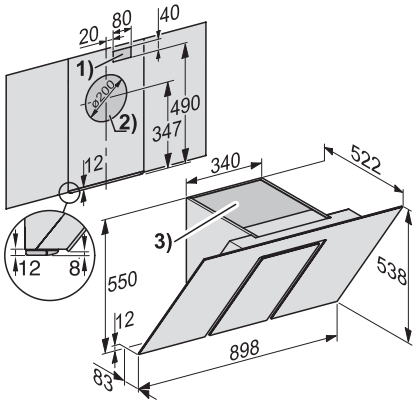

DA 6498 W (installation drawing)

1) Breakthrough, if the mains connection is not with mains plug but with fixed connection., 2) Breakthrough in air exhaust to the rear. Exhaust connection alternatively to the rear. , 3) Air outlet for recirculation. The distance to the ceiling or the top of the unit mounted furniture should be at least 300 mm.,