DA 1260
Built-under cooker hood
with energy-efficient LED lighting and sliding switch for simple operation.

- Puristic design – space-saving solution 598 mm wide
- Powerful – 545 m3/h in Booster level
- Efficient filtration- 10-ply stainless-steel grease filter
- Safe and easy to clean – Miele CleanCover
- Suitable for every home – for extraction or recirculation

EAN: 4002515792186 / Material number: 10568360 / Old Material Number: 28126055GB

Construction type	
Built-under hood	•
Construction type and design	
Colour	Stainless steel
Operating modes	
Type of air guide	Can be retrofitted
Active charcoal filter (order separately)	DKF 18-P
User convenience	
Mechanical controls	•
Power levels (number without Booster level)	3
Slide switch	•
Booster levels	1
Easy-to-clean canopy interior – CleanCover	•
Efficiency and sustainability	
Annual energy consumption in kWh/year	91.6
Energy efficiency class (A+++ – D)	C
Annual energy consumption in kWh/year	91.6
Fluid dynamic efficiency class	D
Lighting efficiency class	A
Grease filtering efficiency class	A
Filter system	
Number of dishwasher-safe stainless steel grease filters (10-ply)	2
Lighting	
LED	•
Number x W	2 x 3 W
Light intensity in Lx	330 lx
Colour temperature in K	3000 Kelvin
Fan	
Single-action blower	•
AC motor	•
Exhaust air	
Air throughput in Level 1 (m^3/h) according to EN 61591	275
Air throughput in Level 2 (m^3/h) according to EN 61591	315
Air throughput in Level 3 (m^3/h) according to EN 61591	355
Air throughput in Booster level (m^3/h) according to EN 61591	545
Sound power in Level 1 (dB(A) re 1 pW) according to EN 60704-3	57.0
Sound power in Level 2 (dB(A) re 1 pW) according to EN 60704-3	60.0
Sound power in Level 3 (dB(A) re 1 pW) according to EN 60704-3	64.0
Sound power in Booster level (dB(A) re 1 pW) acc. to EN 60704-3	74.0
Sound pressure in Level 1 (dB(A) re 20 µPa) according to EN 60704-2-13	43.0
Sound pressure in Level 2 (dB(A) re 20 µPa) according to EN 60704-2-13	47.0
Sound pressure in Level 3 (dB(A) re 20 µPa) according to EN 60704-2-13	50.0

DA 1260
Built-under cooker hood
with energy-efficient LED lighting and sliding switch for simple operation.

EAN: 4002515792186 / Material number: 10568360 / Old Material Number: 28126055GB

Sound pressure in Booster level (dB(A) re 20 µPa) acc. to EN 60704-2-13	60.0
Recirculation	
Air throughput in Level 1 (m^3/h) according to EN 61591	165
Air throughput in Level 2 (m^3/h) according to EN 61591	180
Air throughput in Intensive level (m^3/h) according to EN 61591	220
Air throughput in Level 3 (m^3/h) according to EN 61591	195
Sound power in Level 1 (dB(A) re 1 pW) according to EN 60704-3	71.0
Noise power level in Intensive level (dB(A) re 1 pW) according to EN 60704-3	75.0
Sound power in Level 2 (dB(A) re 1 pW) according to EN 60704-3	72.0
Sound power in Level 3 (dB(A) re 1 pW) according to EN 60704-3	73.0
Sound pressure in Level 1 (dB(A) re 20 µPa) according to EN 60704-2-13	57.0
Sound pressure in Level 2 (dB(A) re 20 µPa) according to EN 60704-2-13	58.0
Sound pressure in Level 3 (dB(A) re 20 µPa) according to EN 60704-2-13	59.0
Noise pressure level in Intensive level (dB(A) re 20 µPa) according to EN 60704-2-13	62.0
Technical data	
Canopy width in mm	598
Canopy height in mm	125
Canopy depth in mm	500
Minimum height above electric hobs in mm	450
Net weight in kg	11.2
Length of supply lead in m	1.5
Standard plug fitted	•
Minimum safety distance above gas hobs (max. 12.6 kW total power, burner ≤ 4.5 kW) in mm	650
Total rated load in kW	0.23
Voltage in V	230
Fuse rating in A	10
Number of phases	1
Frequency in Hz	50
Installation notes	
Extraction ducting connection at top	•
Diameter of exhaust duct in mm	150
Fitting template	•
Accessories included	
Deflector for recirculation	•
Non-return flap	•

DA 1260
Built-under cooker hood
with energy-efficient LED lighting and sliding switch for simple operation.

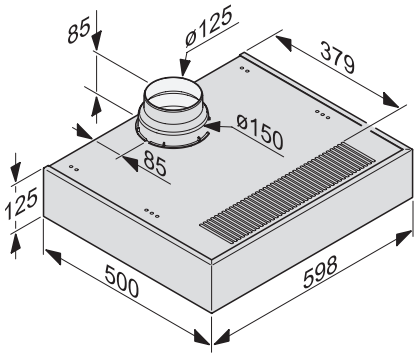

DA 1060, DA 1160, DA 1260 (Installation drawing)