ABLG 202
External motor
can be installed inside (e.g. an internal ceiling space)

EAN: 4002513483819 / Material number: 06029260 / Old Material Number: 28996224D

- Relocation of fan to another room
- Dual-action fan
- Exhaust duct 125/150 mm diameter
- Fan connection to the hood via connector plug
- Fan power: Unrestricted air throughput 280-900 m3/h

ABLG 202
External motor
can be installed inside (e.g. an internal ceiling space)

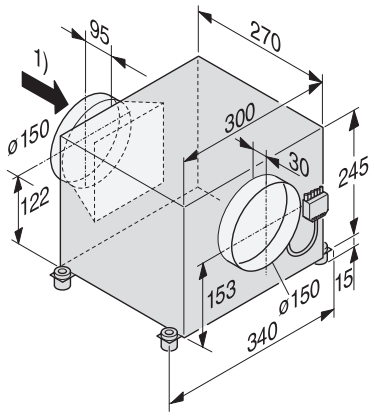

ABLG202 (installation drawing)

1) Air suctioning