Miele

DAD 4841 Black Levantar
Downdraft extractor system
in an elegant obsidian black design and with intuitive SmartControl operation

- 916 mm wide – the perfect combination with panorama hobs
- Easy recirculation mode installation with plug&play accessory set
- Motorised retractable deflector plate – Hood in Motion
- Unique user convenience – Con@ctivity
- Efficient filtration- 10-ply stainless-steel grease filter

EAN: 4002516761679 / Material number: 12440700 / Old Material Number: 28D4841MGB

Construction type	
Downdraft extractor system	•
Construction type and design	
Colour	Obsidian black
Operating modes	
Type of air guide	Can be retrofitted
Active charcoal filter (order separately)	DKF 30-P, DKF 30-R
Design	
Edge extraction	•
User convenience	
Miele@home	•
Automatic function Con@ctivity	•
Electronic controls	•
Touch-on-glass controls	•
Run-on time 5/15 min.	•
Booster levels	1
Programmable Booster level switch-off	•
Grease filter saturation indicator	•
Active charcoal filter saturation indicator	•
Motor-operated cooker hoods	•
Easy-to-clean canopy interior – CleanCover	•
Efficiency and sustainability	
Energy efficiency class (A+++ – D)	A
ECO motor	•
PowerManagement system	•
Annual energy consumption in kWh/year	41,6
Fluid dynamic efficiency class	A
Lighting efficiency class	A
Grease filtering efficiency class	B
Filter system	
Number of dishwasher-safe stainless steel grease filters (10-ply)	2
Lighting	
LED	•
Number x W	1 x 11,2 W
Light intensity in Lx	400 lx
Colour temperature in K	3500 Kelvin
Dimmer function	•
Fan	
Dual-action blower	•
DC motor	•
Exhaust air	
Air throughput in booster level 2 (m^3/h)	640
Sound power in Level 1 (dB(A) re 1 pW) according to EN 60704-3	44,0
Sound power in Level 2 (dB(A) re 1 pW) according to EN 60704-3	57,0
Sound power in Level 3 (dB(A) re 1 pW) according to EN 60704-3	62,0
Sound power in Booster level (dB(A) re 1 pW) acc. to EN 60704-3	70,0

DAD 4841 Black Levantar
Downdraft extractor system
in an elegant obsidian black design and with intuitive SmartControl operation

EAN: 4002516761679 / Material number: 12440700 / Old Material Number: 28D4841MGB

Sound power in Booster level 2 (dB(A) re 1 pW) acc. to EN 60704-3	72,0
Sound pressure in Level 1 (dB(A) re 20 µPa) according to EN 60704-2-13	30,0
Sound pressure in Level 2 (dB(A) re 20 µPa) according to EN 60704-2-13	43,0
Sound pressure in Level 3 (dB(A) re 20 µPa) according to EN 60704-2-13	49,0
Sound pressure in Booster level (dB(A) re 20 µPa) acc. to EN 60704-2-13	56,0
Sound pressure in Booster level 2 (dB(A) re 20 µPa) acc. to EN 60704-2-13	58,0
Recirculation	
Air throughput in Booster level 2 (m^3/h) according to EN 61591	555
Sound power in Level 1 (dB(A) re 1 pW) according to EN 60704-3	50,0
Noise power level in Intensive level (dB(A) re 1 pW) according to EN 60704-3	75,0
Sound power in Level 2 (dB(A) re 1 pW) according to EN 60704-3	64,0
Sound power in Level 3 (dB(A) re 1 pW) according to EN 60704-3	69,0
Sound power in Booster level 2 (dB(A) re 1 pW) acc. to EN 60704-3	76,0
Sound pressure in Level 1 (dB(A) re 20 µPa) according to EN 60704-2-13	37,0
Sound pressure in Level 2 (dB(A) re 20 µPa) according to EN 60704-2-13	50,0
Sound pressure in Level 3 (dB(A) re 20 µPa) according to EN 60704-2-13	56,0
Noise pressure level in Intensive level (dB(A) re 20 µPa) according to EN 60704-2-13	61,0
Sound pressure in Booster level 2 (dB(A) re 20 µPa) acc. to EN 60704-2-13	62,0
Safety	
Safety switch-off	•
Single-ply safety glass (ESG)	•
Technical data	
Standard plug fitted	•
Total rated load in kW	0,25
Voltage in V	230
Fuse rating in A	10
Number of phases	1
Frequency in Hz	50
Installation notes	
Bottom exhaust duct	•
Optimum combination with hob subject to availability	KM 7689 FL; KM 7684 FL

DAD 4841 Black Levantar
Downdraft extractor system
in an elegant obsidian black design and with intuitive SmartControl operation

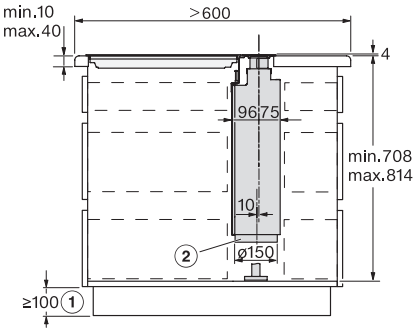

DAD4840, DAD4940, DAD4841, DAD4941 - surface mounted, AP > 600 mm – side view – Installation drawings

Only required if flat ducts are laid under the cabinets or the DUU 600 recirculation box is used., Exhaust air connection Ø 150 millimetres.

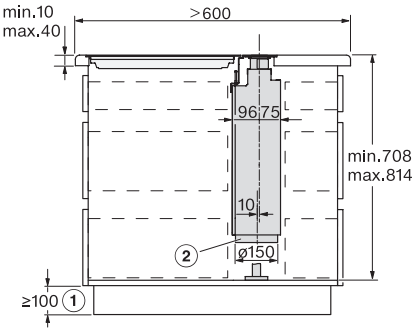

DAD4840, DAD4940, DAD4841, DAD4941 - flush – side view – Installation drawings

Only required if flat ducts are laid under the cabinets or the DUU 600 recirculation box is used., Exhaust air connection Ø 150 millimetres.

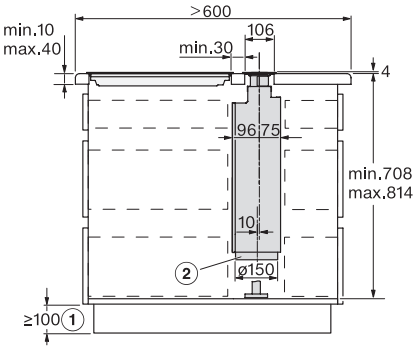

DAD4840, DAD4940, DAD4841, DAD4941 - surface mounted, AP > 600 mm – side view – Installation drawings

Only required if flat ducts are laid under the cabinets or the DUU 600 recirculation box is used., Exhaust air connection Ø 150 millimetres.

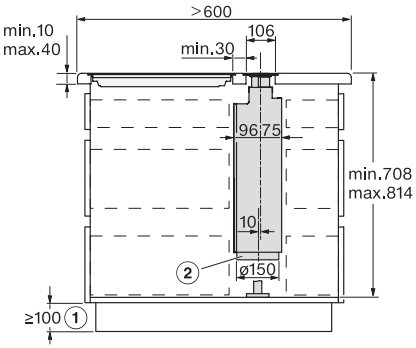

DAD4840, DAD4940, DAD4841, DAD4941 - flush – side view – Installation drawings

Only required if flat ducts are laid under the cabinets or the DUU 600 recirculation box is used., Exhaust air connection Ø 150 millimetres.

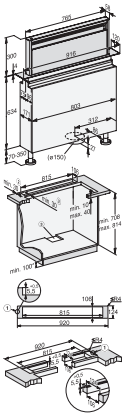

DAD4841, Installation drawings

1. Stepped cutout for flush-fit installation in stone worktops (granite, marble)., 2. Ensure that materials are sufficiently stable., 3. Cut-out off-centre., Exhaust duct Ø 150 mm., * Only required when flat ducting is laid under cabinets or the DUU 600 recirculation box is used.

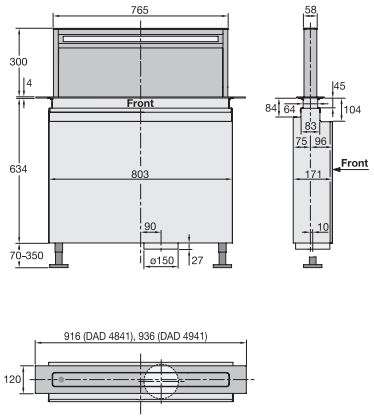

DAD4841, DAD4941, Installation drawings

DAD 4841 Black Levantar
Downdraft extractor system
in an elegant obsidian black design and with intuitive SmartControl operation

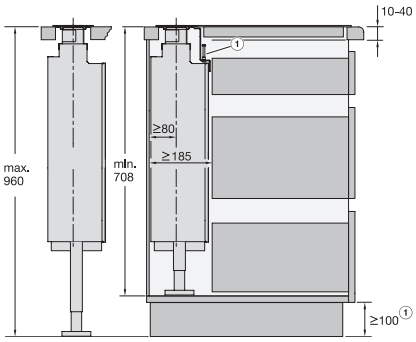

DAD4841, DAD4941, Installation drawings

The minimum dimension is required if flat ducts are laid under the cabinets or the DUU 600 recirculation box is used.

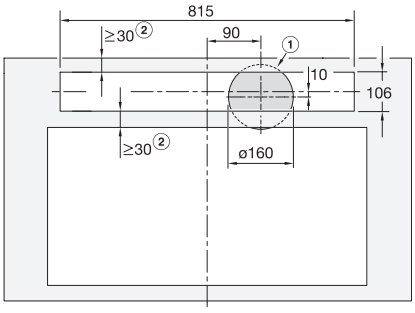

DAD4841, DAD4941, overlying, Installation drawings

Installation of the downdraft hood and cooktop in separate cutouts., Surface-mounted installation, 1) Cutout for exhaust air line in cabinet base., 2) Ensure sufficient stability of the worktop., Exhaust air connection ø150 mm

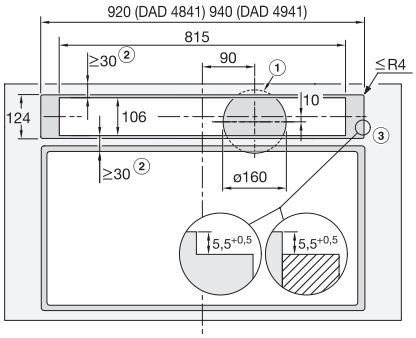

DAD4841, DAD4941, flush, Installation drawings

Installation of the downdraft hood and cooktop in separate cutouts., Flush installation., 1) Cut-out for exhaust air duct in the cabinet base., 2) Ensure sufficient stability of the worktop., 3) Step milling for flush mounting in a countertop. Note the, the different milling widths for the hob and the downdraft. Instead of a step milling, a wooden strip offset 5.5 mm downwards can be installed as an alternative (not included in the scope of delivery)., , Exhaust air connection ø 150 mm.

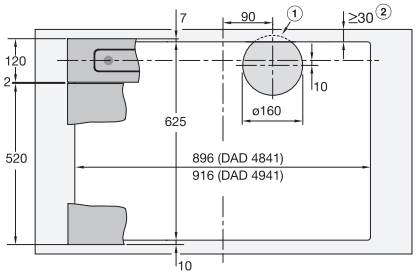

DAD4841, DAD4941, surface mounted installation, common cutout, Installation drawings

Side-by-side installation of the downdraft hood and the cooktop in a common cutout., Example: combination with KM 7697 FL or KM 7594 FL., Surface-mounted installation, 1) Cut-out for exhaust air line in cabinet base., 2) Ensure sufficient stability of the worktop., , Exhaust air connection ø150 mm.

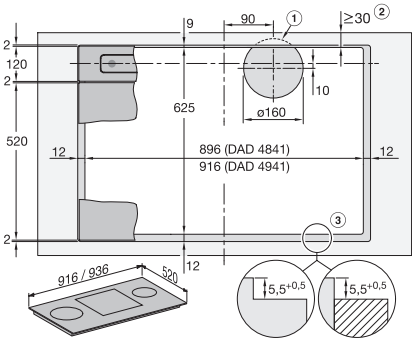

DAD4841, DAD4941, flush, Installation drawings

Side-by-side installation of the downdraft hood and the cooktop in a common cutout., Example: combination with KM 7697 FL or KM 7594 FL., Flush installation, 1) Cut-out for exhaust air duct in the cabinet base., 2) Ensure sufficient stability of the worktop., 3) Step milling for flush mounting in a worktop. Note the, the different milling widths for the hob and the downdraft. , Instead of a step milling, a 5.5 mm downwardly offset wooden strip can be installed (not included in the scope of delivery)., , Exhaust air connection ø 150 mm.

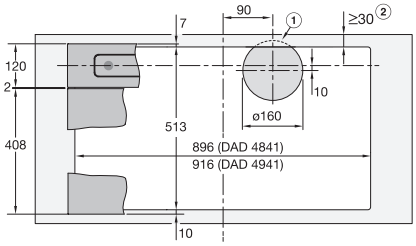

DAD4841, DAD4941, surface mounted installation, common cutout, Installation drawings

Side-by-side installation of the downdraft hood and the cooktop in a common cutout., Example: combination with KM 7684 FL or KM 7689 FL., Surface mounted installation, 1) Cut-out for exhaust air line in cabinet base., 2) Ensure sufficient stability of the worktop., , Exhaust air connection ø150 mm.

DAD 4841 Black Levantar
Downdraft extractor system
in an elegant obsidian black design and with intuitive SmartControl operation

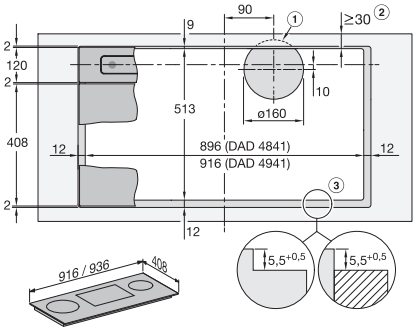

DAD4841, DAD4941, flush, Installation drawings

Side-by-side installation of the downdraft hood and the cooktop in a common cutout., Example: combination with KM 7697 FL or KM 7594 FL., Flush installation, 1) Cut-out for exhaust air duct in the cabinet base., 2) Ensure sufficient stability of the worktop., 3) Step milling for flush mounting in a worktop. Note the, the different milling widths for the hob and the downdraft. , Instead of a step milling, a 5.5 mm downwardly offset wooden strip can be installed (not included in the scope of delivery)., , Exhaust air connection ø 150 mm.

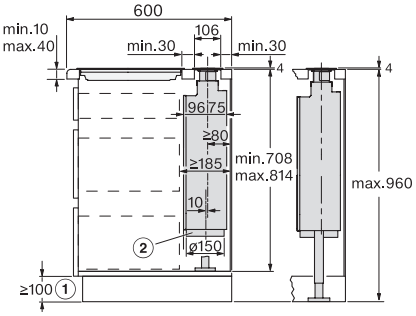

DAD4841, DAD4941, overlying – AP600 mm, Side view, Installation drawings

Only required when flat ducting is laid under cabinets or the DUU 600 recirculation box is used., Exhaust duct Ø 150 mm.

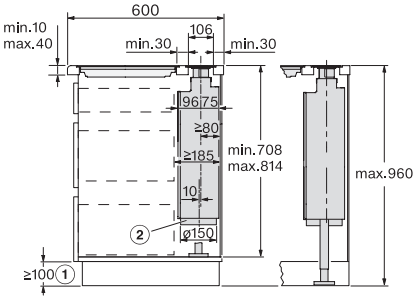

DAD4841, DAD4941, flush – AP600 mm, Side view, Installation drawings

Only required when flat ducting is laid under cabinets or the DUU 600 recirculation box is used., Exhaust duct Ø 150 mm.

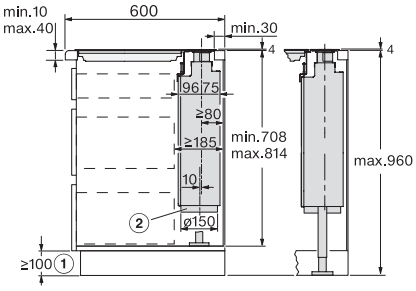

DAD4841, DAD4941, overlying – AP600 mm, common cutout, Installation drawings

Only required when flat ducting is laid under cabinets or the DUU 600 recirculation box is used., Exhaust duct Ø 150 mm.

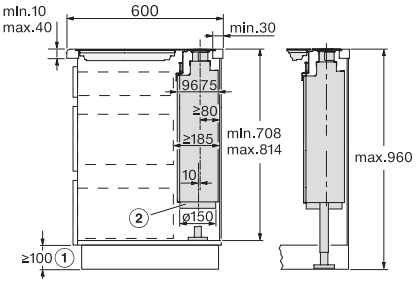

DAD4841, DAD4941, flush – AP600 mm, common cutout, Installation drawings

Only required when flat ducting is laid under cabinets or the DUU 600 recirculation box is used., Exhaust duct Ø 150 mm.