TWF760WP EcoSpeed&8kg
T1 heat-pump dryer:
with A+++ and DryCare 40 for efficient yet gentle drying.

- Save time sorting your laundry; DryCare 40 is perfect for a 40 °C wash*
- EcoSpeed efficiently reduces the drying time by 20 minutes**
- FragranceDos²ensures that your laundry smells fresh after drying***
- EcoDry ensures efficient performance over the entire tumble dryer service life
- Complete app control of your tumble dryer with Miele@home****

* Not suitable for woollens or silks.

** Compared to Miele tumble dryers without EcoSpeed with the same load size and energy efficiency class. Tested in the "Cottons" programme with a full load size.

*** Patent EP 2 431 516

**** Additional digital offer from Miele & Cie. KG. All smart applications are made possible with the Miele@home system. The range of functions can vary depending on the model and the country.

EAN: 4002516476320 / Material number: 11871870 / Old Material Number: 12WF7602GB

Construction type	
Suitable for stacking	•
Side-by-side	•
Slot-in	•
Door hinge	left, Reversible
Convertible door hinging	•
Model	
Product brand	T1 White Edition
Heat pump dryer	•
Design	
Appliance colour	Lotus white
Control panel colour	Lotus white
Door design	Obsidian black with chrome ring
Rotary selector colour	Lotus White / Chrome ring
Control panel version	5° inclined
Control type	Rotary control
Display	DirectSensor white, 7 segment
Drying results	
PerfectDry precision drying	•
FragranceDos² fragrance system	•
Intelligent drum reversal	•
Proven hygiene	•
Proven virus hygiene	•
Gentle laundry care	
Honeycomb drum	•
Load in kg	8,0
User convenience	
Networking with Miele@home	•
Wash2Dry	•
Delay start up to 24 hours	•
Time left display	•
Programme sequence indicator	No
Drum lighting	LED
Condensate container	•
Integrated condensed water drainage	•
AddLoad	•
Efficiency and sustainability	
Energy efficiency class (A+++ – D)	A+++
Annual energy consumption in kWh	161
Duration in minutes in the standard programme	165
Noise in the Cottons programme with full load in db(A) re 1 pW	66
Condensation efficiency class	A
Energy consumption in kWh in the Cottons Normal dry standard programme with a full load	1,32
EcoDry technology	•
Maintenance-free heat exchanger	•
ProfiEco motor	•
EcoSpeed	•

TWF760WP EcoSpeed&8kg
T1 heat-pump dryer:
with A+++ and DryCare 40 for efficient yet gentle drying.

EAN: 4002516476320 / Material number: 11871870 / Old Material Number: 12WF7602GB

Drying programmes	
Cottons (coloureds)	•
Cottons arrow	•
Minimum iron	•
Delicates	•
Shirts	•
Woollens handcare	•
Express	•
Proofing	•
Bed linen	•
Warm air/DryFresh	•
Drying extras	
Anti-crease	•
Buzzer	•
DryCare 40	•
Quality	
Soft ribs	•
Safety	
PIN-Code	•
Empty out container indicator	•
Clean filter indication	•
Optical interface	•
Technical data	
Dimensions in mm (width)	596
Dimensions in mm (height)	850
Dimensions in mm (depth)	643
Appliance depth in mm with opened door	1077
Weight in kg	56
Total rated load in kW	1,10
Voltage in V	220-240
Fuse rating in A	13
Frequency in Hz	50
Length of supply lead in m	2,0
Hermetically sealed	•
Type of coolant	R290
Refrigerant quantity in kg	0,14
Refrigerant global warming potential in CO_2 e	3
Appliance global warming potential in CO_2 e	0,42
Replacing lamps	Service
Accessories included	
Fragrance flacon	•
Voucher for a second fragrance flacon	•

TWF760WP EcoSpeed&8kg
T1 heat-pump dryer:
with A+++ and DryCare 40 for efficient yet gentle drying.

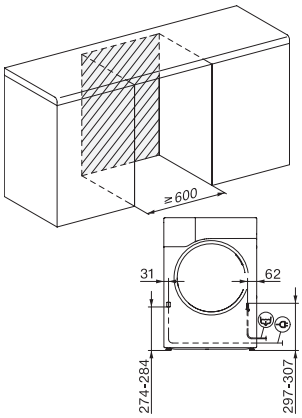

T1 installation drawing, facia 5 degree, measures in mm

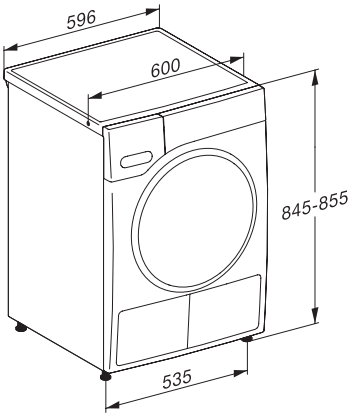

T1 drawing, facia 5 degree, measures in mm

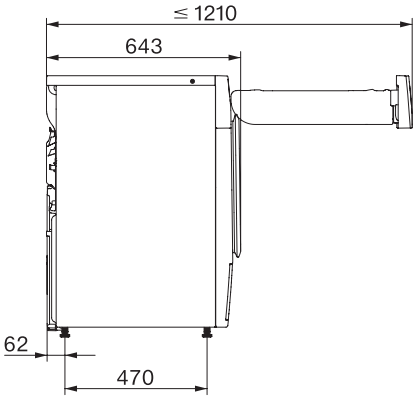

T1 drawing, facia 5 degree, with porthole, measures in mm

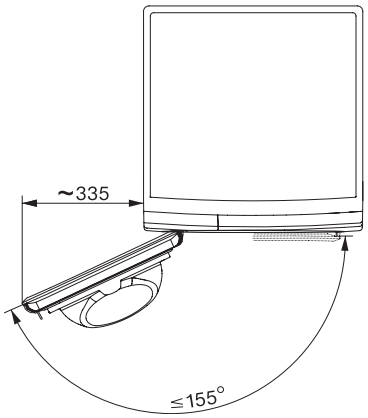

T1 drawing, facia 5 degree, measures in mm