DUU 1000-1
Recirculation conversion kit for CSDA 10x0 / CSDA 7xxx FL / KMDA 7xxx
for converting a downdraft extractor from extraction to recirculation mode.

EAN: 4002515837283 / Material number: 10647600 / Old Material Number: 28996381D

- Installation in plinth heights from 100 mm
- Extraction connection for flat ducting to the left, right or back
- including Longlife AirClean filter can be regenerated
- Uniform airflow in recirculation mode
- Reduces airflow noises

DUU 1000-1

Recirculation conversion kit for CSDA 10x0 / CSDA 7xxx FL / KMDA 7xxx
for converting a downdraft extractor from extraction to recirculation mode.

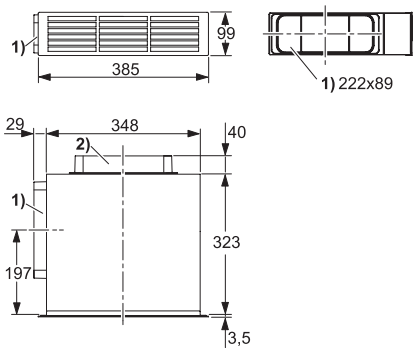


DUU 1000 (installation drawing)

1) Extraction Connection to the left or right , 2) Extraction Connection alternatively to the back, Extraction Connection for flat ducting system 222 x 89 mm , 3) Cutout dimension in the plinth strip 350 x 98 mm