UBS G 60-1
Dishwasher building-under kit
for the perfect installation of a built-under freestanding dishwasher.

EAN: 4002513771022 / Material number: 06390810 / Old Material Number: 21995166D

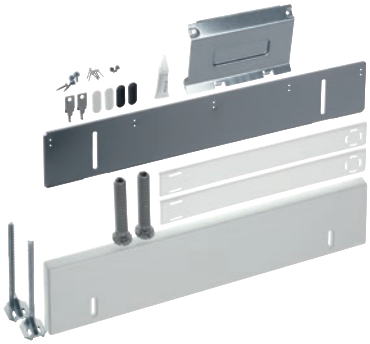

- 1 appliance with 2 installation options for customisation
- Contents: Slides, height-adjustable plinth and steam protector
- Suitable for Miele freestanding dishwashers up to Generation 6000