Miele

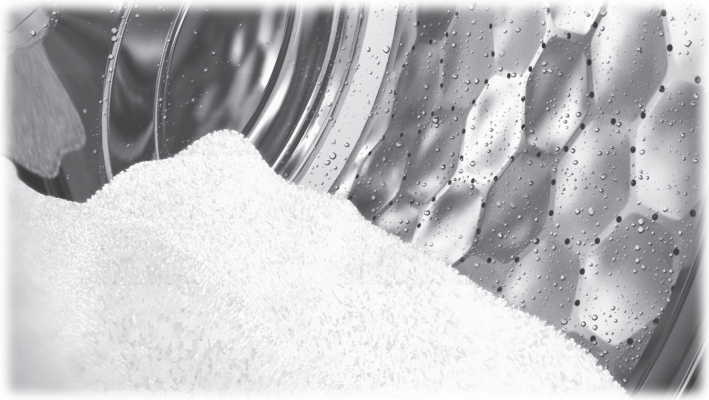

Operating and installation instructions
Commercial washing machine
PWM 509 SOM
PWM 511 SOM

Always read the operating instructions before setting up, installing and commissioning the machine. This prevents both personal injury and damage to the machine.

en-GB

M.-Nr. 12 282 010

Contents

Caring for the environment 6
Disposing of your old machine 6

Warnings and safety notes 7
Explanation of the safety notes and warnings on the machine 7
Appropriate use 8
Foreseeable misuse 10
Technical safety 11
Correct use 13
Chlorine and component damage 15
Accessories 16
Disposing of your old machine 16

Description of the machine 17
Description of the machine 17
Control panel 18

Operation 19
Sensor controls and touch display 19
Main menu 19
Examples of how to operate the machine 20
Operating a launderette machine 23

Washing 24
Preparing for use 24
Emptying pockets 24
Sorting laundry 24
Pre-treating stains 24
General tips 24
Loading and switching on the washing machine 24
Loading the washing machine 24
Washing with detergent drawer 27
Adding detergent using the detergent drawer 27
Adding fabric conditioner or liquid starch separately 27
Adding starch separately 27
Dyes, dye removers and descalers 27
Detergent dispensing 28
Selecting a programme 29
Selecting programme settings 30
Selecting Extras 33
Pre-wash 33
Soak 33
Rinse plus 33
Rinse hold 33
Filling stop 33
Intensive 33
Water plus 33
Programme start – programme end 34
Timer 35

Special features in the programme sequence 36
Spinning 36
Anti-crease 36

Changing the programme sequence ... 37
Changing a programme ... 37
Altering the wash programme ... 37
Cancelling a programme ... 37
Switching on the washing machine after an interruption to the power supply ... 37
Adding or removing laundry ... 38

Problem solving guide ... 39
Troubleshooting ... 39
Customer Service Department ... 40
Problem solving guide ... 40
The wash programme does not start ... 40
Programme cancellation and fault message ... 42
A fault message appears in the display ... 43
Insufficient wash results ... 44
General problems with the washing machine ... 45
The door will not open ... 46
Opening the door in the event of a blocked drain outlet and/or power cut ... 46

Cleaning and care ... 49
Build-up of rust ... 49
Cleaning the detergent drawer, detergent compartments and siphons ... 50
Cleaning the water inlet filters ... 51

Installation ... 53
Installing the washing machine ... 53
Securing the machine ... 53
Installing the machine on ships ... 53
General operating conditions ... 53
For easy maintenance ... 55
PWM 509 ... 55
PWM 511 ... 56
Installing the washing machine ... 57
Installation on a plinth ... 57
Transit bars ... 58
Levelling the machine ... 60
Water connection ... 61
Cold water connection ... 62
Using the machine in cold water mode ... 62
Hot water connection ... 62
Using the machine in hot water mode ... 62
Electrical connection ... 64
Reference to external machines ... 64
Optional accessories ... 64
Connector Box ... 64
WiFi/LAN interface ... 66
Plinth (APWM037/038/039) ... 66

Supervisor level ... 67
Opening the supervisor level ... 67
Code-based access ... 67
Changing the code ... 67
Closing the Settings menu ... 67

Contents

Operation/display ... 68
Language ... 68
Language access ... 68
Set languages ... 68
Display brightness ... 68
Time ... 69
Date ... 69
Volume ... 69
Visibility parameters ... 69
Appliance off status ... 69
Delay start ... 69
Memory ... 70
Change order ... 70
Temperature unit ... 70
Weight unit ... 70
Supervisor code ... 70
WiFi ... 70
Programme selection ... 71
Controls ... 71
Programme packages ... 72
Favourite programmes ... 72
Sort programmes ... 72
Prog. colour allocation ... 72
Expert code ... 72
Process technology ... 73
Anti-crease ... 73
Automatic drainage ... 74
Service ... 74
Service interval ... 74
External applications ... 74
Payment system lock ... 74
Connector box ... 74
Automatic dispensing ... 74
Dosage ... 74
Peak load prevention ... 75
Appliance parameters ... 75
Maximum spin speed ... 75
Max. possible temperature ... 75
Legal information ... 75

Technical data ... 76
PWM 509/511 machine data ... 76
Electrical connection ... 76
PWM 509 installation dimensions ... 76
PWM 511 installation dimensions ... 76
Weight and floor load ... 76
Emission values ... 76
WiFi ... 76
UK declaration of conformity ... 77
Product safety ... 77
EU declaration of conformity ... 77

WiFi data protection 78
Data protection and data security 78
Factory default settings for network configuration 78
Copyright and licences 78

Disposal of the packaging material

The packaging is designed to protect the washing machine against transport damage. The packaging materials used are selected from materials which are environmentally friendly for disposal and can therefore be recycled.

Recycling the packaging material reduces the use of raw materials in the manufacturing process and also reduces the amount of waste in landfill sites. Your dealer will take the packaging material away.

Disposing of your old machine

Old electrical and electronic machines often contain valuable materials. However, they also contain harmful substances which were essential for their correct functioning and safety. These could be hazardous to human health and to the environment if disposed of with household waste or if handled incorrectly. Please do not, therefore, dispose of your old machine with household waste.

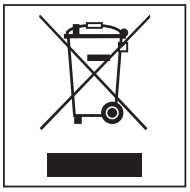

Please dispose of it at your local community waste collection/recycling centre. Consult your dealer if necessary. Please ensure that your old machine poses no risk to children while being stored for disposal.

Energy saving tips

Energy and water consumption

- To get the most out of your machine, load the **maximum** dry load size for the wash programme you are using.
  Energy and water consumption is most efficient when a full load is washed.

Detergent

- Do not exceed the amounts of detergent recommended by the manufacturer on the packaging.
- Reduce the amount of detergent for smaller load sizes.

When drying with a tumble dryer

Select the highest possible spin speed for the wash programme to save energy in the subsequent tumble dryer cycle.

Original operating instructions

Explanation of the safety notes and warnings on the machine

	Read the operating instructions
	Read all the instructions, e.g. the installation instructions
	Warning, hot surfaces
	Warning, voltage up to 1000 volts
	Earthing
	Equipotential bonding

This washing machine complies with all current local and national safety requirements. Inappropriate use can, however, lead to personal injury and material damage.

Read the operating instructions carefully before using the washing machine. They contain important information on safety, installation, use and maintenance. This prevents both personal injury and damage to the washing machine.

Miele expressly and strongly advises that you read and follow the instructions in the section on installing the washing machine as well as the safety notes and warnings.

Miele cannot be held liable for injury or damage caused by non-compliance with these instructions.

Keep these operating instructions in a safe place and pass them on to any future owner.

When instructing other people how to use the washing machine, they must be made aware of these safety notes and warnings.

Appropriate use

▶ The washing machine is only suitable for washing fabrics with a care label stating that they are suitable for machine washing. Any other applications may be dangerous. The manufacturer cannot be held liable for damage resulting from incorrect or improper use or operation of the machine.

▶ This washing machine must be used as described in the operating instructions and must be checked on a regular basis to make sure it is functioning correctly. Maintenance must be carried out when necessary.

▶ The washing machine is not suitable for outdoor use.

▶ Do not install the washing machine in a room where there is a risk of frost. Frozen hoses are at risk of tearing or bursting. The reliability of the electronic module may be impaired at temperatures below freezing point.

▶ This washing machine is intended only for use in a commercial environment.

▶ The machine may only be operated when the following conditions are met:

- The ship's hull is longer than 24 metres.
- The list of the vessel is not more than 2°.
- Any external vibration is no more than 150 Hz at an amplitude of 0.35 mm.

  The safe operation and correct functioning of the machine can only be guaranteed if the above conditions are met.

▶ The machine must not be operated on an open deck.

▶ Machines that do not carry the "CSA C/US" safety mark comply with European safety regulations.
These machines must not be operated in the USA.

▶ This machine must only be installed by a qualified specialist who has made sure that the conditions for its safe use are met.

▶ When installing this machine, it must be securely fixed to the floor. Failure to do this could result in personal injury, damage to the machine and damage to other objects and installations.

▶ The use of industrial laundry machines on vessels operating on inland waterways and within the 3-mile zone is only permitted if the machine is approved for the country or countries in question. This does not affect use on vessels in international waters, including seaports.

▶ If the machine is used in a commercial environment it may only be operated by instructed/trained personnel. If the machine is used in a publicly accessible area, the supervisor must ensure that it can be operated safely without risk of danger.

▶ This washing machine can only be used by people with reduced physical, sensory or mental capabilities, or lack of experience or knowledge, if they are supervised whilst using it or have been shown how to use it in a safe way and understand and recognise the consequences of incorrect operation.

▶ Children under the age of 8 must not be allowed near the washing machine unless they are constantly supervised.

▶ Children over the age of 8 may only use the washing machine without supervision if its operation has been clearly explained to them and they are able to use it safely. Children must be able to understand and recognise the possible dangers caused by incorrect operation.

▶ Children may not carry out cleaning or maintenance on the washing machine unsupervised.

▶ Always supervise any children in the vicinity of the washing machine. Never allow children to play with the washing machine.

▶ Disinfection programmes must not be interrupted, as this can have a limiting effect on the disinfection result. It is the operator's responsibility to ensure that the standard of disinfection in thermal as well as chemo-thermal procedures is maintained by carrying out suitable validation tests.

Foreseeable misuse

▶ Never use solvent-based cleaning agents, e.g. those containing benzine, in this machine. Doing so may result in damage to component parts and create toxic steam and fumes. **Risk of fire and explosion!**

▶ When washing with high temperatures, remember that the porthole glass becomes hot. Do not let children touch it during the wash process.
Danger of burning!

▶ Close the drum door after each wash cycle. This is to avoid the risk of children trying to climb into the washing machine or hide things in it, and animals getting into the machine.

▶ Do not damage, remove or bypass the safety features or control elements of this washing machine.

▶ Machines with a damaged control panel, wires or cables must not be used until they have been repaired.

▶ Water used for washing in this machine consists of suds and is not drinking water! Drain the suds into a proper drainage system.

▶ Always make sure that the drum is stationary before reaching in to remove laundry. Reaching into a moving drum is extremely dangerous.

▶ Be careful not to put your hands in the gap between door and frame when closing the drum door.
Please note: the drum door is locked automatically as soon as the washing machine starts.

▶ It is particularly important to follow the manufacturer's instructions when using a combination of cleaning agents and special application products. Products must only be used for applications approved by the manufacturer to avoid any material damage or the occurrence of strong chemical reactions.

Technical safety

▶ Before setting up the washing machine, check it for any externally visible damage. Do not install or use a damaged washing machine.

▶ The electrical safety of this washing machine can only be guaranteed when correctly earthed. It is most important that this basic safety requirement is tested and in case of any doubt the on-site wiring system should be inspected by a specialist. Miele cannot be held liable for the consequences of an inadequate earthing system.

▶ Unauthorised repairs could result in unforeseen dangers for the user, for which the manufacturer cannot accept liability. Repairs should only be undertaken by a Miele authorised technician, otherwise any subsequent damage will not be covered by the warranty.

▶ Do not make any alterations to the washing machine, unless authorised to do so by Miele.

▶ Disconnect the washing machine from the power supply in the event of a fault and for cleaning and maintenance. The washing machine is only electrically disconnected from the power supply when:

- the plug of the washing machine is unplugged, or
- the mains fuse is disconnected, or
- the screw-in fuse has been completely removed

For more information, see “Installation – Electrical connection”.

▶ The washing machine may only be connected to the water supply using the set of hoses supplied with the machine. Old sets of hoses must not be re-used. Check the sets of hoses regularly for signs of wear. Change the sets of hoses in good time to avoid the risk of leaks and subsequent water damage.

▶ The cause of any leaks must be dealt with before the washing machine is restarted. Disconnect the washing machine immediately if any water leaks out.

▶ Faulty components must only be replaced by genuine Miele spare parts. Miele can only guarantee the safety standards of the machine when Miele spare parts are used.

▶ All relevant national provisions and regulations (DGUV in Germany) relating to accident insurance are applicable to this machine. It is recommended to carry out testing in accordance with the regulatory framework described in DGUV 100-500/Chapter 2.6/Section 4. The test book required for the documentation is available from the Miele Customer Service Department.

▶ Please observe the instructions in “Installation and connection” and “Technical data”.

▶ The plug for the washing machine must always be kept accessible so that the machine can be easily disconnected from the power supply.

▶ For hard-wired machines, an all-pole means of deactivation must be provided on site.

▶ If the machine is to be hard-wired, there must be a means of disconnecting all poles from the power supply. The mains isolator must be close to the washing machine and be clearly identifiable, unhindered and easily accessible at all times.

Correct use

▶ The maximum load size for PWM 509 is 9.0 kg of dry laundry. The maximum load size for PWM 511 is 11.0 kg of dry laundry.

See the “Programme chart” for the maximum recommended load sizes for individual programmes.

▶ Before using the washing machine for the first time, check that the transit bars have been removed (see “Installation – Removing the transit bars”). During spinning, transit bars which are still in place may result in damage to both the washing machine and adjacent furniture or machines.

▶ Never try to open the drum door of the washing machine using force. The door can only be opened when a corresponding message appears in the display.

▶ Do not push the suspended drum unit while the machine is running.

▶ When closing the door there is a danger of crushing and shearing between the door frame and the drum opening and also at the hinges.
Caution: the drum door locks automatically when the machine is started.

▶ Close the stopcock if the washing machine is to be left for any length of time (e.g. while on holiday), especially if there is no floor drain (gully) in the immediate vicinity.

▶ Take care to ensure that foreign objects (e.g. nails, pins, coins, paper clips) do not find their way into the machine with the laundry. Foreign objects may damage components of the machine (e.g. suds container, drum). Damaged components can damage the laundry.

▶ If the correct amount of detergent is dispensed, the washing machine should not need to be descaled. If, however, you do wish to descale your washing machine, only use proprietary non-corrosive descaling agents. Special descaling agent is available from your Miele dealer or from the Miele Customer Service Department. Strictly observe the instructions for the descaler.

▶ Textiles which have been pre-treated in solvent-based cleaning agents must be rinsed in clean water before being washed in the machine. Note that solvent residues may only be discharged into waste water in compliance with local legislation.

▶ Never use solvent-based cleaning agents, e.g. those containing benzine, in this machine. Doing so may result in damage to component parts and create toxic steam and fumes. **Risk of fire and explosion!**

▶ Do not store or use petrol, paraffin or any easily flammable substances near the washing machine. Do not use the machine lid as storage space.
Risk of fire and explosion!

▶ Do not store chemicals (liquid detergents, additives) on the machine lid. They may cause discolouration or lacquer damage. Accidently spilled chemicals should be removed from the surface immediately with a wet cloth.

▶ Only use dyes, dye removers and descalers suitable for use in a washing machine. The manufacturer's instructions on the packaging must be observed.

▶ Dye removers contain sulphur compounds which can cause damage such as corrosion. Do not use these products in this washing machine.

▶ Avoid contact of stainless steel surfaces with liquid cleaning and disinfecting agents which contain chlorine or sodium hypochlorite. These agents can have a corrosive effect on stainless steel. Aggressive chlorine bleach vapours can also be corrosive. Do not store open containers of these agents near the machine.

▶ Do not use a pressure washer or hose to clean the washing machine.

Chlorine and component damage

▶ Frequent use of chlorine products increases the risk of damage to components.

▶ The use of substances containing chlorine, such as sodium hypochlorite and chlorine bleach in powder form, can result in damage to the protective layer of stainless steel and corrosion on components. Therefore, refrain from using substances containing chlorine. Use oxygen-based bleaching agents instead.

If, however, chlorine bleaching agents are used, an anti-chlorine treatment must always be carried out. Otherwise, both the washing machine components and the laundry may suffer persistent and irreparable damage.

▶ Anti-chlorine treatment must be carried out immediately after chlorine bleaching agents have been used. Hydrogen peroxide as well as oxygen-based detergents and bleaching agents are suitable for anti-chlorine treatment. The suds must not be drained in between.

Treatments with thiosulphates can result in gypsum-like deposits particularly when used in combination with hard water. This gypsum can build up in the washing machine or cause incrustations on the laundry. Treatment with hydrogen peroxide is recommended over treatment with thiosulphates because hydrogen peroxide neutralises chlorine.

The exact dispensing quantities and the treatment temperatures required must be set and tested on site in accordance with the dispensing recommendations of the detergent and cleaning agent manufacturers. The laundry must also be tested to check whether it contains any active chlorine residues.

Accessories

▶ Accessory parts may only be fitted when expressly approved by Miele. If other parts are used, warranty, performance and/or product liability claims will be invalidated.

Disposing of your old machine

▶ Ensure that the door locks are unusable when disposing of or scrapping old washing machines. This will prevent the risk of children accidentally locking themselves in while playing and endangering their lives.

Miele cannot be held liable for damage caused by non-compliance with these safety notes and warnings.

Description of the machine

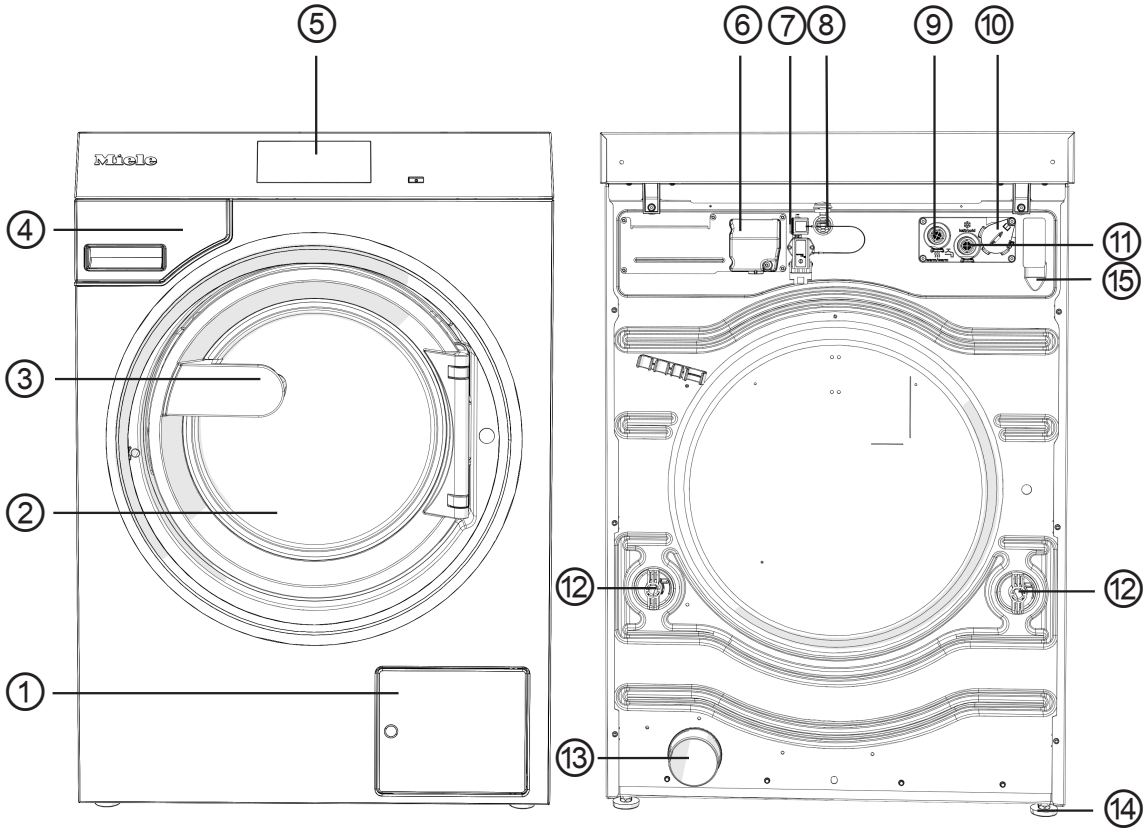

① Access to drain filter and drain pump or drain valve
② Drum door
③ Door handle
④ Detergent drawer
⑤ Display (further information can be found in the “Operation” section)
⑥ Electrical connection
⑦ Interface for Connector Box
⑧ Interface for LAN
⑨ Hot water connection
⑩ Interface for external dispensing
⑪ Cold water connection
⑫ Transit bars
⑬ Water drain (for drain valve variant)
⑭ 4 adjustable feet
⑮ Drain hose connection (for drain pump variant)

Control panel

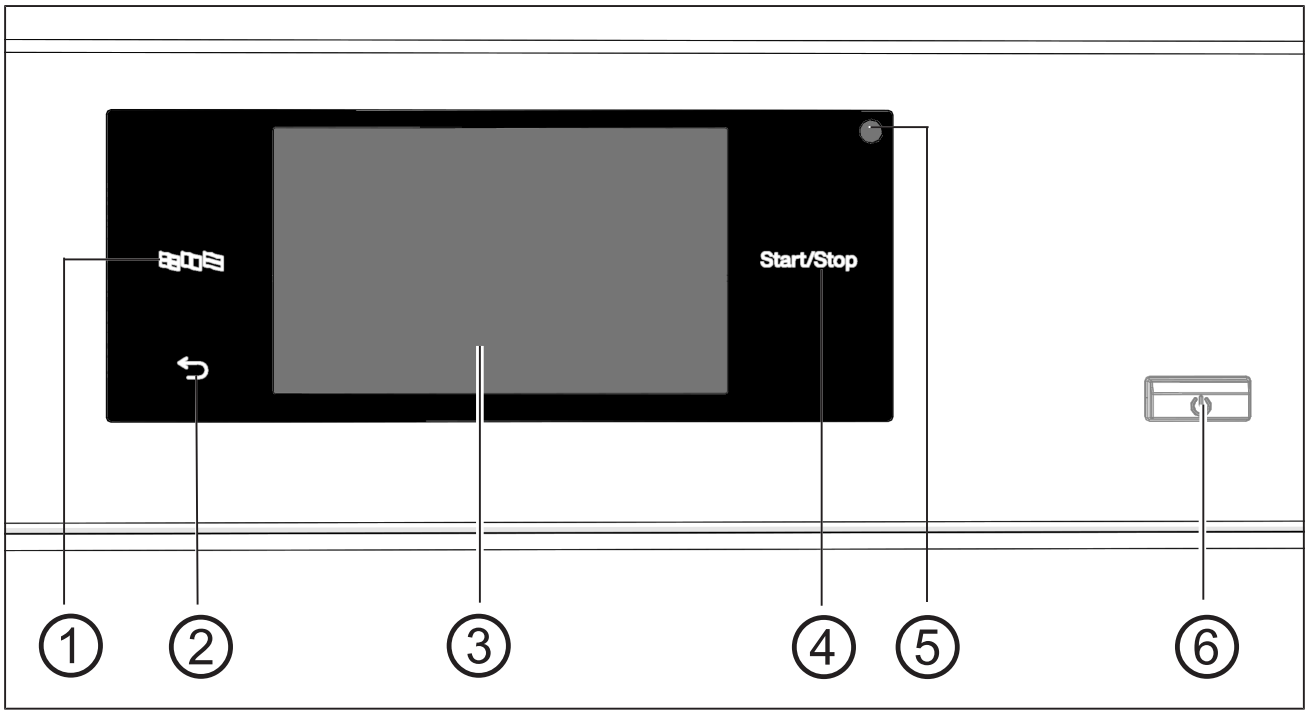

① **Language sensor control**
For selecting the current user language. The supervisor language is displayed again at the end of the programme.

② **Back sensor control**
Takes you back one level in the menu.

③ **Touch display** with system-specific symbols

④ ***Start*/*Stop* sensor control**
Starts the selected wash programme and stops a programme while it is running. The programme selected can be started as soon as the sensor control starts flashing.

⑤ **Optical interface**
For the Customer Service Department.

⑥ **button**
For switching the washing machine on and off.

Sensor controls and touch display

The sensor controls ⊞⊟⊠, ⮌ and *Start/Stop* and the elements in the display respond to finger tip contact. Every touch of a sensor control is confirmed with an audible keypad tone. You can adjust the volume of the keypad tone or switch it off (see “Supervisor level”).

The control field with sensor controls and the touch display can be scratched by pointed or sharp objects, e.g. pens.
Only touch the control field with your fingers.

Main menu

After switching on the washing machine, the main menu will appear in the display.

You can access all the important sub-menus from the main menu.

Touch the ⌂ symbol at any time to return to the main menu. Values set previously are not saved.

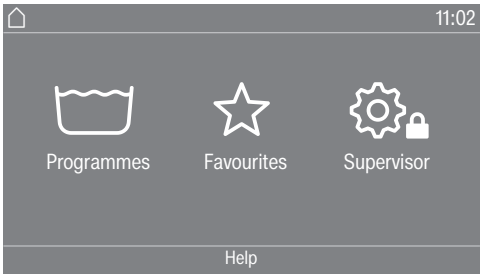

“⊔ Programmes” menu

In this menu, you can select the wash programmes.

“☆ Favourites” menu

In this menu, you can select 1 favourite programme from a total of 24 favourite programmes. The wash programmes can be set up and saved by the supervisor in the Favourites menu (see “Favourite programmes” under “Supervisor level”).

“⚙ Supervisor”

You can alter the washing machine’s electronic module to suit changing requirements in the supervisor level (see “Supervisor level”).

Examples of how to operate the machine

Selection lists

“Programmes” menu (single selection)

You can scroll right or left by swiping your finger across the screen. To do this, place your finger on the touch display and swipe it in the direction you want.

The orange scroll bar shows that there are further options to choose from.

Touch a programme name to select the wash programme.

The display will change to the standard menu for that programme.

“Extras” menu (multiple selection)

To access the level for selecting Extras, you first need to select a programme, e.g. Whites.

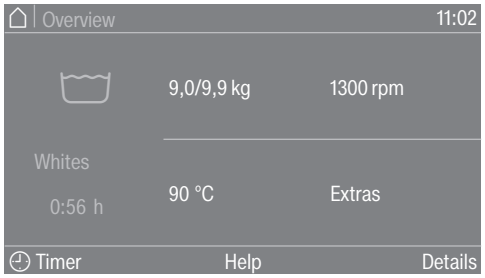

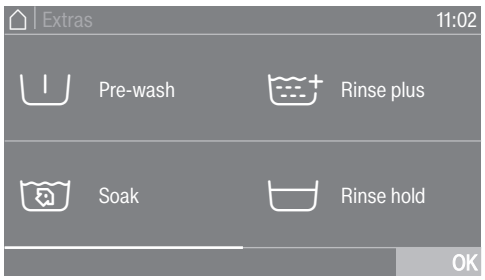

Touch one or several *Extras* to select it/them.

Currently selected *Extras* are marked orange.

To deselect an *Extra*, simply touch the *Extra* again.

Use the *OK* symbol to activate all selected *Extras*.

Setting numerical values

You can set numerical values in some menus.

The following example shows how to set the time of day. The “Supervisor level” section describes how to get to this level.

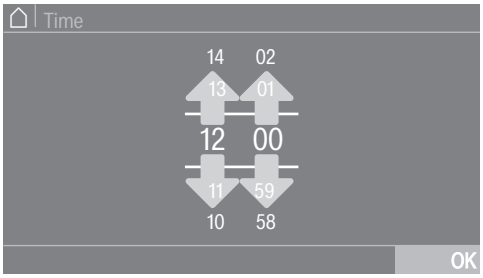

Enter the numbers by swiping up or down.

Place your finger on the number that you want to change and move your finger in the direction you want. Use the *OK* symbol to accept the set numerical value.

Tip: A numerical keypad may also appear to adjust the value for some settings.

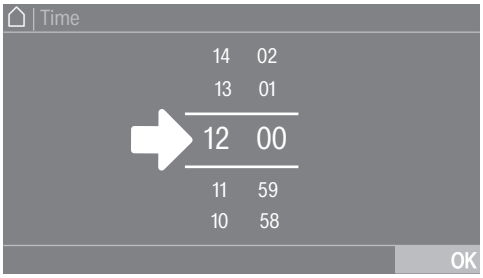

Briefly touching a number between the two lines will bring up the numerical keypad.

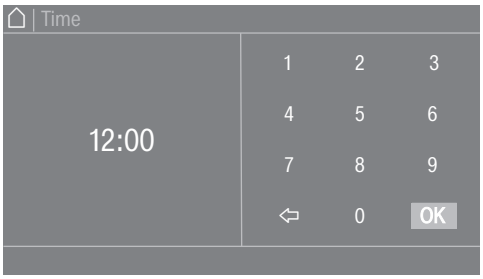

Once a valid number has been entered, the *OK* symbol will be highlighted green.

Pull-down menu

The following example describes the display for an ongoing wash programme. The “Programme start – programme end” section describes how to get to this level.

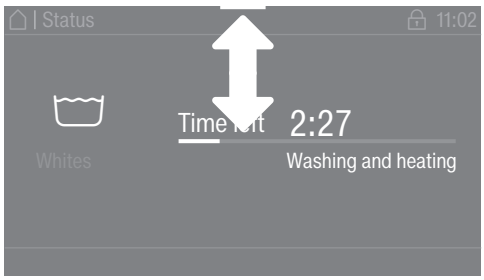

If an orange bar appears at the top of the screen in the middle of the display, you can open the pull-down menu. Touch the bar and drag it down with your finger on the display.

Exiting a menu level

- Touch the ⮌ symbol to return to the previous screen.

Entries you have made before this which have not yet been confirmed with *OK* will not be saved.

Help display

With some menus, Help appears along the bottom line of the display.

- Touch the Help selection area to display the text.
- Touch the Close selection area to return to the previous screen.

Operating a launderette machine

The main menu will vary depending on the programming status (see “Supervisor level – Controls”).

Shortcuts are the easiest way to operate the machine. Operating staff are unable to change pre-set programmes.

Launderette, basic

Between 4 and 12 pre-set programmes are available. These programmes cannot be changed by the user.

Laundrette Logo

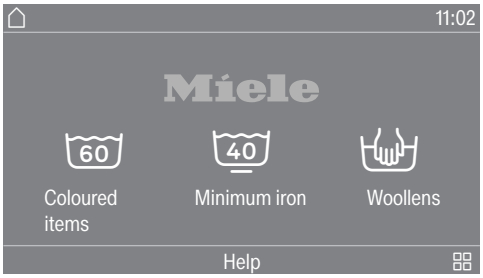

Up to 12 pre-set programmes are available. The first 3 programmes can be selected directly. The remaining programmes are selected from a list ⊞. These programmes cannot be changed by the user.

Preparing for use

Emptying pockets

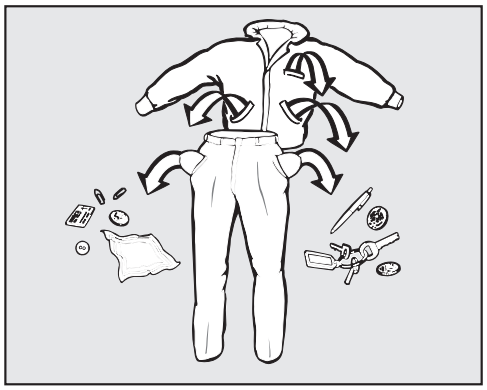

■ Empty all pockets.

⚠ Damage due to foreign objects.
Nails, coins, paper clips, etc. can cause damage to garments and components inside the machine.
Check laundry before washing and remove any foreign objects.

Sorting laundry

■ Sort the laundry according to colour and the garment care label.

Pre-treating stains

■ Badly soiled areas and stains should be cleaned as soon as possible. Stains should be carefully dabbed off using a soft, colourfast cloth.

⚠ Damage due to solvent-based cleaning agents. Cleaning agents containing benzine, stain remover, etc. can damage plastic parts. When pre-treating items, make sure that plastic parts do not come into contact with the cleaning agent.

⚠ Risk of explosion due to solvent-based cleaning agents. If solvent-based cleaning agents are used, an explosive mixture can form. Never use solvent-based cleaning agents in the washing machine.

General tips

- Do not machine wash items which are specified by the manufacturer as not washable on the care label (☐).
- Curtains: remove rollers and lead weights or place in a laundry bag.
- Sew in or remove any loose underwiring in bras.
- Turn garments inside out, if recommended by the manufacturer.
- Close any zips and velcro fasteners before washing.
- Fasten duvet covers and pillow cases to prevent small items from becoming rolled up inside them.
- Please refer to the Programme chart for more tips and tricks.

Loading and switching on the washing machine

Loading the washing machine

- Prepare the washing machine.
- Switch on the washing machine with the ⏻ button.

The welcome screen will light up.

- Open the drum door with the handle.

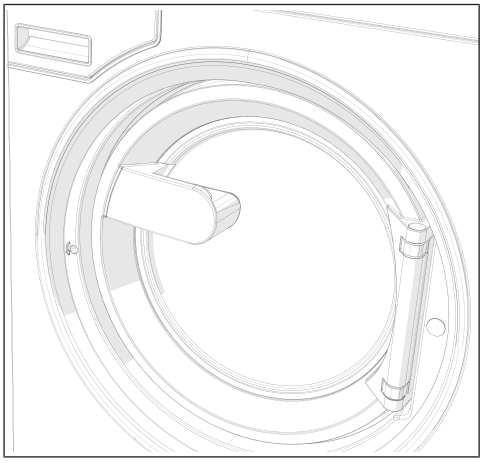

- Unfold the laundry and load loosely into the drum.

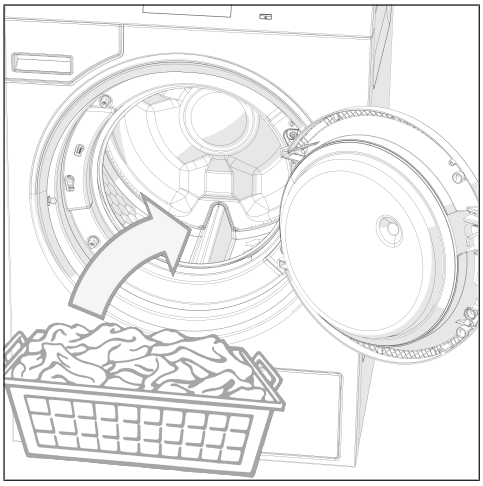

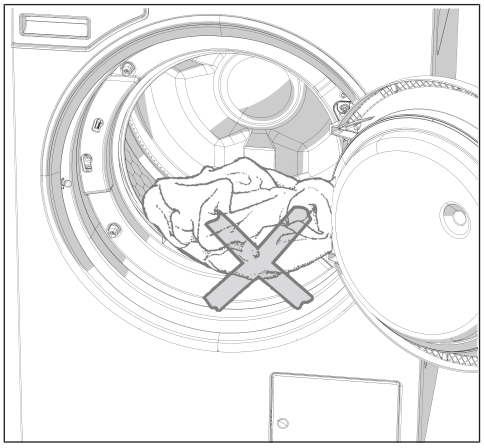

⚠ Make sure that no items are caught between the drum door and the opening.

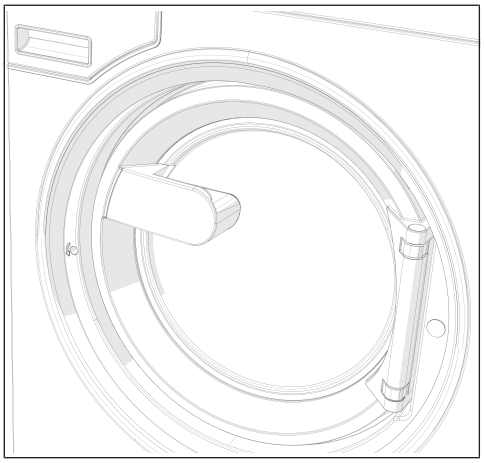

■ Close the drum door by pressing it until the pre-latch engages.

The drum door engages, but is not locked yet. The drum door locks automatically as soon as the machine starts.

Washing with detergent drawer

Adding detergent using the detergent drawer

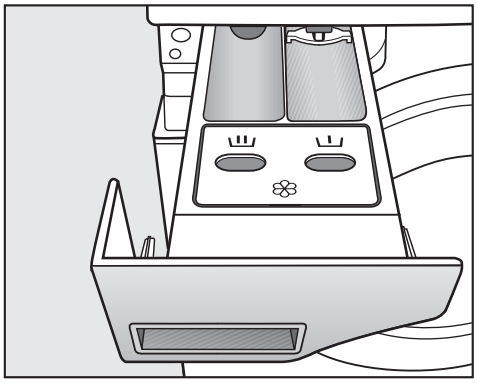

- For the standard programmes, add powder detergent to the drawer for the main wash. If desired, add detergent for a pre-wash to the drawer. Add fabric conditioner to the front of the drawer.

Adding fabric conditioner or liquid starch separately

- Select the Separate rinse programme.
- Change the spin speed if necessary.

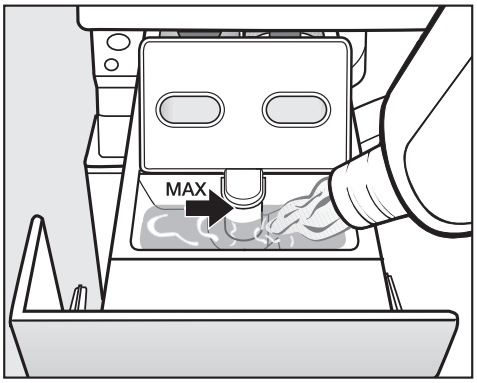

- Add fabric conditioner or liquid starch to the compartment. **Do not exceed the maximum level mark.**
- Touch the *Start*/*Stop* sensor control.

Adding starch separately

- Prepare the starch solution in accordance with the manufacturer's instructions on the packaging.
- Select the Starch programme.
- Add the prepared starch to the compartment.
- Touch the *Start*/*Stop* sensor control.

Tip: If starching separately or automatically, thoroughly clean the detergent drawer regularly.

Dyes, dye removers and descalers

Proprietary dyes, dye removers and descalers may only be used in this washing machine if the manufacturer expressly states that they are suitable for use in a washing machine. The manufacturer's instructions on the packaging must be observed.

Detergent dispensing

Detergent dispensing

Avoid dispensing more than the required amount as this can cause excessive foaming.

- Only use low foaming detergents.
- Dispense according to the detergent manufacturer's recommendations.

The dispensing amount will depend on:

- The amount of laundry
- The water hardness
- How dirty the laundry is

Detergent dispensing quantity

Please dispense according to water hardness levels and follow the detergent manufacturer's instructions.

Water hardness levels

Water hardness level	Total hardness in mmol/l	German scale °dH
I (soft)	0–1.5	0–8.4
II (medium)	1.5–2.5	8.4–14
III (hard)	above 2.5	above 14

Check with your local water supplier if you do not know the water hardness level in your area.

Selecting a programme

Programmes

There are different ways to select a programme.

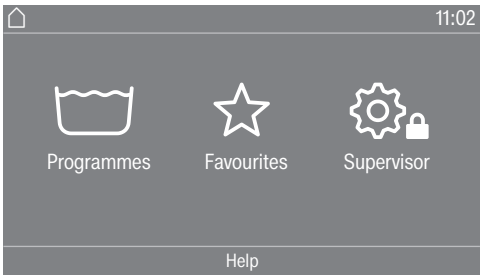

You can select a programme from the Programmes menu.

- Touch the Programmes selection area.

- Scroll to the right in the display until the programme you want appears.
- Touch the system-specific symbols on the touch display.

The display will change to the standard menu for that wash programme.

Favourites

Alternatively, you can select a programme from the Favourites menu.

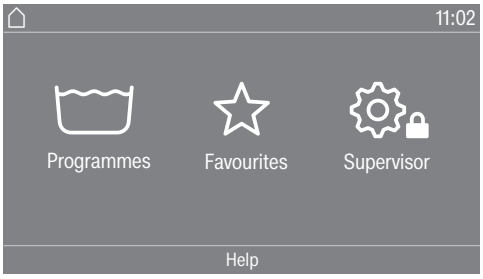

- Touch the Favourites selection area.

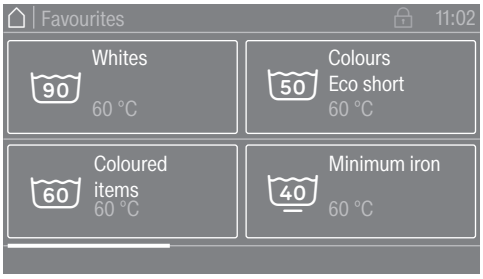

- Scroll to the right in the display until the programme you want appears.
- Touch the system-specific symbols on the touch display.

The display will change to the standard menu for that wash programme.

In the case of favourite programmes, the majority of the programme settings are already fixed and cannot be changed.

Selecting programme settings

Selecting the load size

To enable load-specific external dispensing and an adapted programme sequence, you can specify the load size for some programmes.

■ Touch the Weight (kg) selection area.

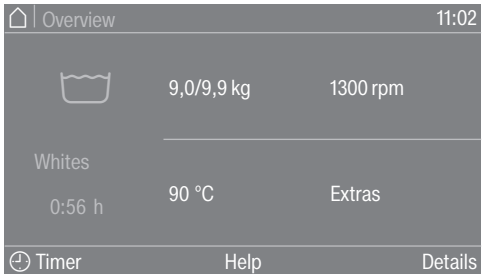

■ Enter a valid value for the load size.

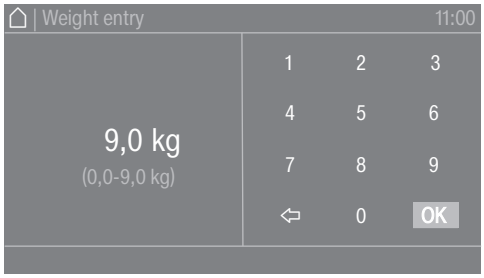

■ Press the OK symbol.

The display will change to the Overview menu.

Selecting a temperature

You can alter the pre-set temperature of a wash programme.

■ Touch the Temperature (°C) selection area.

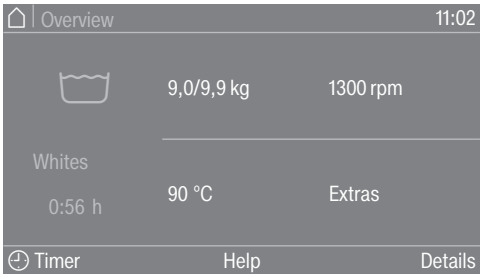

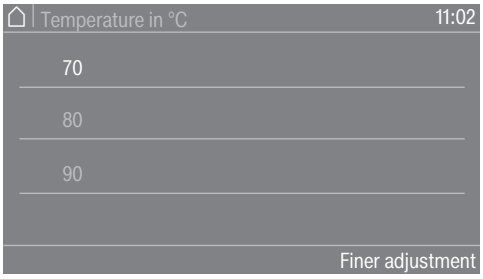

■ Select the desired temperature from the presets.

The display will change back to the Overview menu.

If you select the Finer adjustment selection area, you can set additional temperatures within the available temperature range by entering them directly.

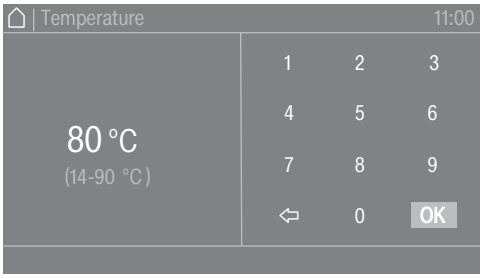

■ Select the desired value using the keypad.

■ Press the OK symbol.

The display will change back to the Overview menu.

The temperature can only be selected within the range specified below the current setting (e.g. 14–90 °C).

Selecting a spin speed

You can alter the pre-set spin speed of a wash programme.

■ Touch the Spin speed (rpm) selection area.

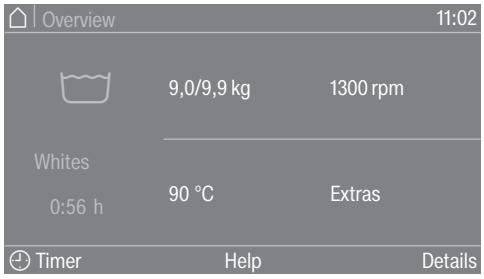

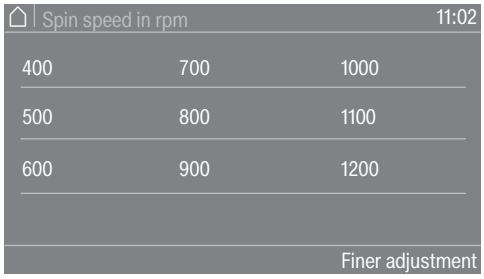

■ Select the spin speed you want from the presets.

The display will change back to the Overview menu.

If you select the Finer adjustment selection area, you can set additional speeds within the available speed range.

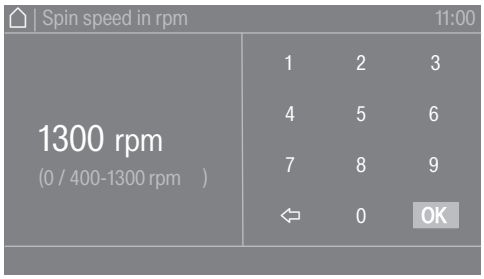

■ Select the desired value using the keypad.

■ Press the OK symbol.

The display will change back to the Overview menu.

The speed can only be selected within the range specified below the current setting (e.g. 0 / 400–1300 rpm).

Selecting Extras

Selecting Extras

You can select Extras for some wash programmes.

■ Touch the Extras selection area.

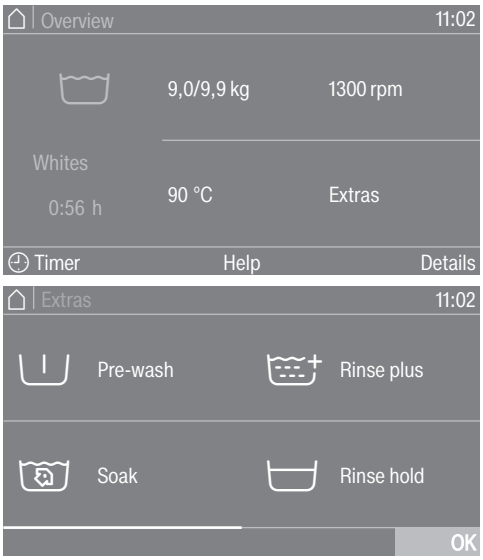

■ Select one or more Extras.

■ Press the OK symbol.

The display will change to the Overview menu.

Pre-wash

A pre-wash can be added for heavily soiled laundry. Coarse soiling is loosened and removed before the main wash.

Soak

For heavily soiled and stained items with protein stains. The soak duration is 10 minutes.

Rinse plus

An extra rinse can be activated to achieve a better wash result.

Rinse hold

The laundry is not spun after the final rinse cycle and remains in the rinse water. This helps to prevent creasing if the laundry is not going to be removed from the washing machine immediately after the end of the programme.

Filling stop

Water is drained out of the machine before the final rinse and the programme stops. The required starch, dye, proofing agent, etc. is added directly to the drum. The programme is continued with the *Start/Stop* sensor control.

Intensive

For hard-wearing laundry that is very heavily soiled. Extending the main wash increases cleaning efficiency.

Water plus

The water level in the wash cycle will be increased.

Programme start – programme end

Starting a programme

The programme can be started as soon as the *Start*/*Stop* sensor control is flashing on and off.

- Touch the *Start*/*Stop* sensor control.

The door will lock (🔒 symbol) and the wash programme will start.

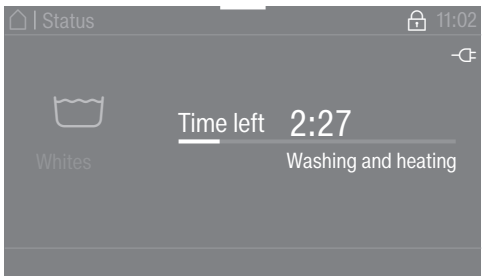

Tip: You can use the pull-down menu to display the selected temperature, spin speed and any selected Extras.

If a delay start period (🕒 Timer) has been selected, this will appear in the display at the bottom left.

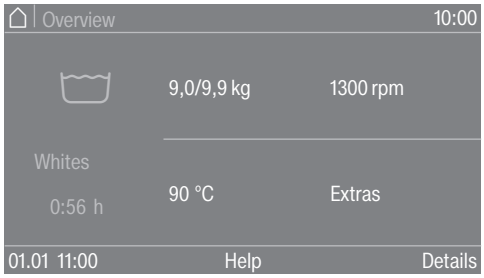

Once the delay start period has elapsed (if applied), the programme running time will appear in the display; otherwise, the running time will appear straight away. The programme sequence is also shown in the display.

Depending on the setting selected in the supervisor level or in the programme, the machine will switch to the anti-crease action cycle at the end of the programme. The door remains locked. The door can be unlocked at any time by touching the *Start*/*Stop* sensor control.

Removing the laundry

- Pull open the door.
- Remove the laundry.

> Items left in the drum could discolour other items in the next wash or become discoloured themselves.
> Remove all items from the drum.

- Check the door sealing ring for any foreign objects.
- Switch the washing machine off with the ⏻ button.

Tip: Leave the detergent drawer slightly open to allow it to dry.

Timer

The timer can be used to select a programme start date, programme start time or programme end time. This mode is also referred to as delay start.

Setting the timer

- Touch the Timer selection area.

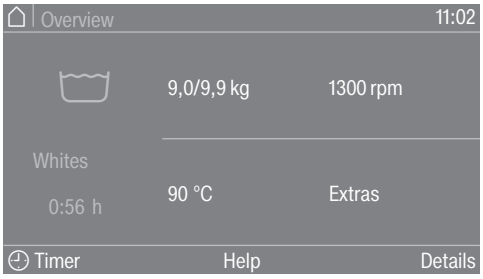

- Select option Finish at, Start date or Start at.

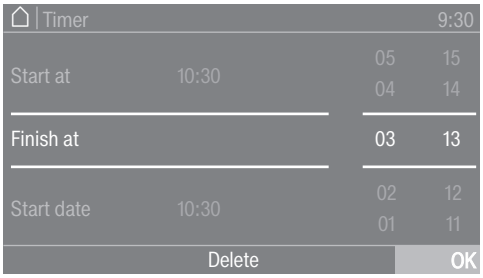

- Set the hours and the minutes or the date and confirm with the OK symbol.

Deleting the timer

The selected delay start period can be cancelled before the programme starts.

- Touch the selection area with the selected settings in the timer field, e.g. 01.01. 11:00.

The selected delay start period will appear in the display.

- Touch the Delete selection area.
- Confirm with the OK symbol.

The selected delay start period is deleted.

Starting the timer

- Touch the *Start/Stop* sensor control.

The door will lock and the time until the programme starts will appear in the display.

After the programme has started, the selected delay start period can only be changed or cancelled by interrupting the programme.

The programme can be started immediately at any time.

- Touch the Start immediately selection area.

Spinning

Final spin speed

When a programme is selected, the maximum spin speed for this wash programme is shown in the display in the pre-start menu.

You can reduce the final spin speed.

Depending on the programme, it may also be possible to increase the speed. The setting options are displayed when you tap the spin speed.

Rinse-spin

There is a spin cycle after the main wash and between the rinse cycles. A reduction in the final spin speed will also reduce the interim spin speed as appropriate.

Anti-crease

At the end of the programme, the drum continues to turn at intervals for up to 30 minutes to help prevent creasing.
The machine cannot be opened until the programme has ended.

Anti-crease is programme-dependent and the option can be switched on or off in the supervisor level.

Changing a programme

Altering the wash programme

You will need to cancel the current programme before you can select a new one.

Cancelling a programme

You can cancel a wash programme at any time after it has started.

The payment programmes or the disinfection programmes can only be cancelled by entering a code.

■ Touch the *Start/Stop* sensor control.

The following appears in the display:

ℹ Programme stopped. Continue with "Start/Stop"

The following appears in the display:

■ Select Finish.

The suds are not drained so they can be used again in a subsequent programme. Once the programme has ended, the programme end screen is displayed. It is possible to switch to the main menu while the suds are in the drum or to drain the suds by pressing the Start draining control.

The drum door remains locked while there is water in the machine.

The door can be opened under the condition Programme end without water.

■ Wait until the door unlocks.

■ Pull open the door.

■ Remove the laundry.

Switching on the washing machine after an interruption to the power supply

If the washing machine is switched off with the ⏻ button during a wash programme, the programme will be interrupted.

■ Switch the washing machine back on with the ⏻ button.

■ Note the message in the display.

■ Touch the *Start/Stop* sensor control.

The programme continues.

Adding or removing laundry

You can add or remove laundry items during the first few minutes after the programme has started.

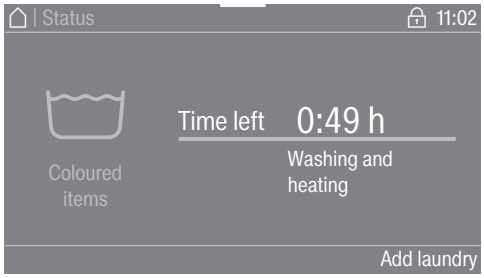

- Touch the Add laundry selection area.

If the message Add laundry is not visible in the display then it is no longer possible to add items of laundry.

The wash programme will stop and the door will unlock.

⚠ Risk of chemical burns from detergent.
When adding or removing laundry, your skin may come into contact with detergent, particularly if the detergent is dispensed externally.
Take care when placing your hands inside the drum.
If suds have come into contact with the skin, rinse off immediately with plenty of lukewarm water.

- Pull open the door.
- Add laundry or remove individual items.
- Close the door.
- Touch the *Start*/*Stop* sensor control.

The wash programme will continue.

The door lock will remain activated if the temperature in the drum is above 50 °C. The door lock will not deactivate until the temperature has dropped to below 50 °C.

Troubleshooting

Opening the door in an emergency in the event of a power failure

The drum door cannot be opened.

⚠ Warning! Danger from rotating drum and danger of scalding.
Before inserting the Torx wrench, make sure that the machine is disconnected from the electricity supply, the drum has stopped and there is no water in the machine.

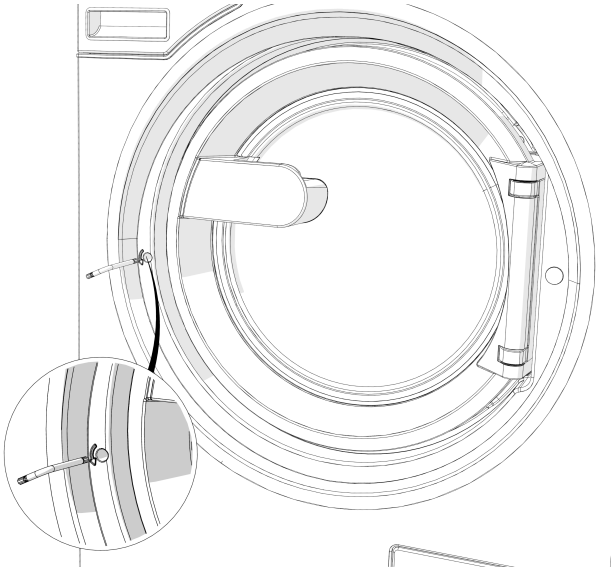

- Using a T 40 Torx wrench, turn the release element with the inner hexagon two whole revolutions **anti-clockwise (left)**.

Tip: Pushing on the door at the same time makes it easier to turn the emergency release element.

The release element is located opposite the door catch at the same height as the handle (see illustration).

The emergency release must not be turned to the right.
Danger of damage to the door lock.

The turn resistance will noticeably reduce. When the emergency release element moves freely, the door is unlocked.

Tip: It is not necessary to screw the emergency release element back in.

The door can now be opened.

Customer Service Department

In the event of a malfunction, contact the Miele Customer Service Department.

When contacting the Customer Service Department, please quote the model, serial number (SN) and material number (mat. no.) of your machine. This information can be found on the data plate. The data plate is visible in the door ring when the drum door is open, or on the back of the machine at the top:

Model			
SN:	/ 00000000		
Art.-Nr.		Mat -Nr.	
IBN			

Symbol icon

Please also pass on the fault message appearing in the machine display to the Customer Service Department.

Use only original Miele spare parts. The Miele Customer Service Department will also require the model, serial number (SN) and material number (mat. no.) when ordering.

Problem solving guide

The majority of faults and problems that arise during day-to-day use can be remedied without external assistance. You can save time and money in many cases, as you do not need to call the Miele Customer Service Department.

The following tables are designed to help you to find the cause of a malfunction or a fault and to resolve it. You should, however, note the following:

⚠ Repair work to electrical appliances should only be carried out by an authorised technician. Repairs by unqualified persons can cause considerable danger to users.

The wash programme does not start

Problem	Cause and remedy
The display remains dark, and the *Start/Stop* sensor control does not light up or flash.	There is no power to the washing machine. ■ Check whether the washing machine is switched on. ■ Check whether the washing machine is connected to the power supply. ■ Check whether the fuse has tripped.
	The washing machine has switched off automatically to save energy. ■ Switch the washing machine back on with the ⏻ button.
The following appears in the display: F -Door lock fault. You can continue by pressing the "Start/Stop" button	The door is not locked properly. The door lock could not engage. ■ Close the door again. ■ Start the programme again. If the fault message appears again, contact the Customer Service Department.

Problem	Cause and remedy
The display is dark and the *Start*/*Stop* sensor control is flashing slowly.	The display has switched off automatically to save energy. ■ Touch any of the controls. The display switches back on.
The programme is on the pre-start screen and the *Start*/*Stop* sensor control is not flashing.	The drum door has been pushed to but is not closed correctly. ■ Check whether the drum door is closed correctly.

Programme cancellation and fault message

Problem	Cause and remedy
F - Water drainage fault. If restart fails, call Service.	The drain is blocked or restricted. The drain hose has been fixed too high. ■ Clean the drain filter and the drain pump. ■ The maximum delivery head is 1 m.
F - Water intake fault. If restart fails, call Service.	The water inlet is blocked or restricted. ■ Check whether the stopcock has been properly opened. ■ Check whether the water inlet hose is kinked.
	The water pressure is too low. ■ Switch on the Low water pressure setting (see “Low water pressure” under “Supervisor level”).
	The water inlet filters are blocked. ■ Clean the filters (see “Cleaning the water inlet filters” under “Cleaning and care”).
⚠ Disinfection temperature not reached	The required temperature was not reached during the disinfection programme. ■ The washing machine has not carried out the disinfection cycle correctly. ■ Start the programme again.
⚠ Fault F. If restart fails, call Service	There is a fault. ■ Disconnect the washing machine from the electricity supply. ■ Wait at least 2 minutes before reconnecting the washing machine to the electricity supply. ■ Switch the washing machine on again. ■ Start the programme again. If the fault message appears again, contact the Customer Service Department.

A fault message appears in the display

Problem	Cause and remedy
ℹ Container empty	One of the external detergent containers is empty. ■ Refill the detergent container.
ℹ Hygiene info: run a programme of at least 60°C	During the last wash, a wash programme with a temperature below 60 °C or the *Drain/Spin* programme was selected. ■ Start a programme with a minimum temperature of 60 °C or the Clean machine programme.
ℹ F - Water intake fault. If restart fails, call Service.	The hot water supply is blocked or restricted. ■ Check whether the hot water stopcock has been properly opened. ■ Check whether the water inlet hose is kinked.
ℹ Laundry not properly spun	The selected spin speed was not reached during the final spin due to excessive imbalance. ■ Check that the washing machine is level. ■ Start the spin cycle again.
ℹ Machine is leaking	The washing machine or drain valve is leaking. ■ Close the stopcock. ■ Contact the Miele Customer Service Department.

Insufficient wash results

Problem	Cause and remedy
Liquid detergent does not give the required result.	Liquid detergents usually contain no bleaching agents. They do not remove fruit, coffee or tea stains. ■ Use a general purpose powder detergent containing a bleaching agent. ■ Pour stain remover powder into drawer ⊔ in the dispenser compartment and liquid detergent into a dispenser ball. ■ Never put stain remover powder and liquid detergent together in the detergent drawer.
White residues which look like powder detergent are seen on dark textiles after washing.	The detergent contained compounds (zeolites) to aid water softening which are not soluble in water. These have ended up on the laundry. ■ Try to brush off the residues with a soft brush once the laundry is dry. ■ In future, wash dark textiles using a detergent which contains no zeolites. Liquid detergents usually contain no zeolites.
Textiles with particularly greasy soiling are not properly clean.	■ Select a programme with pre-wash. Use liquid detergent for the pre-wash. ■ Continue to use universal powder detergent for the main wash.
	The use of heavy-duty detergent is recommended in the main wash for very heavily soiled workwear. Please seek advice from the detergent manufacturer.
Grey, greasy particles cling to washed laundry.	Insufficient amounts of detergent were used. The laundry was heavily soiled with grease (oils, ointments). ■ Use more detergent or use liquid detergent with this type of soiled laundry. ■ Before washing the next load run a 60 °C programme with liquid detergent but without a load.

General problems with the washing machine

Problem	Cause and remedy
The washing machine vibrates during the spin cycle.	The machine feet are not level and not secured. ■ Level the washing machine and secure the feet.
Strange pump noises can be heard.	Not a fault. These slurping noises occur at the start and end of a pump sequence as a normal part of the operation.
Large amounts of detergent residue remain in the detergent drawer.	The water flow pressure is too low. ■ Clean the water inlet filters.
	When powder detergent is used in conjunction with water softeners it tends to become sticky. ■ Clean the detergent drawer and in future, add detergent first and then the water softener into the compartment.
Fabric conditioner is not completely dispensed or too much water remains in the ❀ compartment.	The siphon is not correctly positioned or is clogged. ■ Clean the siphon (see “Cleaning and care – Cleaning the detergent drawer”).
The display is in a different language.	A different language has been selected. ■ Switch the washing machine off and on again. The selected supervisor language appears in the display.
	The supervisor language has been changed. ■ Select the language you require (see “Language” under “Supervisor level”).
The laundry has not been spun properly. The laundry is still wet.	The machine detected a high level of imbalance during the final spin and reduced the spin speed automatically. ■ Include both large and small items in the load as this will achieve better distribution.
The drum remains stationary but the programme keeps running.	Fault in the programme sequence ■ Switch the washing machine off and then back on with the ⏻ button. ■ Note the message in the display. ■ Touch the *Start/Stop* sensor control. The drum continues to spin and the programme continues.

The door will not open

Problem	Cause and remedy
The door cannot be opened.	The door is locked during the wash process. ■ Touch the *Start/Stop* sensor control. ■ Select Programme cancellation or Add laundry. The door will unlock and you will be able to pull it open.
	There is still water in the drum and the washing machine is unable to drain. ■ Clean the drainage system as described under “Opening the door in the event of a blocked drain outlet and/or power cut”.
At the end of a programme or when a programme is cancelled, the following appears in the display: Cool down **or** Comfort cooling**.**	To protect the user against scalding, the door cannot be opened if the suds temperature is higher than 55 °C. ■ Wait until the temperature in the drum has decreased and the message has gone out in the display.
The following appears in the display: F -Door lock fault. Call Service.	The door lock has jammed. ■ Contact the Miele Customer Service Department.

Opening the door in the event of a blocked drain outlet and/or power cut

⚠ Disconnect the machine from the mains electricity supply.

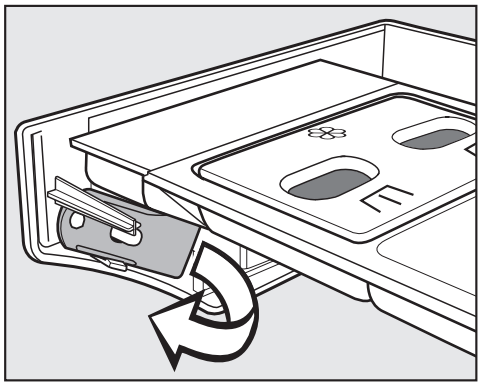

■ There is a lever behind the detergent drawer panel which opens the access panel to the drainage system.
The lever is provided in the companion pack/as an accessory for models with a locked detergent drawer.
Remove the lever.

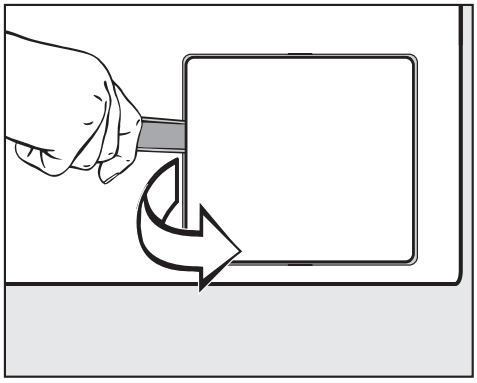

■ Open the access panel to the drainage system.

If the drain outlet is clogged, a large amount of water may be retained in the washing machine.

⚠ If laundry has been washed at a high temperature, water draining out of the machine will still be hot.

■ Place a suitable container under the access panel.

Do not unscrew the drain filter completely.

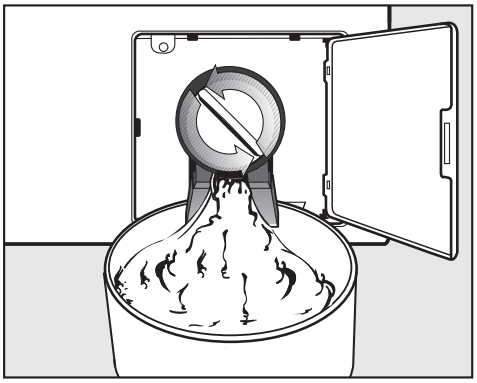

■ Unscrew the drain filter to let the water out.

■ Tighten the drain filter back up again if you need to interrupt the flow of water.

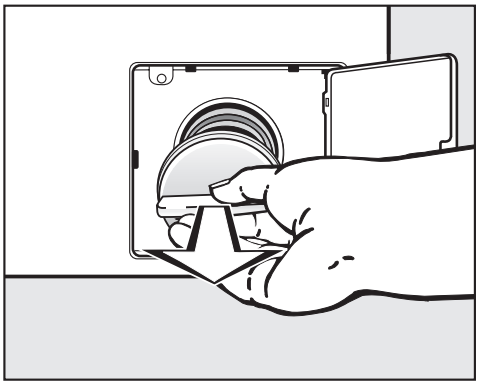

■ If no water flows out, unscrew the drain filter completely.

■ Clean the drain filter thoroughly.

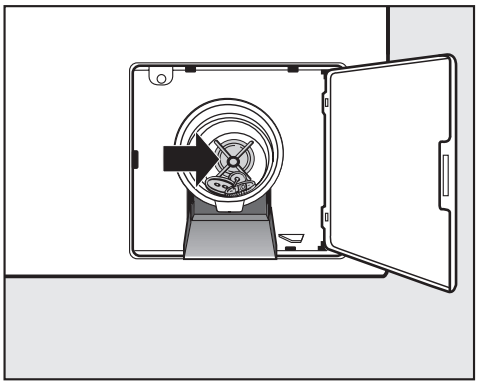

- Remove any foreign objects (e.g. buttons, coins, etc.) and clean the interior. Turn the impellers by hand to check that they rotate freely.
- Put the drain filter back in place and secure it.

⚠ Make sure the drain filter is reinserted and securely tightened. Otherwise there is a risk of water leakage during use.

Machines with drain valve

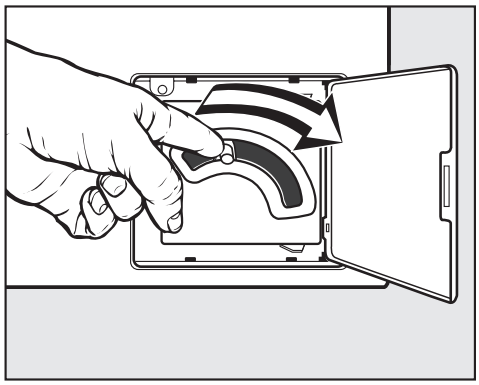

- If the machine has a drain valve, push the emergency drain lever downwards and hold until no more water runs out.

- Carry out cleaning and maintenance of the washing machine after use if possible.

Do not use a pressure washer or hose to clean the machine.

- Clean the **machine casing, control panel and plastic parts** with a mild, non-abrasive cleaning agent or with a soft, damp cloth only. Wipe dry with a soft cloth.

Scouring agents will scratch the surface.

- Clean stainless steel parts of the casing with a commercially available stainless steel cleaner.
- Remove any deposits from the door seal with a damp cloth.

Penetration of cleaning agents into electrical components.

- When disinfecting the surfaces, use a moist cloth only to clean the front and around the door lock. Do not spray any liquids.

Build-up of rust

The drum is manufactured from rust-free stainless steel. Water or foreign objects containing ferrous substances (e.g. paper clips, metal buttons or metal swarf) which are placed in the machine with the laundry can cause a build-up of rust in the drum. Clean the drum regularly in this case and if rust occurs, remove it immediately with a proprietary stainless steel care product. Check the door seals for ferrous residues and clean thoroughly as described above. This must be carried out regularly.

Cleaning the detergent drawer, detergent compartments and siphons

- Clean the detergent drawer and the detergent compartments thoroughly with hot water as required to remove detergent residues and incrustations.
- If the machine is not going to be used for a long time, leave the flap of the detergent drawer open.

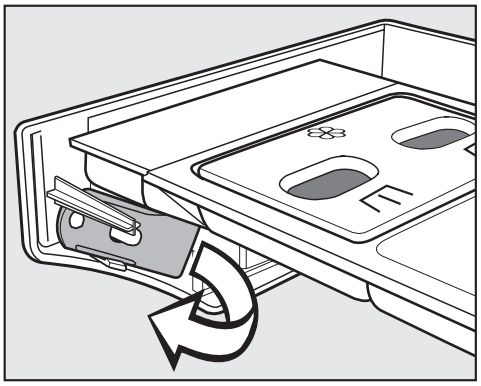

- There is a yellow lever behind the detergent drawer panel.
- Remove the lever.

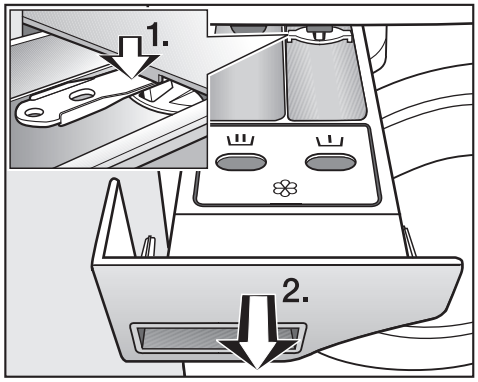

- Pull out the detergent drawer until a resistance is felt.

1. Use the lever to push down and release the lock.
2. Remove the detergent drawer.

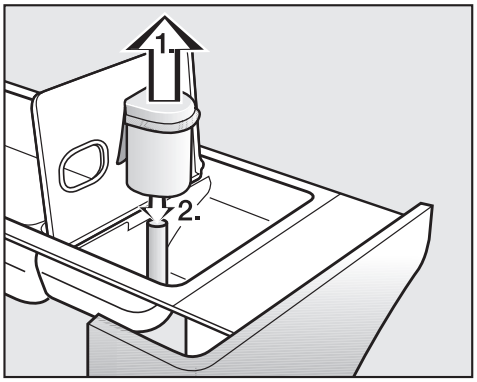

- Clean the siphon.

1. Remove the siphon from the ❀ compartment and rinse under warm running water. Clean the siphon tube in the same way.

2. Refit the siphon.

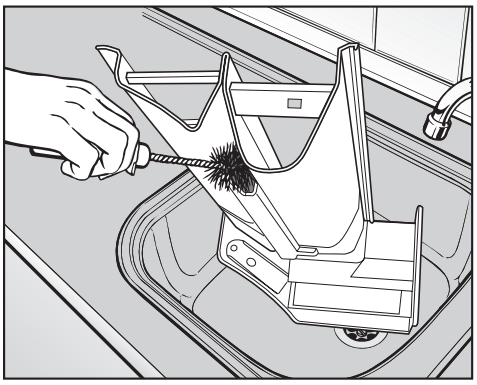

■ Clean the fabric conditioner channel using a brush and warm water.

Clean the siphon and fabric conditioner channel particularly thoroughly after using liquid starch a few times. Liquid starch results in clogging.

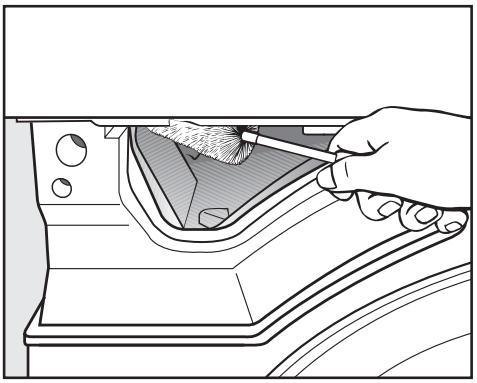

■ Use a bottle brush to remove detergent residues and limescale from the jets inside the detergent drawer.

Cleaning the water inlet filters

The washing machine has filters to protect the water intake valves. You should inspect the filters approximately every 6 months. Perform this check more often if there are frequent interruptions to the external water supply.

Cleaning the filters in the inlet hoses

■ First turn off the stopcock.

■ Unscrew the water inlet hose from the stopcock.

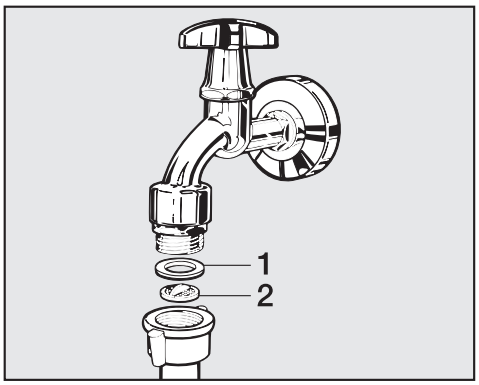

- Remove the rubber seal (1) from the recess.
- Using pointed pliers, take hold of the plastic filter bar (2) and remove it.
- Clean the plastic filter.
- Reassemble in reverse order.

Turn on the stopcock and check the connection is watertight. If water drips out, tighten the connection.

Cleaning the filters in the water intake valves

- Using pliers, carefully loosen the ribbed plastic nut on the intake valve and unscrew.

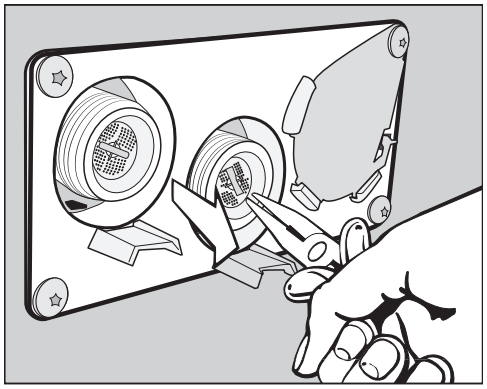

- Use pointed pliers to withdraw the filter by the bar and clean it. Reassemble in reverse order.

The filters must be reinserted after cleaning.

Installing the washing machine

The washing machine must be installed by Miele Customer Service Department or by an authorised dealer. Please observe the information on the installation plan.

This washing machine is only intended for items of laundry that have not been proofed with dangerous or inflammable substances.

- To avoid the risk of frost damage, the machine must not be located in rooms which may be subject to very low temperatures.
- Transport the machine on a pallet truck inside the room.

Machines with feet must not be pushed to move them.
This could damage them.

- Remove the packaging carefully with a suitable tool.
- Lift the machine off the pallet using a lifting device.

Securing the machine

- The feet of the washing machine must be secured to the floor using the fixtures and fastenings supplied.

The fastenings included are for bolting the machine to a concrete floor. For other types of flooring, please purchase suitable fastening materials separately.

Installing the machine on ships

On other types of floor structures (in cases where the machine is being installed on sea-going vessels, for example), the fixing materials must be provided on site.

For installation on sea-going vessels, the machine must be secured to prevent slipping and tipping by fastening it to the floor of the vessel (e.g. using clamps that are welded to the floor of the vessel).

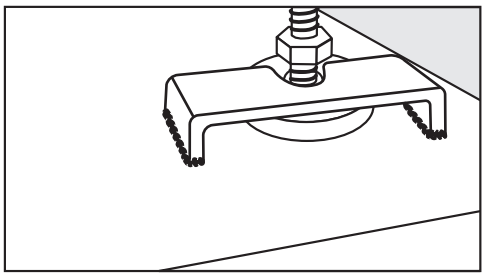

- All 4 of the machine's feet must be secured.

General operating conditions

This washing machine is intended only for use in a commercial environment and must only be operated indoors.

Ambient temperature in installation room: 0 °C to 40 °C

Relative humidity: non-condensing

Depending on the nature of the installation site, sound emissions and vibrations may occur.

Tip: Have the installation site inspected and seek the advice of a specialist in instances where increased noise may cause a nuisance.

For easy maintenance

For ease of future maintenance and servicing, the minimum dimensions and distance to the wall must be observed to enable access.

- The minimum dimensions and distance to the wall must be observed.

Minimum safety distance to the wall approx. 400 mm to allow for maintenance.

Minimum safety distance to the side 50 mm (wall or other machines).

- Adjust the washing machine's adjustable feet until the machine is level.

The washing machine must be completely level to ensure smooth operation.

PWM 509

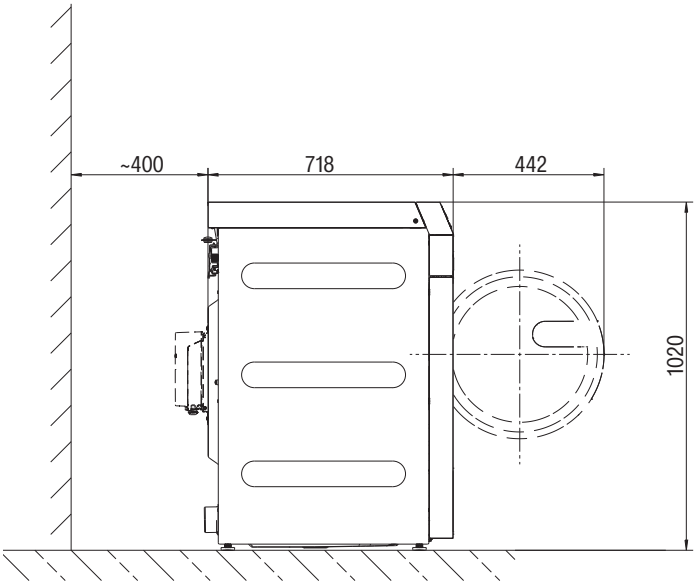

PWM 511

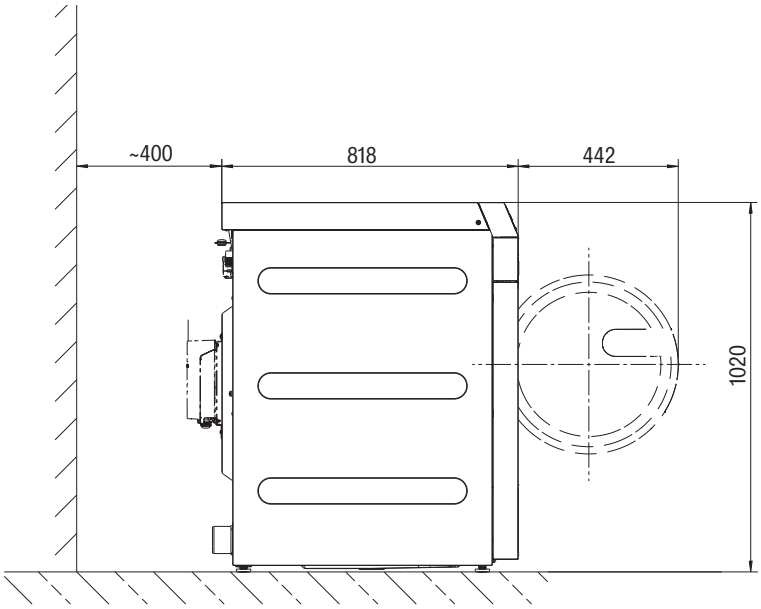

Installing the washing machine

- Transport the washing machine to the installation site.

⚠ Ensure that it is stable during transportation.

⚠ Do not pick it up by the drum door.

⚠ The washing machine must not be installed under a counter.

Installation on a plinth

The machine may be installed on a steel plinth with an open or closed base or on a concrete plinth.

⚠
There is a risk of the machine moving and falling off the plinth during spinning.
If the machine is installed on a plinth already present on site, it must be secured using tensioning strips.

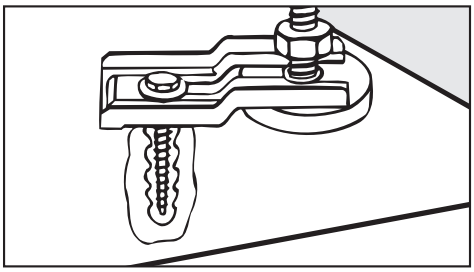

- Secure the front feet of the machine with the tensioning strips supplied.
- Follow the installation instructions supplied.

Transit bars

Removing the transit bars

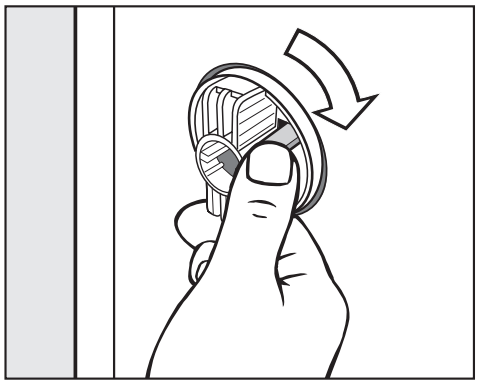

■ Release the catch and turn the left-hand transit bar 90° clockwise.

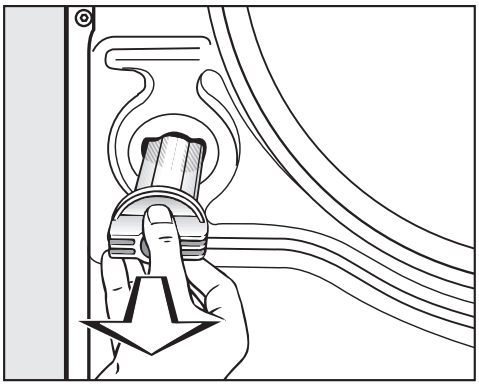

■ Pull out the transit bar.

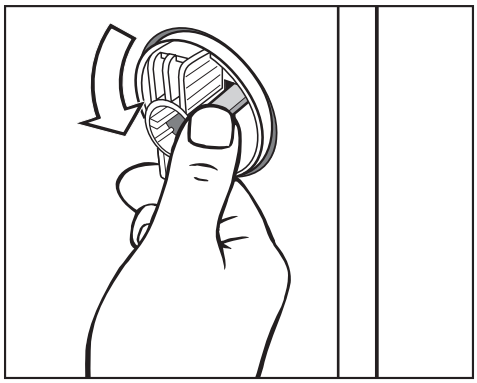

■ Release the catch and turn the right-hand transit bar 90° anti-clockwise.

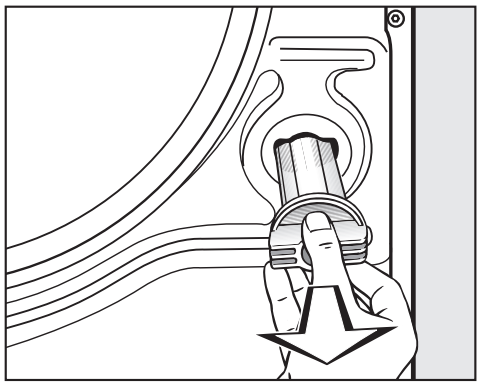

■ Pull out the transit bar.

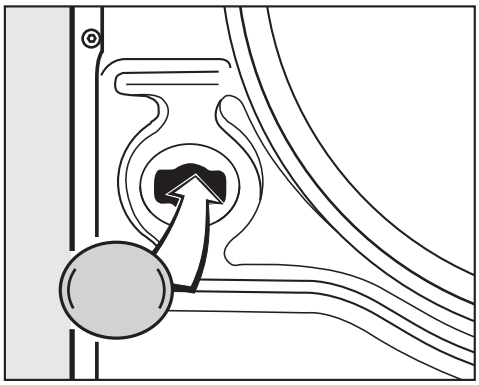

■ Fit the supplied stoppers onto the two holes.

Retain the transit bars. They need to be refitted should the machine ever need to be moved again.

Refitting the transit bars

■ Refitting is carried out by reversing the procedure.

Levelling the machine

Ensure that the machine feet and the installation surface are dry to prevent the machine from slipping during the spin cycle.

Incorrect installation may increase water and energy consumption and may cause the machine to move about.

The four adjustable feet are used to level the washing machine. The machine is supplied with all feet screwed in.

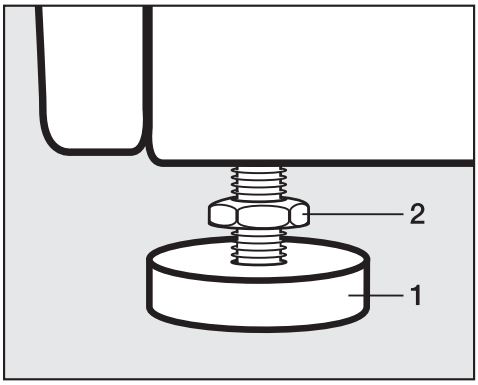

- Using the open spanner supplied, turn the counter nut (2) in a clockwise direction. Then turn the counter nut (2) together with the foot (1) to unscrew.

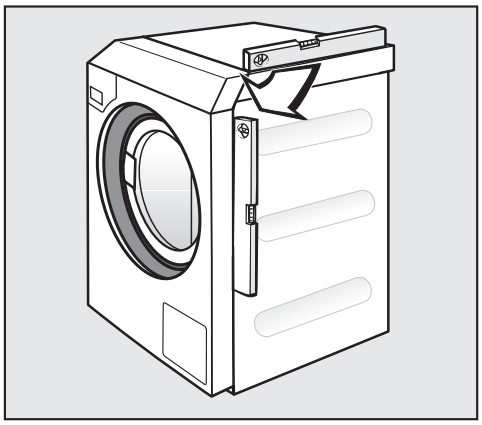

- Use a spirit level to check the machine is standing level.
- Hold the foot (1) securely with a pipe wrench. Turn the counter nut (2) again using the open spanner supplied until it sits firmly up against the casing.

The counter nuts must sit firmly up against the casing. Please also check this for the feet which did not need adjustment. Otherwise there is a risk of the washing machine moving about.

Water connection

According to national regulations for drinking water quality, with effect from 21 March 2021, a non-return valve to prevent backsiphoning must be fitted between the stopcock and the water inlet hose during commissioning on all appliances in Germany. The non-return valve prevents water from the water inlet hose from flowing back into the on-site drinking water supply. The non-return valves are supplied as accessories.

The flow pressure must be a minimum of 100 kPa and must not exceed 1000 kPa. If the flow pressure is higher than 1000 kPa, a pressure reducing valve must be used.

The machine must be connected to the water supply using the inlet hoses included in the scope of supply.

⚠ The connection points are subject to water supply pressure. Turn on the stopcocks slowly and check for leaks. Correct the position of the seal and screw thread if appropriate.

Cold water connection

For the cold water connection one stopcock each with a ¾" screw thread is required.

If a water connection is not available, only a qualified installer may connect the washing machine to the mains water supply.

The water inlet hose for cold water is not suitable for connection to a hot water supply.

In the event that hot water is not available on site, a cold water supply must be used for the hot water connection.

The required amount of hot water should be added to the cold water volume.

Alternatively, the hot water connection should be blocked using the blind stopper supplied with the machine and the machine controls should be set to cold water intake by the service technician.

Using the machine in cold water mode

For cold water mode, a cold water connection must be established at the cold and hot water valve.

Alternatively, the hot water valve can be deactivated by the technician. The following steps must be performed.

The service technician must deactivate the hot water valve.

- Unscrew the hot water hose.
- Screw on a stopper.

Hot water connection

The same connection requirements as for cold water also apply to hot water up to 70 °C.

A suitable connection hose with a threaded union is supplied with the machine.

The machine with hot water connection also requires a cold water connection.

Using the machine in hot water mode

For hot water mode, connect the hot water and cold water connections to the relevant valves. Both connections are required.

Drain valve (depending on model)

In the case of washing machines with a drain valve, a motorised valve is used to drain the machine. An HT DN 70 angle connector can be used for draining the machine directly into the waste water system (without a siphon) or into an on-site floor drain (with odour trap).

Thanks to an improved closing mechanism and a larger cross-section, even the coarsest of soiling does not leave any deposits or debris behind which could result in blockages. The drain valve can also be operated manually to allow the suds container to be emptied in the event of a power outage.

A vented drainage system is vital for unimpeded drainage.
If several machines are connected to a single drain pipe, this should be sufficiently large to allow all machines to drain simultaneously.
The appropriate Miele installation kit (mat. no.: 05 238 090) is available to order from the Miele Customer Service Department or your Miele dealer for venting an HT DN 70 pipe.
If the slope for drainage is extremely steep, the piping must be vented to prevent formation of a vacuum in the washing machine's drainage system.

Slow or obstructed drainage or a backup of water in the washing machine drum as a result of undersized pipework can result in faults occurring during programmes, which will result in fault messages appearing in the display.

⚠ Outflowing suds can be as hot as 95 °C. Danger of burning!
Avoid direct contact.

Drain pump (depending on model)

In machines with drain pump, the suds are drained through a drain pump with a delivery head of max. 1 m.

The drain hose must be installed free of kinks for the suds to drain freely.

There are the following options for draining the machine:

- Drain hose connected to a plastic drain pipe with a rubber sleeve (there is no need to use a siphon)
- Drain hose connected securely to a sink with a plastic nipple
- Connected securely to a floor drain (gully)

If required, the hose can be extended to a length of up to 5 m. The corresponding accessories are available from the Miele Customer Service Department or your Miele dealer.

For a drain height of more than 1 m, a replacement drain pump for a delivery head of max. 1.8 m is available from the Miele Customer Service Department or from your Miele dealer.

Electrical connection

The electrical connection must only be carried out by a suitably qualified electrician in accordance with local and national regulations such as BS 7671 in the UK.

It is recommended to connect the product to the electrical supply with a suitably rated plug and socket.

A **residual current device (RCD) type B** (sensitive to universal current) must be used if one is being installed.

The electrical components of the machine comply with EN 60335-1, EN 50571.

The voltage is stated on the data plate.

For hard-wired machines, an all-pole means of deactivation must be provided on site. Switches with a minimum contact gap greater than 3 mm are suitable disconnectors. These include circuit breakers, fuses and contactors (VDE 0660).

The plug connector or isolator switch should be easily accessible at all times.

If the machine is disconnected from the power supply, the disconnector must be lockable or the point of disconnection must be monitored at all times.

⚠ Preventing hazards
If the mains connection cable for this machine is damaged, it must be replaced by the manufacturer, the Customer Service Department or a similarly qualified person.

Observe the enclosed wiring diagram.

Reference to external machines

A reference to external hardware appears.

- Confirm with the *OK* symbol.

If using a Connector Box, connect it before initial commissioning. The washing machine must be disconnected from the mains to do this. Then start the commissioning process.

Optional accessories

Only use genuine Miele spare parts and accessories with this machine.
Using spare parts or accessories from other manufacturers will invalidate the warranty, and Miele cannot accept liability.

Connector Box

The Connector Box allows external hardware from Miele and other suppliers to be connected to the Miele Professional washing machine.

The Connector Box is supplied with mains voltage by the Miele Professional washing machine.

The separately available set consists of the Connector Box and fasteners for installation on the machine or on the wall.

Peak load / energy management

A peak-load or energy management system can be connected via the Connector Box.

The energy management system monitors the energy consumption of a system and deactivates individual pieces of equipment temporarily by means of the peak-load negotiation in order to ensure that certain total load limits are not exceeded.

When the peak-load function is activated, the heating is deactivated and the programme stopped. A message appears in the display to inform you of this.

The programme is resumed automatically when the peak-load function finishes.

Liquid dispensing connection

External liquid dispensing pumps with a “container empty” indicator and/or flowmeter can be used via the Connector Box to dispense liquid detergents.

The dispensing pumps can only be programmed by the Miele Customer Service Department.

It is particularly important to follow the manufacturer’s instructions when using a combination of cleaning agents and special application products.

Payment device

The washing machine can be fitted with a single-machine payment system as an optional accessory via the Connector Box.

The programming required for connecting a payment system can be carried out during the initial commissioning process. After initial commissioning, changes may only be carried out by your Miele dealer or the Miele Customer Service Department.

Please note that the status of the Connector Box must be set to “on” in the supervisor level as required.

WiFi/LAN interface

The washing machine is equipped with a WiFi/LAN interface for exchanging data.

The data interface provided on the LAN connection complies with SELV (Safety Extra Low Voltage) in accordance with EN 60950. The LAN connection uses a RJ45 connector in accordance with EIA/TIA 568-B.

Connected machines must also comply with SELV.

Plinth (APWM037/038/039)

The washing machine can be installed on a plinth (open or box plinth, available as an optional Miele accessory).

Elevating the washing machine gives a better ergonomic working position when loading or unloading. It also simplifies the installation of a drain connection.

⚠ The washing machine must be secured to the plinth immediately after installation. The plinth must be secured to the floor.
There is a risk of the washing machine falling off a raised plinth during a spin cycle if it is not secured.

Opening the supervisor level

■ Switch on the washing machine.

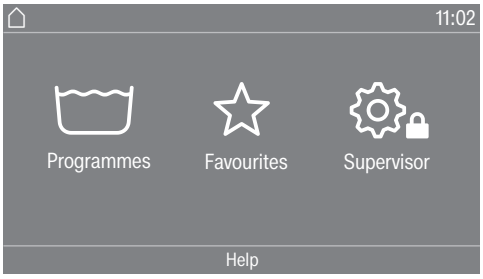

■ Touch the Supervisor selection area.

The display will change to the Supervisor level menu.

Code-based access

The supervisor level is accessed using a code.

The code is **000** (factory default).

After entering the code, you will be in the supervisor level. The individual setting options are described in the following sections.

Changing the code

You can alter the supervisor level access code to protect the washing machine from unauthorised access.

Please inform the Miele Customer Service Department if you have forgotten your new code. The Customer Service Department will have to reset the code.
Make a note of your new code and store it in a safe place.

Closing the Settings menu

■ Touch the symbol.

The display will then go back to the previous menu level.

■ Touch the symbol.

The display will change to the main menu.

Operation/display

Language

The display can be set to appear in one of several different languages. To select the permanent supervisor language you want, go to the Languages sub-menu.

When a programme is running, you can change the user language using the sensor control.

Language access

The display can be set to one of several different user languages. This setting allows you to determine how languages can be selected.

International

6 languages are available. The sensor control is not active. Note the setting Set languages.

Language selection

The sensor control can be used to select a language. All languages are available (factory default).

You can change the order of the first 4 languages. These slots are allocated to the most commonly used languages.

Standard language

The user language cannot be changed. The user language is the same as the supervisor language. The sensor control is not active.

Set languages

The languages for the setting Language entry International can be changed.

6 languages can be selected. All languages are available.

If you wish to add a new language to the language menu:

- First select the language you want to replace.

All available languages are displayed.

- Select and confirm the language to replace the previous language.

The new language appears instead of the old one.

Display brightness

The brightness of the display can be altered. The setting depends on the various lighting conditions in the place of installation.

It can be set to one of 10 different levels.

Time

After selecting the clock format, you can set the time of day.

Time format

- 24 h clock
- 12 h clock
- No clock

Set

- The time can be set.

Date

The date can be set after selecting the date format.

Date format

- DD.MM.YYYY
- YYYY.MM.DD
- MM.DD.YYYY

Date

- The date can be set.

Volume

The volume for various sounds can be changed.

- Finish tone
- Keypad tone
- Welcome tone

  It can be set to one of 7 different levels or switched off altogether.
- Fault tone

  The fault tone can be activated or deactivated.

Visibility parameters

Various parameters, such as the temperature, spin speed, Extras, etc., are displayed when a programme is selected. You can decide which parameters should not be displayed. The parameters cannot be changed/are no longer displayed.

Factory default: all parameters are visible (marked in orange)

Appliance off status

In order to save energy, the washing machine can be set to switch to standby mode automatically after the end of the programme or if no further selection is made. In the default setting, the machine will not switch to standby mode automatically.

Changing this setting leads to increased energy consumption.

- No switch-off (factory default)
- Switch-off after 15 minutes
- Switch-off after 20 minutes
- Switch-off after 30 minutes

Supervisor level

Delay start

The delay start (timer) display can be switched on or off.

Factory default: on

Memory

The washing machine will save the settings (temperature, spin speed and some of the options) which have been selected for a wash programme after the programme has started.

When the wash programme is chosen again, the saved settings will appear on the washing machine's display.

Factory default: off

Change order

The skip function can be switched on or off.

Temperature unit

You can select the unit for the temperature display (°C/°F).

Weight unit

You can decide whether load sizes are displayed in "kg" or "lbs". You can also switch this information off altogether.

Supervisor code

You can alter the access code to the supervisor level.

- Enter the current code.
- Enter a new code.

WiFi

Control the networking of your washing machine.

- Setup

  This message only appears if the washing machine has not yet been connected to a WiFi network.
- Deactivate (visible when the network is activated)

  The network remains set up; the WiFi function is switched off.
- Activate (visible if the network is deactivated)

  The WiFi function is reactivated.
- Connection status (visible when the network is activated)
  - The quality of WiFi reception
  - The network name
  - The IP address
- Set up again (visible if already set up)

  Resets the WiFi login (network) to immediately re-establish a new connection.
- Reset (visible if already set up)

  The network is no longer set up. A new connection has to be established in order to use the network again.
  - The WiFi is switched off
  - The WiFi connection will be reset to the factory default setting

Programme selection

Controls

Tip: Start by configuring all necessary settings and changes to the washing machine before adjusting any of the options below.

If “Laundrette, basic” or “Laundrette Logo” is selected, the supervisor level can no longer be opened from the display after the *Supervisor level* menu is closed. Please follow the instructions below for special access to the supervisor level if you wish to change any other settings.

Standard (factory default).

All functions and programmes can be displayed.

Launderette, basic

Up to 12 programmes are available. Go to Favourite programmes to select which programmes are to be listed.

Launderette logo

Up to 12 programmes are available. Go to Favourite programmes to select which programmes are to be listed.

External programme selection

Programmes are selected using a communication module, e.g. an external terminal.

Programme packages

The selection of programmes can be expanded by activating single programmes from the target group programme packages.

The programmes selected from the programme packages (marked in orange) are displayed during programme selection.

Favourite programmes

After switching on, you can also select a programme via: ☆ Favourites.
24 programmes can be stored as favourites based on your own priorities and requirements.

These favourites will also be made available in the control options

- *Launderette logo*
- *Launderette, basic*.

You can specify the control option under Controls.

Tip: You can assign a separate coloured frame to each programme. In this case, the Prog. colour allocation setting must be set to *On*.

Changing favourite programmes

■ Select the programme you wish to change or replace.

■ Confirm the programme or the setting to be changed.

Another menu opens, enabling you to select a new programme or change the parameters.

■ Confirm by touching the Save selection area.

Your selection is now active.

Sort programmes

Programmes can be moved within the programme list and in the favourites list.

Factory default: off

Moving programmes

■ Touch the selection area for the programme you want to move.

■ Press and hold the selection area until the frame changes.

■ Drag the programme to the required place.

Prog. colour allocation

You can assign a frame to a favourite programme. In the list of favourites, each favourite programme is given a coloured frame, which can be adjusted.

Factory default: on

Expert code

A code has to be entered to cancel a disinfection programme. The code can be modified.

The expert code is not the same as the supervisor level code.

The code is: 0 0 0

Make a note of your new code if you ever change it.

Process technology

Anti-crease

The Anti-crease function reduces creasing after the end of the programme. At the end of the programme, the drum continues to turn at intervals for up to 30 minutes.

The washing machine door can be opened at any time.

Factory default: on

Automatic drainage

Automatic water drainage can be switched on or off. Automatic water drainage means that the suds are always drained away after the end of a programme. This is also the case for programmes that reach the programme end with water still in the drum.

Service

Service interval

Service information can appear in the display. You can configure whether a date or the number of operating hours is displayed.

You can select up to 3 messages with their own text.

Your message is displayed at the end of the programme and can be acknowledged with *OK*. The same message appears at the end of the next programme.

Settings

This setting allows you to determine the interval (by hours or date) at which the message appears.

- Factory default: off
- By time
  You can then select a time interval from 1–9999 hours.
- By date
  You can then enter a date.

Message text

Enter your message for your planned maintenance work.

Reset display

The message appears until the display is permanently reset. The message then appears again once the next interval is reached.

External applications

Payment system lock

The payment device lock can be switched on or off. When the lock is switched on, various time intervals can be selected.

Connector box

External hardware is connected via the Connector Box. This can be switched on or off.

The Connector Box must be selected in order for settings to be made in the Dispensing menu.

Automatic dispensing

Automatic dispensing can be switched on or off.

Automatic dispensing can be activated via the Connector Box or the COM module.

Dosage

The Connector Box must be switched on in order for settings to be adopted in the Dispensing menu.

1–6 dispensing pumps can be switched on.

Further settings can be made after activating the dispensing pump.

- Deactivate disp. pump
- Calibration
- Flow rate (new): ml/min
- Correction factor
- Container size
- Adv. warning level reminder
- Reset adv. warning
- Level reminder
- Flow meter

Peak load prevention

The peak-load prevention function can be switched on or off. With this function, the execution of a wash programme is not affected when a peak-load signal is in place. The heater stays switched on.

Appliance parameters

Maximum spin speed

The maximum spin speed can be set via a keypad.

Max. possible temperature

The maximum temperature can be set via a keypad.

Legal information

Open source licences

You can view information here (see WiFi data protection).

Technical data

PWM 509/511 machine data

Electrical connection

Supply voltage	See data plate
Frequency	See data plate
Power rating	See data plate
Current consumption	See data plate
Fuse rating	See data plate
Heater rating	See data plate

PWM 509 installation dimensions

Casing width (without add-on components)	692 mm
Casing height (without add-on components)	1012 mm
Casing depth (without add-on components)	718 mm
Overall machine width	700 mm
Overall machine height	1020 mm
Overall machine depth	730 mm
Minimum width of transport opening	800 mm
Minimum safety distance between wall and back of machine	400 mm
Diameter of door opening	370 mm
Door opening angle	180°

PWM 511 installation dimensions

Casing width (without add-on components)	692 mm
Casing height (without add-on components)	1012 mm
Casing depth (without add-on components)	818 mm
Overall machine width	700 mm
Overall machine height	1020 mm
Overall machine depth	845 mm
Minimum width of transport opening	800 mm
Minimum safety distance between wall and back of machine	400 mm
Diameter of door opening	370 mm
Door opening angle	180°

Weight and floor load

Net weight	see installation plan
Max. floor load in operation	see installation plan

Emission values

Emission sound pressure level in workplace in accordance with EN ISO 11204/11203	< 70 dB(A) re 20 µPa
Sound power level, EN ISO 9614-2	< 80 dB(A)

WiFi

Frequency range of the WiFi module	2.400–2.4835 GHz
Maximum transmission power of the WiFi module	< 100 mW

UK declaration of conformity

UKCA mark (UK only)	The Supply of Machinery (Safety) Regulations 2008

Product safety

Product safety standard	EN 60335-1, EN 50571, IEC 60335-1, IEC 60335-2-7, EN 50570, IEC 60335-2-11

EU declaration of conformity

Miele hereby declares that this washing machine complies with Directive 2014/53/EU.
The complete text of the EU declaration of conformity is available from one of the following Internet addresses:

- Under “Products”, “Download” at www.miele.de/professional/index.htm
- Or go to http://www.miele.de/professional/gebrauchsanweisungen-177.htm and enter the name of the product or the serial number

Data protection and data security

When you activate the networking function and connect your machine to the Internet, your machine sends the following data to the Miele Cloud:

- Machine serial number
- Machine model and technical features
- Machine status
- Information about the software status of your machine

Initially, this data cannot be assigned to a specific user and is not saved permanently. Data cannot be saved permanently or assigned to a specific user until after you have linked your machine to a user. Data transmission and processing are governed by Miele's strict security standards.

Factory default settings for network configuration

You can reset all of the settings on the communication module or your integrated WiFi module to the factory default settings. The network configuration should be reset whenever a machine is being disposed of or sold, or if a used machine is being put into operation. This is the only way to ensure that all personal data has been removed and the previous owner will no longer be able to access the machine.

Copyright and licences

For the purpose of operating and controlling the communication module, Miele uses proprietary or third-party software that is not covered by open source licensing terms. This software/these software components are protected by copyright. The copyrights held by Miele and third parties must be respected.

Furthermore, this communication module contains software components which are distributed under open source licensing terms. The open source components contained in the machine along with the corresponding copyright notices, copies of the licensing terms valid at the time and any further information can be accessed locally by IP using a web browser *(https://<IP address>/Licenses)*. The liability and warranty arrangements for the open source licences displayed in this location only apply in relation to the respective rights holders.

Miele

International Service Contacts
America: +1 866 694 5849
Australia, Asia, Oceania: +61 3 9764 7880
Europe, Africa, Middle East: +49 5241 89 66 877
E-mail: service@miele-marine.com

www.miele.com/marine-service

Manufacturer: Miele & Cie. KG, Carl-Miele-Straße 29, 33332 Gütersloh, Germany

Alteration rights reserved / Publication date: 2023-03-27
M.-Nr. 12 282 010 / 01

CE