Miele

Operating instructions for washing machines

To avoid the risk of accidents or damage to the machine, it is **essential** to read these instructions before it is installed and used for the first time.

en-SG

M.-Nr. 11 679 310

Contents

Warning and Safety instructions 5

Operating the washing machine 12
Control panel 12
How the sensor controls work 13
How the sensor controls work 13

Caring for the environment 14

Before using for the first time 15
Removing the open spanner 15

Washing environmentally and economically 17

1. Prepare the laundry 18

2. Load the washing machine 19

3. Select a programme 20

4. Add detergent 22
Detergent dispenser drawer 22
CapDosing 24

5. Start the programme 26
Adding laundry during a programme sequence (AddLoad) 26

6. End of programme 27

Spinning 28

Delay start 29

Programme chart 30

Extra options 33
Short 33
Water + ... 33
Soak 33
Pre-wash 33
The following extras can be selected in addition to the programmes 34

Garment care label symbols 35

Programme sequence 36

Changing the programme sequence 38
Changing a programme (safety lock) 38
Cancelling a programme 38

Contents

Detergent 39
The correct detergent 39
Water softeners 39
Dispensing aids 39
Fabric conditioner and liquid starch 39
Recommended Miele detergents 41
Recommended detergents in accordance with Directive (EU) Nr. 1015/2010 42

Cleaning and care 43
Cleaning the external casing and the control panel 43
Cleaning the detergent dispenser drawer 43
Hygiene info(Cleaning the drum) 45
Cleaning the water inlet filter 45

Problem solving guide 46
The programme does not start 46
The programme is cancelled and a fault indicator light lights up in the control panel 47
During the programme, a symbol appears in the time display 48
At the end of the programme, an indicator light lights up in the control panel 48
General problems with the washing machine 49
An unsatisfactory wash result 51
The door will not open 52
Opening the door in the event of a blocked drain outlet and/or power cut 53

Service 55
Contact in the event of a fault 55
Optional accessories 55
Guarantee 55

Installation 56
Front view 56
Rear view 57
Installation surface 58
Transporting the washing machine to its installation site 58
Removing the transit bars 59
Fitting the transit bars 61
Levelling the machine 62
- Screwing out and adjusting the feet 62
- Installing under a continuous worktop 63
- Washer-dryer stack 63

The water protection system 64
Connection to the water supply 65
- Connecting the water inlet 65

Contents

Water drainage 66
Fitting the elbow 66
Direct connection to a sink drain outlet 67
Electrical connection 68

Consumption data 69
Note for test institutes 69
Selecting test programmes 69

Technical data 70

Programmable functions 71
Opening the programming level 71
Choosing and selecting a programmable function 71
Editing and saving a programmable function 72
Exit programming level 72
P13 Keypad tone 72
P14 Lock code 73
P22 Indicator switch-off behaviour 73
P24 Memory 74
P26 Longer pre-wash Cottons 74
P27 Soak duration 74
P28 Gentle action 74
P29 Reduce temperature 75
P30 Water plus 75
P31 Water plus level 75
P32 Maximum rinse level 75
P33 Suds cooling 76
P34 Anti-crease 76
P49 Low water pressure 76

Detergents and care products 77
Detergent 77
Specialist detergents 78
Fabric care 79
Additives 79
Machine care 79

This washing machine complies with all current local and national safety requirements. However, inappropriate use can lead to personal injury and damage to property.

Read the operating instructions carefully before using the washing machine. They contain important information on safety, installation, use and maintenance. This prevents both personal injury and damage to the washing machine.

In accordance with standard IEC 60335-1, Miele expressly and strongly advises that you read and follow the instructions in the chapter on installing the washing machine as well as the safety instructions and warnings.

Miele cannot be held liable for damage caused by non-compliance with these instructions.

Keep these operating instructions in a safe place and pass them on to any future owner.

Correct application

▶ This washing machine is intended for use in domestic households and similar working and residential environments.

▶ The washing machine is not intended for outdoor use.

▶ It must be used only as a domestic appliance to wash items which are specified by the manufacturer as being washable on the wash care label. Miele cannot be held liable for damage resulting from incorrect or improper use or operation.

▶ The washing machine can only be used by people with reduced physical, sensory or mental capabilities, or lack of experience or knowledge, if they are supervised whilst using it or have been shown how to use it safely and recognise and understand the consequences of incorrect operation.

Safety with children

▶ Children under 8 years of age must be kept away from the washing machine unless they are constantly supervised.

▶ Children 8 years and older may only use the washing machine unsupervised if they have been shown how to use it safely and recognise and understand the consequences of incorrect operation.

▶ Children must not be allowed to clean or maintain the washing machine unsupervised.

▶ Please supervise children in the vicinity of the washing machine and do not let them play with it.

Technical safety

▶ Please observe the instructions in “Installation” and “Technical data”.

▶ Before setting up the washing machine, check it for any externally visible damage. Do not install or use a damaged machine.

▶ Before connecting the washing machine, ensure that the connection data on the data plate (fuse rating, voltage and frequency) match the mains electricity supply. If in any doubt, consult a qualified electrician.

▶ Temporary or permanent operation on an autonomous power supply system or a power supply system that is not synchronised with the mains power supply (e.g. island networks, back-up systems) is possible. A prerequisite for operation is that the power supply system complies with the specifications of EN 50160 or an equivalent standard.
The function and operation of the protective measures provided in the domestic electrical installation and in this Miele product must also be maintained in isolated operation or in operation that is not synchronised with the mains power supply, or these measures must be replaced by equivalent measures in the installation. As described, for example, in the current version of BS OHSAS 18001–2 ISO 45001.

▶ The electrical safety of this washing machine can only be guaranteed when correctly earthed.
It is essential that this standard safety requirement is met. If in any doubt, please have the wiring system of the building tested by a qualified electrician.
Miele cannot be held liable for the consequences of an inadequate earthing system (e.g. electric shock).

▶ Do not connect the washing machine to the mains electricity supply by a multi-socket adapter, extension lead or similar. These do not guarantee the required safety of the machine (fire hazard due to the risk of overheating).

▶ Faulty components must only be replaced by genuine Miele original spare parts. Only when these parts are fitted can Miele guarantee the safety standards of the machine.

▶ The electrical socket must be easily accessible after installation so that the machine can be disconnected from the electricity supply if necessary.

▶ Unauthorised repairs could result in unforeseen dangers for the user, for which the manufacturer cannot accept liability. Repairs should only be undertaken by a Miele authorised service technician, otherwise any subsequent damage will not be covered by the warranty.

▶ While the washing machine is under warranty, repairs should only be undertaken by a Miele authorised service technician. Otherwise the warranty will be invalidated.

▶ If the electrical connection cable is faulty it must only be replaced by a Miele authorised service technician to protect the user from danger.

▶ The machine must be isolated from the electricity supply when cleaning and maintaining the machine and in the event of a fault.

▶ The machine must only be connected to the on-site water supply using a new hose kit. Old hose kits must not be re-used. Check the condition of the hoses regularly so that you can replace them in good time and avoid the risk of any water damage.

▶ The water flow pressure must be at least 100 kPa and should not exceed 1000 kPa.

▶ In areas which may be subject to infestation by cockroaches or other vermin, pay particular attention to keeping the machine and its surroundings in a clean condition at all times. Any damage which may be caused by cockroaches or other vermin will not be covered by the warranty.

▶ The machine must not be used in a non-stationary location (e.g. on a ship).

▶ Do not make any alterations to the machine, unless authorised to do so by Miele.

Correct use

▶ Do not install the washing machine in a room where there is a risk of frost. Frozen hoses may burst or split. The reliability of the electronic control unit may be impaired at temperatures below freezing point.

▶ Before using the machine for the first time, check that the transit bars at the rear of the machine have been removed (see “Installation - Removing the transit bars”). During spinning, a transit bar which is still in place may result in damage to both the machine and adjacent furniture or appliances.

▶ Turn off the stopcock if the machine is to be left for any length of time (e.g. holiday), especially if there is no floor drain (gully) in the immediate vicinity.

▶ Flooding danger.
If hooking the drain hose into a wash basin, check that the water can drain off quickly enough to prevent the sink from overflowing. Make sure the drain hose is secure, so that the force of the water flowing out of the hose does not dislodge it.

▶ Take care to ensure that foreign objects (e.g. nails, pins, coins, paper clips) do not find their way into the machine with the laundry. These may damage components of the machine (e.g. suds container, drum), which in turn can result in damage to the laundry.

▶ Take care when opening the drum door after using the steam function. Danger of burning due to escaping steam and the high temperature of the surface of the drum as well as the porthole glass. Stand back away from the machine and wait until the steam has dissipated.

▶ The maximum load for this washing machine is 7.0 kg (dry weight). See the “Programme chart” for the maximum recommended loads for individual programmes.

▶ If the correct amount of detergent is dispensed, the machine should not need to be descaled. If, however, you do wish to descale it, only use a proprietary natural citric acid based descaling agent. Miele recommends using Miele descaling agent which is available to order from your Miele dealer. Strictly observe the instructions on the packaging.

▶ Textiles which have been pre-treated in solvent based cleaning agents must be thoroughly rinsed in clean water before being washed in the machine.

▶ Do not use solvent based cleaning agents, e.g. those containing benzine, in this machine, as this may result in damage to component parts and create toxic fumes. Such agents also pose a fire and explosion hazard.

▶ Do not use solvent based cleaning agents, e.g. those containing benzine, to clean the surfaces of the machine. They can cause damage to plastic surfaces.

▶ Only use dyes specified by the manufacturer as being suitable for use in a domestic washing machine. Always observe the manufacturer's instructions carefully.

▶ Colour run and dye removers contain sulphur compounds which can cause damage such as corrosion. Do not use these products in this machine.

▶ If detergent comes into contact with the eyes, rinse them thoroughly with lukewarm water immediately. If swallowed, seek medical assistance immediately and retain the packaging or label for reference. Those with skin problems or sensitive skin should avoid their skin coming into contact with detergent.

Accessories and spare parts

▶ Only use original Miele accessories and spare parts. If other parts are used, warranty, performance and product liability claims will be invalidated.

▶ A Miele tumble dryer can be stacked on top of a Miele washing machine using the appropriate stacking kit (available as an optional accessory). Please make sure you order the correct one for the Miele washing machine and Miele tumble dryer.

▶ If installing the machine on a Miele plinth, (available as an optional accessory, depending on country), please make sure you order the correct one for this washing machine.

▶ Miele will guarantee to supply functional spare parts for a minimum of 10 years and up to 15 years following the discontinuation of your washing machine.

Miele cannot be held liable for damage caused by non-compliance with these Warning and Safety instructions.

Operating the washing machine

Control panel

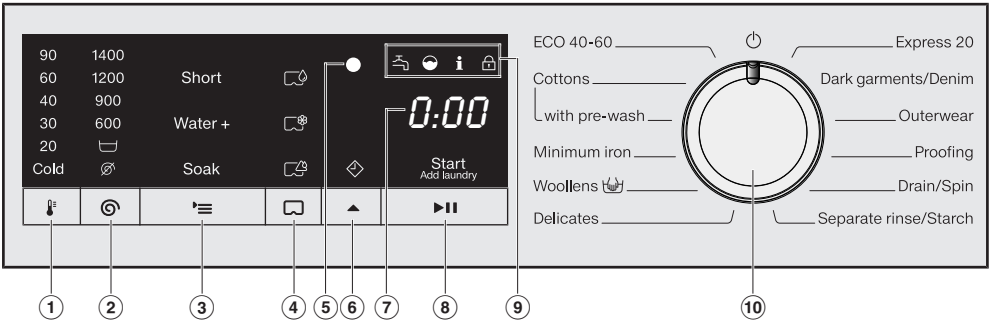

① **Sensor control** (temperature) for selecting the temperature

② **Sensor control** (spin speed) for selecting the spin speed

③ **Sensor control** (extra options) for selecting the extra options

④ **Sensor control** (CapDosing) for activating detergent dispensing via a capsule

⑤ **Optical interface**
This is used by the Service department as a transmission point.

⑥ **Sensor control** (Delay start) for activating the Delay start function. With the Delay start function, you can delay the start of the programme. The start of the programme can be delayed from 30 minutes up to a maximum of 24 hours. This allows you to make use of night-time economy electricity rates, for example.

⑦ **Time display**
After the programme has started, the programme duration will appear in the display in hours and minutes. When Delay start is being used, the programme duration will appear after the Delay start time has elapsed.

⑧ **Sensor control** (start/add laundry)

Ⓐ The programme can be started as soon as *Start/Add laundry* is flashing on and off. Touching the sensor control starts the selected programme. *Start/Add laundry* lights up constantly.

Ⓑ Once the programme has been started, the sensor control allows you to add laundry.

⑨ **Indicator lights**

- lights up if there are faults affecting the water inlet and drainage
- lights up if excess detergent was used
- lights up as a reminder about hygiene information
- The *Add laundry* function cannot be selected.

⑩ **Programme selector**
for selecting programmes and for switching off the appliance. The washing machine is switched on when you select a programme, and switched off by turning the programme selector to the ⏻ position.

How the sensor controls work

The sensor controls control the values located above them.

The ①, ②, ③, ④, ⑤ and ⑥ sensor controls react to fingertip contact.

When a programme is selected, values are pre-set for the and sensor controls. Touching the sensor control decreases the value. After the smallest value is reached, the display returns to the maximum value.

How the sensor controls work

The sensor controls control the values located above them.

The ①, ②, ③, ④, ⑤ and ⑥ sensor controls react to fingertip contact.

When a programme is selected, values are pre-set for the and sensor controls. Touching the sensor control decreases the value. After the smallest value is reached, the display returns to the maximum value.

Caring for the environment

Disposing of the packaging material

The packaging material is used for handling and protects the appliance from transport damage. The packaging material used is selected from materials which are environmentally friendly for disposal and can generally be recycled.

Recycling the packaging material reduces the use of raw materials. Use material-specific collection points for valuable materials and take advantage of return options. Your Miele dealer will take the packaging material away.

Disposing of your old appliance

Electrical and electronic appliances often contain valuable materials. They also contain specific materials, compounds and components, which were essential for their correct function and safety. These could be hazardous to human health and to the environment if disposed of with your domestic waste or if handled incorrectly. Please do not, therefore, dispose of your old appliance with your household waste.

Please dispose of it at your local community waste collection / recycling centre for electrical and electronic appliances, or contact your dealer or Miele for advice. You are also responsible (by law, depending on territory) for deleting any personal data that may be stored on the appliance being disposed of. Please ensure that your old appliance poses no risk to children while being stored prior to disposal.

⚠ Damage resulting from incorrect installation and connection.
Installing and connecting the washing machine incorrectly will cause serious property damage.
See “Installation”.

Removing the open spanner

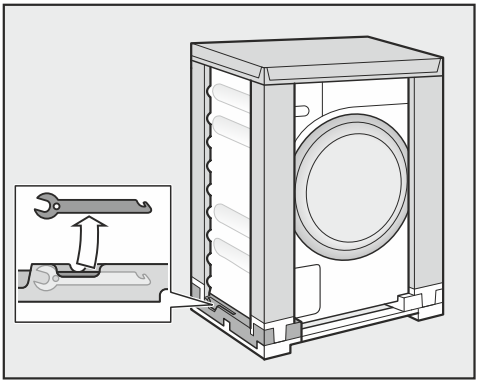

■ Take out the open spanner for removing the transit bars from the bottom left of the transport packaging.

This washing machine has undergone a complete functional test at the factory and there will be some residual water in the drum from this process.

Remove the drain hose elbow from the drum

An elbow piece for the drain hose is stored in the drum.

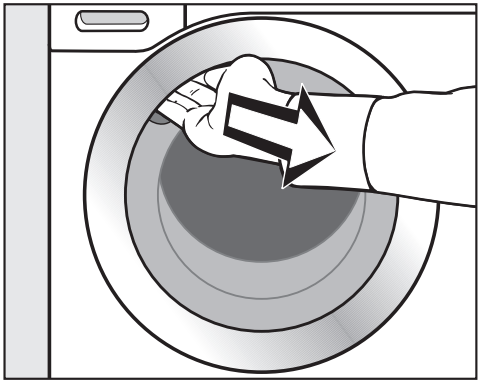

■ Reach under the door grip and pull the door open.

■ Remove the elbow piece.

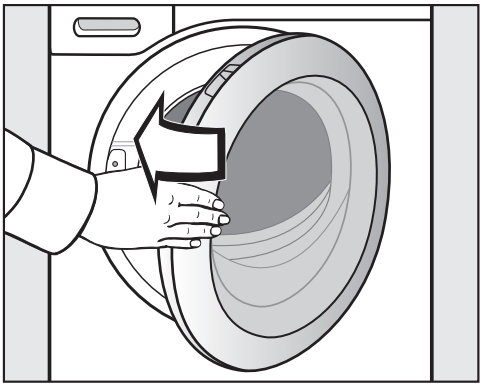

■ Shut the door with a gentle swing.

Removing the protective foil and stickers

■ Remove:

- Any protective film from the door
- Any stickers from the front and the lid

Please do not remove any labels (e.g. the data plate) which are visible when you open the door.

Running the first programme

For optimum water and energy consumption and excellent wash results, it is important to calibrate the washing machine.

To do this, the *Cottons* programme **must** be run without laundry and without detergent.

■ Open the stopcock.

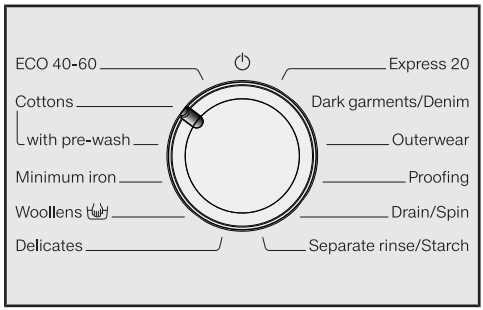

■ Turn the programme selector to the *Cottons* position.

The washing machine is now switched on and the temperature *40* and spin speed *1400* lights up.

■ Touch the ▶II sensor control.

The programme will start.

Opening the door at the end of the programme

The door remains locked during the anti-crease phase. The indicators light up for the first 15 minutes.

■ Turn the programme selector to the ⏻ position.

-0- appears on the time display and the 🔒 indicator light goes out.

The door will unlock.

Tip: After the anti-crease phase, the washing machine will have switched off and the door unlocked automatically.

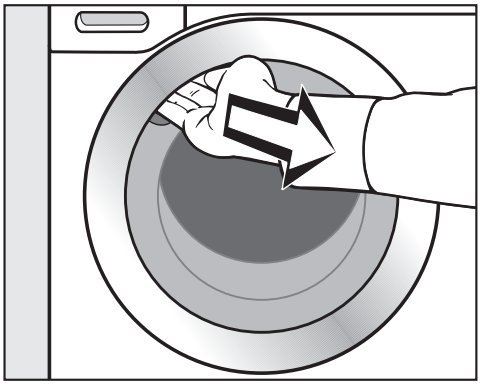

■ Reach under the recessed grip and pull the door open.

Tip: Leave the door slightly open to allow the drum to dry.

Initial commissioning is now complete.

Energy and water consumption

- To get the most out of your machine, load the maximum dry load size for the wash programme you are using. This will keep the energy and water consumption to a minimum in relation to the size of the load.
- Programmes that are more efficient with regard to energy and water consumption generally have a longer running time. By extending the programme running time, the wash temperature that is actually reached can be reduced while still providing the same wash results.

  For example, the ECO 40-60 programme has a longer running time than the Cottons 40 °C or 60 °C programme. The ECO 40-60 programme is more efficient in terms of energy and water consumption but has a longer running time.
- Use the Express 20 programme for small, lightly soiled loads.
- Modern detergents make it possible to wash at lower temperatures (e.g. 20 °C). Using lower temperature settings will save energy.

Hygiene in the washing machine

Washing at low temperatures and/or using liquid detergents can cause bacteria and odours to build up in the washing machine. Miele therefore recommends cleaning the washing machine once every month.

When the **i** indicator light appears in the control panel, the washing machine must be cleaned.

Information about subsequent tumble drying

The spin speed selected affects the residual moisture in the laundry and the sound emissions of the washing machine.

The higher the spin speed, the lower the residual moisture in the laundry. However, the sound emissions of the washing machine will increase.

Select the highest possible spin speed for the wash programme to save energy in the subsequent tumble dryer cycle.

Detergent

- Do not exceed the amounts of detergent recommended by the manufacturer on the packaging.
- Adjust the dosage to the degree of soiling of the laundry.
- Reduce the amount of detergent with smaller loads (approx. ⅓ less than the amount recommended can be used when washing a half load).

1. Prepare the laundry

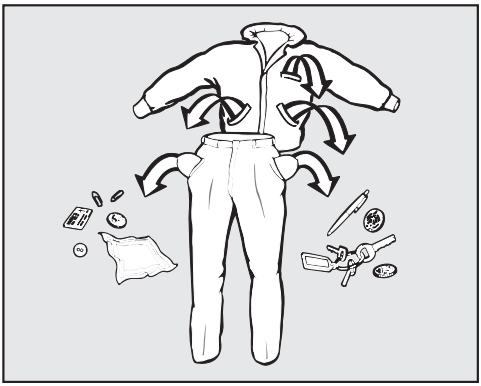

■ Empty all pockets.

⚠ Damage due to foreign objects.
Nails, coins, paper clips, and so on can cause damage to garments and components in the machine.
Check the laundry before washing and remove any foreign objects.

Sort the laundry

■ Sort the laundry by colour and by care label. Most garments have a textile care label in the collar or side seam.

Tip: Dark textiles often contain excess dye and should be washed separately several times before being included in a mixed load. Always wash whites and coloureds separately.

Pre-treating stains

■ Badly soiled areas and stains should be cleaned as soon as possible, preferably whilst still fresh. Spillages should be carefully dabbed off using a soft, colourfast cloth. Do not rub.

Tip: Stains (e.g. blood, egg, coffee, tea) can be pre-treated using some handy tricks which can be found in the Miele guide to laundry care.

⚠ Damage due to solvent-based cleaning agents
Cleaning agents containing benzine, stain remover, etc., can damage plastic parts.
When pre-treating textiles, make sure that any plastic parts (e.g. buttons) do not come into contact with cleaning agent.

⚠ Risk of explosion due to solvent-based cleaning agents.
When using solvent-based cleaning agents, an explosive mixture may develop.
Never use solvent-based cleaning agents in the washing machine.

General tips

- Curtains: remove rollers and lead weights or place in a laundry bag.
- Sew in or remove any loose underwiring in bras.
- Close any zips, attach velcro fasteners, fasten hooks and eyes, etc. before washing.
- Fasten duvet covers and pillow cases to prevent small items from becoming rolled up inside them.

Do not wash items which are specified by the manufacturer as **not washable** according to the symbol on the care label (symbol).

Open the door

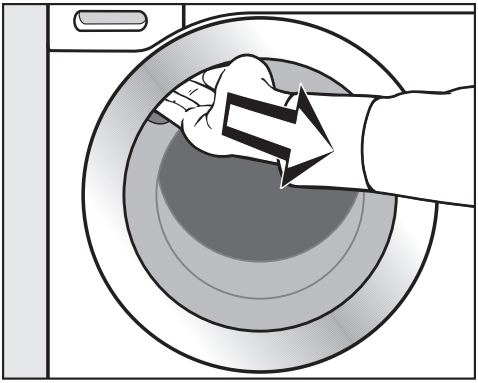

■ Reach under the door grip and pull the door open.

Check the drum for pets or foreign objects before loading it with laundry.

The most efficient use of energy and water is achieved when a full load is washed. However, do not overload as this makes cleaning less effective and causes creases.

■ Unfold the laundry and load loosely into the drum.

Mixing both large and small items gives better wash results and also helps to distribute the load evenly during spinning.

Tip: Please note the maximum load size for different wash programmes.

Close the door

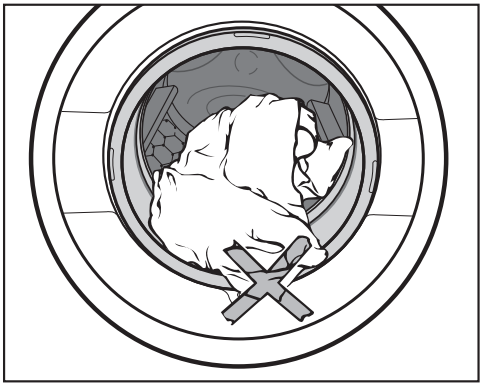

■ Make sure that no items are caught between the door and the seal.

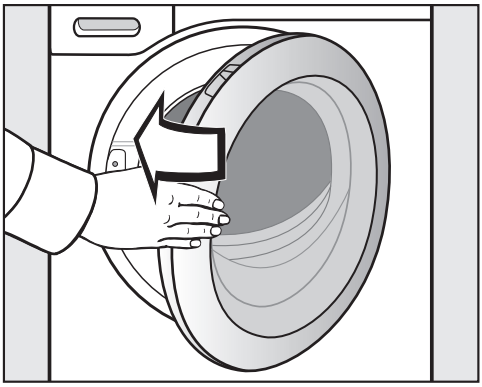

■ Shut the door with a gentle swing.

3. Select a programme

Programme selection

The washing machine is switched on by turning the programme selector to a wash programme.

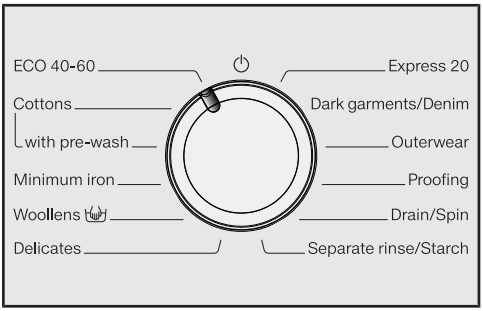

- Turn the programme selector to the required programme.

The estimated wash time is shown on the time display and the pre-set temperature and spin speed light up.

Selecting a temperature and spin speed

The wash programme's pre-set temperature and spin speed light up brightly.

The temperatures reached inside the washing machine might not be the same as the temperatures selected. Perfect wash results are achieved through a combination of energy use and wash duration.

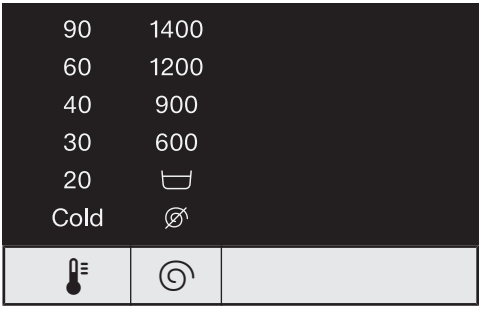

- Touch the sensor control to change the pre-set temperature. Touching the sensor control decreases the value. After the smallest value is reached, the display jumps to the maximum value.
- Touch the sensor control to change the pre-set spin speed. Touching the sensor control decreases the value. After the smallest value is reached, the display jumps to the maximum value.

Selecting extra options

In some programmes, you can combine 2 extra options.

In other programmes, you can only select 1 extra option or there are no available extra options.

■ Touch the ≡ sensor control:

- **Once**: the *Short* extra option is selected and lights up.
- **2 times**: the *Water +* extra option is selected and lights up.
- **3 times**: the *Soak* extra option is selected and lights up.
- **4 times**: the *Short* and *Water +* extra options are selected and light up.
- **5 times**: the *Water +* and *Soak* extra options are selected and light up.
- **6 times**: all the extra options are switched off.

Please refer to “Extra options” for more information.

4. Add detergent

Detergent dispenser drawer

Any detergent suitable for automatic front loading washing machines can be used. Please observe the instructions for use and dosage on the detergent packaging.

Adding detergent

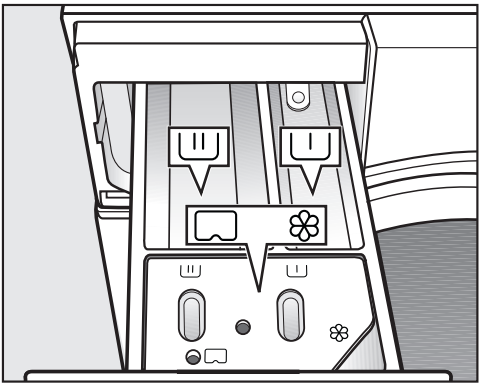

■ Pull out the detergent drawer and add detergent to the compartments.

I Detergent for the pre-wash

II Detergent for the main wash and soaking

❀ Fabric softener, liquid starch, or capsules

Adding fabric conditioner

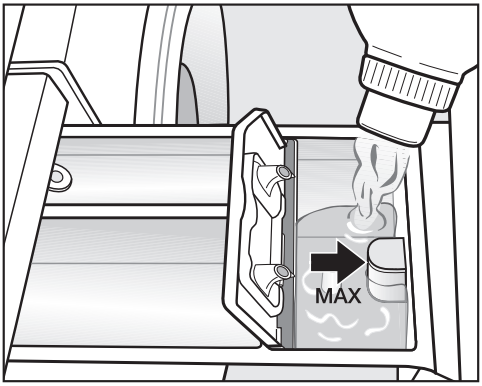

■ Add fabric conditioner or liquid starch to the ❀ compartment. **Do not exceed the maximum level mark.**

It will be automatically dispensed in the final rinse. At the end of the programme a small amount of water remains in the ❀ compartment.

Starch can make the siphon tube sticky.
If starching frequently, thoroughly clean the dispenser compartment, especially the siphon tube, regularly.

Tips on dosing

Adjust the detergent dosage to the level of soiling of the laundry and the size of the load. Reduce the amount of detergent with smaller loads (e.g. reduce the amount of detergent by ⅓ when washing a half load).

Too little detergent:

- Results in laundry not being cleaned properly and may cause it to become grey and hard to the touch over time.
- Can lead to a build-up of mould in the washing machine.
- Results in grease not being completely removed from the laundry.
- Can lead to limescale deposits on the heater elements.

Too much detergent

- Causes poor wash, rinse, and spin results.
- Causes higher water consumption as an extra rinse cycle is automatically activated.
- Is a greater burden on the environment.

Using liquid detergent with a pre-wash

Liquid detergent cannot be used for the main wash if the pre-wash has been selected.

Use powder detergent for the main wash.

Using detergent tablets or pods

Always put detergent tablets or pods directly in the drum with the laundry. They cannot be added via the detergent dispenser drawer.

4. Add detergent

CapDosing

Three different types of capsule are available:

- ❀ = Fabric care (e.g. fabric conditioner, proofing agent)
- = Additives (e.g. detergent enhancer)
- = Detergent (for the main wash only)

Each capsule contains the correct amount for one wash cycle.

Caps are available to order from Miele or from the Miele online shop (see the end of this booklet for contact details).

⚠ Capsules pose a health risk.
The ingredients of capsules can be hazardous to health if they are swallowed or come into contact with skin.
Keep capsules out of the reach of children.

Activating CapDosing

■ Touch the sensor control:

- **Once**: the symbol is selected and lights up.
- **2 times**: the ❀ symbol is selected and lights up.
- **3 times**: the symbol is selected and lights up.
- **4 times**: CapDosing is switched off.

Inserting a capsule

■ Open the detergent dispenser drawer.

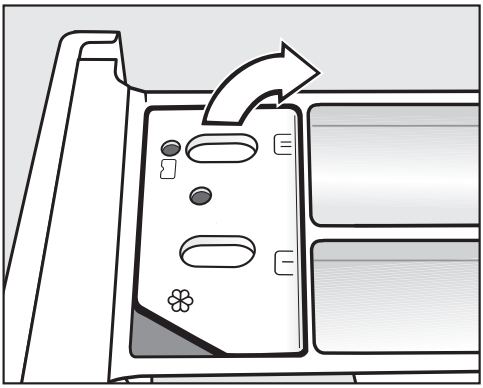

■ Open the lid of the ❀/ compartment.

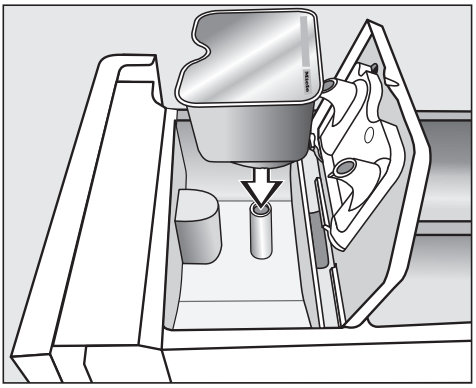

■ Press the capsule in firmly.

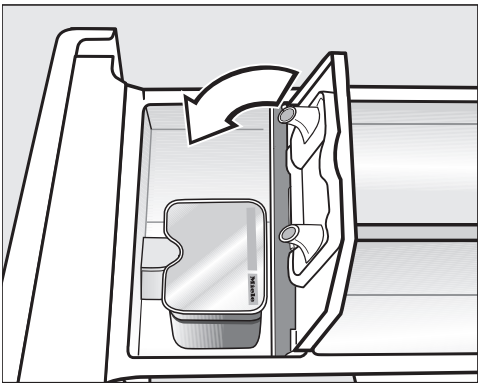

- Close the lid and press it firmly shut.
- Close the detergent dispenser drawer.

The capsule is opened by the act of inserting it in the detergent dispenser drawer. The contents can run out of the capsule if you then remove it from the drawer before it is used.

Dispose of opened capsules.

The wash programme will dispense the contents of the capsule at the correct time.

Water intake to the ❀ compartment is solely via the capsule.

Do not add any additional fabric conditioner to the ❀ compartment.

- Remove the empty capsule at the end of the programme.

For technical reasons a small amount of water will remain in the capsule.

5. Start the programme

Starting a programme

■ Touch the ▶II sensor control.

The door will lock and the programme will start.

If a Delay start time has been selected, this counts down on the time display. At the end of the Delay start time or immediately after the programme has started, the programme duration appears on the time display.

Adding laundry during a programme sequence (AddLoad)

Laundry can be added or removed at any time, provided that the 🔒 symbol is not illuminated in the display.

■ Touch the ▶II sensor control.

Rotating bars *[¯]* ... *[_]* ... *[¯]* are shown on the time display.

If the word *Add* appears on the time display, the door can be opened.

■ Open the door. Add or remove laundry.

■ Close the door.

■ Touch the ▶II sensor control.

The programme will continue.

Laundry cannot usually be added or removed if:

- The suds temperature is above 55 °C
- The water inside the drum is above a certain level

Opening the door and removing the laundry

The door remains locked during the anti-crease phase. The indicators light up for the first 15 minutes.

0:00 appears on the time display.

- Turn the programme selector to the ⏻ position.

The 🔒 indicator light will go out.

The door will unlock.

Tip: After the anti-crease phase, the door will have unlocked automatically.

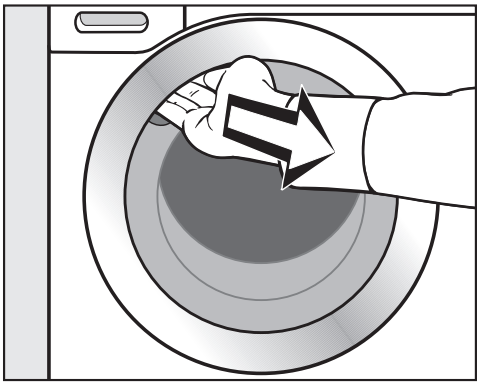

- Reach under the recessed grip and pull the door open.
- Remove the laundry.

Items left in the drum could discolour other items in the next wash or become discoloured themselves.
Remove all items from the drum.

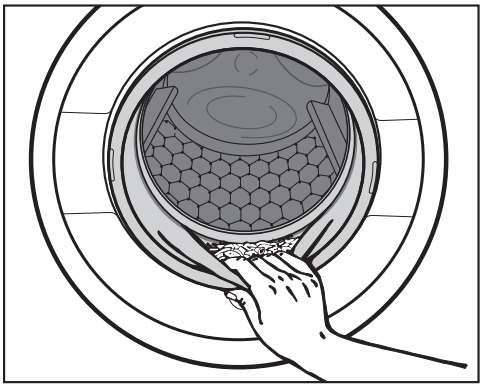

- Check the door sealing ring for any foreign objects.

Tip: Leave the door slightly open to allow the drum to dry.

- If applicable, remove the used capsule from the detergent drawer.

Tip: Leave the detergent drawer slightly open to allow it to dry.

Final spin speed in wash programmes

When a programme is selected, the sensor control for the optimum spin speed for that programme will be brightly lit up in the control field.

A faster spin speed can be selected for certain wash programmes.

The highest selectable spin speed is indicated in the table.

Programme	rpm
ECO 40-60	1400
Cottons	1400
Minimum iron	1200
Woollens	1200
Delicates	900
Express 20	1200
Dark garments/Denim	1200
Outerwear	900
Proofing	1200
Drain/Spin	1400
Separate rinse/Starch	1200

Rinse and interim spin

There is a spin after the main wash and between the rinses. A reduction in the final spin speed will also reduce the interim spin speed. If a spin speed of less than 700 rpm is selected for the *Cottons* programme, an additional rinse is introduced.

Selecting Rinse hold (final spin)

- Touch the sensor control repeatedly until the indicator (Rinse hold) lights up.

The laundry is not spun after the final rinse cycle and remains in the rinse water. This helps to prevent creasing if the laundry is not going to be removed from the washing machine immediately after the end of the programme.

Ending a programme with a spin cycle

The indicator with the ideal spin speed lights up. You can change the spin speed with the sensor control.

- Touch the ▶II sensor control.

Ending a programme without a spin cycle

- Touch the sensor control repeatedly until the indicator (without spin) lights up.
- Touch the ▶II sensor control.

Omitting the rinse-spin and the final spin

- Touch the sensor control repeatedly until the indicator (without spin) lights up.

After the last rinse, the water will be pumped away and the anti-crease phase will switch on.

In some programmes, an extra rinse is introduced with this setting.

With Delay start you can choose when you want the programme to start. You can delay the start of the programme by 30 minutes up to a maximum of 24 hours, allowing you to make use of night-time economy electricity rates, for example.

Selecting the Delay start function

Delay start is not possible in the *Drain/ Spin* and *Proofing* programmes.

■ Select the programme required.

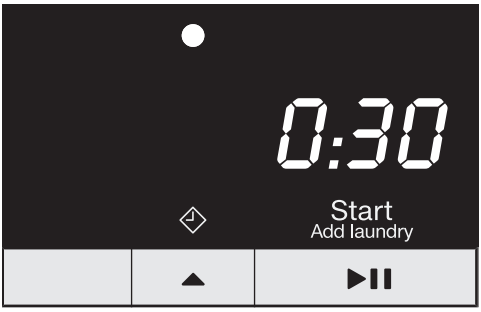

■ Touch the ▲ sensor control.

The ◇ symbol lights up brightly and the first 30 minutes of the Delay start time appear on the time display.

■ Touch the ▲ sensor control repeatedly until the required Delay start time lights up on the time display.

- In the case of settings below 3 hours, the Delay start time changes in increments of 30 minutes.
- In the case of settings above 3 hours, the Delay start time changes in increments of 1 hour.

Tip: If you press and hold the ▲ sensor control, the time automatically counts up to 24 hours.

Starting Delay start

■ Touch the ▶II sensor control.

The Delay start process starts and counts down on the time display.

Changing or cancelling a started Delay start

If the selected Delay start function has started, it is no longer possible to change the time.

■ Turn the programme selector to the ⏻ position.

■ Turn the programme selector to any programme.

Rotating bars [-] ... [-] ... [-] are shown on the time display.

The door lock is released.

■ Select a programme and a new Delay start time.

Programme chart

ECO 40-60	**Max. load 7.0 kg**
Items	For normally soiled cotton garments
Tip	A laundry load consisting of mixed cottons that are intended for washing at 40 °C or 60 °C can be washed in the same wash cycle. This programme is the most efficient in terms of energy and water consumption for washing cottons.
Note for test institutes: Test programme for compliance with EU legislation regarding ecodesign No. 2019/2023 and energy labelling in accordance with Regulation No. 2019/2014.	
Note for test institutes: For test programmes that conform to EN 60456 and the energy label to Directive 1061/2010, change the following settings: Temperatures 60 and 40 light up in the temperature display. - Touch the sensor control **once** for the 60°C Cottons test programme. Only 60 lights up on the display. - Touch the sensor control **2 times** for the 40°C Cottons test programme. Only 40 lights up on the display.	
Cottons	**Cold to 90 °C** **Max. load 7.0 kg**
Items	Cotton, linen or mixed fibre fabric, e.g. table linen, towelling, underwear, T-shirts, etc.
Tip	Where particularly high levels of hygiene are required, please select a temperature of 60 °C or higher. If you want to select a pre-wash programme, turn the programme selector to *With pre-wash*.

Minimum iron	**Cold to 60 °C**	**Max. load 3.5 kg**
Items	Synthetic and mixed fibre textiles as well as easy care cotton	
Tip	Reduce the spin speed for fabric that creases easily.	
Woollens	**Cold to 40 °C**	**Max. load 2.0 kg**
Items	Wool or wool blend fabric	
Tip	Reduce the spin speed for fabric that creases easily.	
Delicates	**Cold to 40 °C**	**Max. load 2.0 kg**
Items	Delicate garments made from synthetic fibre, mixed fibre and viscose Curtains specified as machine-washable by the manufacturer	
Tip	- Dust in curtains usually means that a programme with Pre-wash is advisable. - Deselect the spin for items which crease easily.	
Express 20	**Cold to 40 °C**	**Max. load 3.5 kg**
Items	Cotton garments that have hardly been worn or are only very lightly soiled	
Tip	The *Short* extra option is activated automatically.	
Dark garments/ Denim	**Cold to 60 °C**	**Max. load 3.0 kg**
Items	Black and dark items made of cotton, mixed fibre or denim	
Tip	- Wash inside out. - Denim often contains excess dye and may run during the first few washes. Therefore, wash light and coloured items separately.	

Programme chart

Outerwear	**Cold to 40 °C**	**Max. load 2.5 kg**
Items	Performance outerwear (e.g. jackets and trousers) made from membrane fabric such as Gore-Tex®, SYMPATEX®, WINDSTOPPER®, etc.	
Tip	- Zip up or close any jackets with Velcro before washing. - Do not use fabric conditioner. - If required, these items can also be re-proofed using the *Proofing* programme. Proofing after each wash cycle is not recommended.	
Proofing	**40 °C**	**Max. load 2.5 kg**
Items	Treating microfibre fabric, ski wear or table linen made from mainly synthetic fibres to provide a finish which is resistant to water and dirt	
Tip	- The items must be freshly laundered and spun or dried before proofing. - For best results, the items should be heat-treated afterwards. This can be achieved by drying them in the tumble dryer or ironing them.	
Drain/Spin		**–**
Tip	- Drain only: Set spin speed to ⌀. - Make sure you select the appropriate spin speed.	
Separate rinse/Starch		**Max. load 7.0 kg**
Items	- Rinsing hand-washed items - Table cloths, serviettes and workwear requiring starching	
Tip	- Reduce the final spin speed for fabric that creases easily. - Laundry that is to be starched should be washed but not treated with fabric conditioner. - Items will be rinsed very effectively with 2 rinses by activating the *Water* + extra option.	

You can use the extra options buttons to augment the wash programmes.

Use the ⁾≡ sensor control to select or deselect extra options.

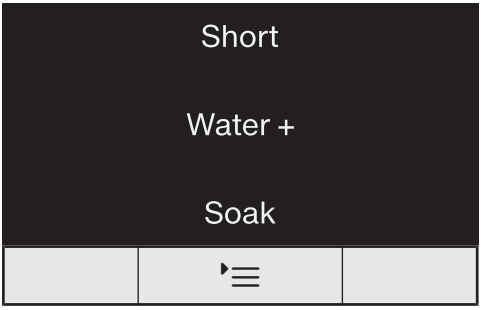

■ Touch the ⁾≡ sensor control:

- **Once**: the *Short* extra option is selected and lights up.
- **2 times**: the *Water* + extra option is selected and lights up.
- **3 times**: the *Soak* extra option is selected and lights up.
- **4 times**: the *Short* and *Water* + extra options are selected and light up.
- **5 times**: the *Water* + and *Soak* extra options are selected and light up.
- **6 times**: all the extra options are switched off.

Short

For textiles with light soiling with no visible staining.

The wash duration is reduced.

Water +

The water level in the main wash and the rinses will be increased. A second rinse cycle is carried out in the *Separate rinse*/*Starch* programme.

You can select other functions for the *Water* + sensor control. These are described under “Programmable functions”.

Soak

For cleaning heavily soiled and stained items with protein stains.

- A duration of between 30 minutes and 2 hours can be programmed in 30 minute increments for the soak process.
- The factory default setting is 30 minutes.

See “Programmable functions – Soak” for instructions on how to programme a different soak period.

Pre-wash

For laundry with large amounts of dirt, e.g. dust and sand.

Extra options

The following extras can be selected in addition to the programmes

	Short	Water +	Soak	Pre-wash
ECO 40-60	–	–	–	–
Cottons	●	●	●	●
Minimum iron	●	●	●	–
Woollens	–	–	–	–
Delicates	●	●	●	–
Express 20	✓	–	–	–
Dark garments/Denim	●	●	●	–
Outerwear	●	●	●	–
Proofing	–	–	–	–
Separate rinse/Starch	–	●	–	–

● = can be selected

✓ = activated automatically

– = cannot be selected

Washing	
The figure quoted in the bucket is the maximum temperature at which the garment can be washed.	
	Normal agitation
	Reduced agitation
	Much reduced agitation
	Hand wash
	Do not wash

Programme selection examples

Programme	Care label symbols
ECO 40-60	
Cottons	
Minimum iron	
Delicates	
Woollens	
Express 20	

Drying	
	Normal temperature
	Low temperature
	Do not tumble dry

Ironing	
	Approx. 200 °C
	Approx. 150 °C
	Approx. 110 °C Ironing with steam can cause irreversible damage.
	Ironing/rotary ironing prohibited

Professional cleaning	
 	Dry clean only. The letters indicate the type of cleaning agent required.
	Wet cleaning
	Dry cleaning prohibited

Bleaching	
	Any oxidation bleach can be used
	Use oxygen bleach only
	Do not bleach

Programme sequence

	Main wash		Rinse		Spin
	Water level	Wash rhythm	Water level	Rinse cycles	
ECO 40-60		Ⓐ		2–3[2]	✓
Cottons		Ⓐ		2-5[1,2,3]	✓
Minimum iron		Ⓑ		2-4[2,3]	✓
Woollens		Ⓔ		2	✓
Delicates		Ⓒ		2-4[2,3]	✓
Express 20		Ⓐ		1	✓
Dark garments/Denim		Ⓑ		3-5[2,3]	✓
Outerwear		Ⓒ		3-4[3]	✓
Proofing	–	Ⓑ		1	✓
Drain/Spin	–	–	–	–	✓
Separate rinse/Starch		Ⓑ		0-1[5]	✓

Please see the next page for a description of the symbols.

= low water level

= medium water level

= high water level

Ⓐ = intensive rhythm

Ⓑ = normal rhythm

Ⓒ = sensitive rhythm

Ⓔ = handwash rhythm

✓ = carried out

– = not carried out

This washing machine has fully electronic controls with automatic load control. The washing machine takes in the right amount of water required for the programme depending on the amount of laundry and its absorbency rate.

The programme sequences outlined in the chart are based on the basic programme with a full load.

Special features in the programme sequence

Anti-crease:
At the end of the programme, the drum continues to turn at intervals for up to 30 minutes to help prevent creasing.
Exception: there is no anti-crease phase in the *Woollens* programme.
The washing machine can be opened at any time.

[1)] If a temperature of 60 °C or higher is selected, two rinses are carried out. If a temperature of less than 60 °C is selected, three rinses are carried out.

[2] An additional rinse is carried out if:

- there is too much foam in the drum
- a spin speed lower than 700 rpm has been selected.

[3] An additional rinse is carried out if:

- the *Water* + extra option has been selected and the options *02* or *03* have been activated in Programmable functions.

[5] An additional rinse is carried out if:
the *Water* + extra option has been selected.

Changing a programme (safety lock)

A programme, temperature, spin speed or selected options cannot be changed once the machine has been successfully started. This prevents the machine being operated unintentionally, e.g. by children.

If the washing machine is switched off during active programme operation, the standby function does not switch the washing machine off completely after 15 minutes. Safety functions continue to be active because there may still be water inside the drum.

Cancelling a programme

You can cancel a wash programme at any time after it has started.

- Turn the programme selector to the ⏻ position.
- Turn the programme selector to any position.

Rotating bars ⎡¯⎤ ... ⎡_⎤ ... ⎡¯⎤ are shown on the time display.

The water is pumped away and the door lock is then released.

Selecting a new programme

- Turn the programme selector to the required wash programme.
- Check that there is still sufficient detergent in the detergent drawer. Add more detergent if necessary.
- Touch the ▶II sensor control.

The correct detergent

All detergents produced for automatic washing machines are suitable. Follow the manufacturer's instructions and dosage recommendations on the packaging.

For users in Asia:
please use a low foaming detergent suitable for use in front-loading machines

The right amount to dispense will depend on the following:

- the soiling level of the load
- the quantity of the laundry
- the water hardness level.
  Check with your local water supplier if you do not know the hardness level in your area.

Water softeners

A water softener can be used to cut down on the use of detergents in areas with water hardness levels II and III. Dispense according to the amount specified on the packaging. First add detergent and then the water softener.

You can then use the recommended amount of detergent for water hardness level I.

Water hardness levels

Hardness scale	Hardness level in mmol/l	German scale °d
I (soft)	0 – 1.5	0 – 8.4
II (medium)	1.5 – 2.5	8.4 – 14
III (hard)	above 2.5	above 14

Dispensing aids

Use dispensing aids, (e.g. balls) if these are supplied with the detergent, particularly when using liquid detergent.

Refill packs of detergent

When purchasing detergent buy refill packs wherever possible. This helps reduce the amount of waste packaging.

Fabric conditioner and liquid starch

Fabric conditioner
makes garments soft to handle and helps prevent static cling when tumble drying.

Starch
stiffens and gives body to items of laundry, e.g. shirts, tablecloths and bed linen.

Using fabric conditioner or starch separately

Prepare the starch in accordance with the manufacturer's instructions on the packaging.

Tip: When adding fabric conditioner, activate the *Water +* extra option.

- Add fabric conditioner to the ❀ compartment or insert the appropriate capsule.
- Add liquid starch to the ❀ compartment and powder or viscous starch to the compartment.
- Select the *Separate rinse*/*Starch* programme.
- Change the spin speed if necessary.
- Use the sensor control to activate the ❀ symbol if using a capsule.
- Touch the ▶II sensor control.

Colour run and dye removers/ dyes

⚠ Damage due to colour run/dye removers.
Colour run and dye removers can cause corrosion in the washing machine.
Do not use colour run or dye removers in this washing machine.

Dyes suitable for use in domestic washing machines can be used. However, please note that the salt used in the dyeing process can cause corrosion to stainless steel components in the machine if you use dye frequently. Always follow the dye manufacturer’s instructions carefully.

Recommended Miele detergents

Miele detergents have been specially designed for day-to-day use in Miele washing machines. See “Detergents and care products” for more information about these detergents.

	Miele detergents		Miele capsules		
	UltraWhite	UltraColor			
ECO 40-60	✓	✓	–	✓	✓
Cottons	✓	✓	–	✓	✓
Minimum iron	–	✓	–	✓	✓
Woollens	–	–	✓	–	–
Delicates	–	✓	✓	✓	–
Express 20	–	✓	–	✓	–
Dark garments/Denim	–	✓	✓	✓	–
Outerwear	–	–	✓	–	–
Separate rinse/Starch	–/–	–/–	–/–	✓/–	–/–

✓ Recommendation

– No recommendation

Specialist detergents (e.g. WoolCare)

Fabric care (e.g. fabric conditioner)

Additive (e.g. booster)

Detergent

Recommended detergents in accordance with Directive (EU) Nr. 1015/2010

The recommendations apply to the temperature ranges given in the Programme chart.

	Universal	Coloureds	Delicates and woollens	Specialist
	detergent			
ECO 40-60	✓	✓	–	–
Cottons	✓	✓	–	–
Minimum iron	–	✓	–	–
Woollens	–	–	✓	✓
Delicates	–	–	✓	–
Express 20	–	✓[1]	–	–
Dark garments/Denim	–	✓[1]	–	✓
Outerwear	–	–	✓	✓

✓ Recommendation

– No recommendation

[1] Liquid detergent

[2] Powder detergent

Cleaning the external casing and the control panel

⚠ Risk of electric shock!
Mains voltage is present when the washing machine is switched off
Disconnect the machine from the electricity supply before cleaning or maintenance.

⚠ Risk of damage due to ingress of water.
The pressure of a water jet can cause water to get into the washing machine, resulting in damage to components.
Do not spray the washing machine with a water jet.

- Clean the casing and control panel with a mild cleaning agent or soap and water and dry both with a soft cloth.
- The drum can be cleaned using a suitable stainless steel cleaning agent following the manufacturer's instructions on the packaging.

⚠ Damage caused by cleaning agents.
Solvent based cleaning agents, abrasive cleaners, glass cleaners or multi-purpose cleaning agents can cause damage to plastic surfaces and other parts.
Do not use any of these cleaning agents.

Cleaning the detergent dispenser drawer

Washing at low temperatures and the use of liquid detergent can lead to a build-up of mould and germs in the detergent drawer.

- For hygiene reasons, clean the entire detergent drawer at regular intervals.

Removing the dispenser drawer

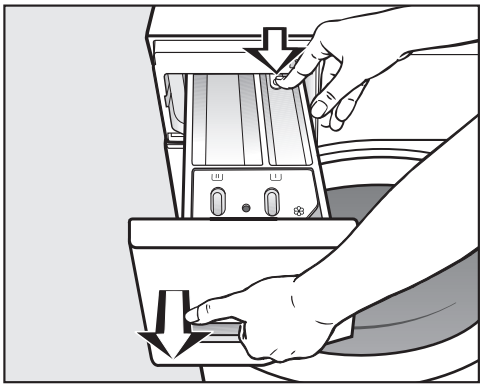

- Pull out the detergent dispenser drawer until a resistance is felt. Press down the release button and at the same time pull the drawer right out of the machine.
- Clean the detergent drawer with warm water.

Cleaning the siphon and the ❀/▭ compartment channel

Liquid starch results in clogging. If clogged, the siphon in the ❀/▭ compartment will not work and the compartment can overflow.

Clean the siphon particularly thoroughly after using liquid starch a few times.

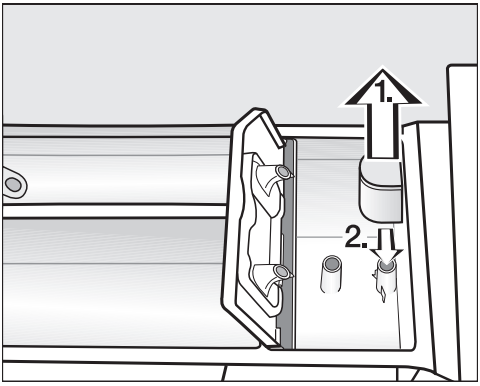

1. Remove the siphon from ❀ compartment and clean under warm running water. Clean the siphon tube in the same way.
2. Replace the siphon.

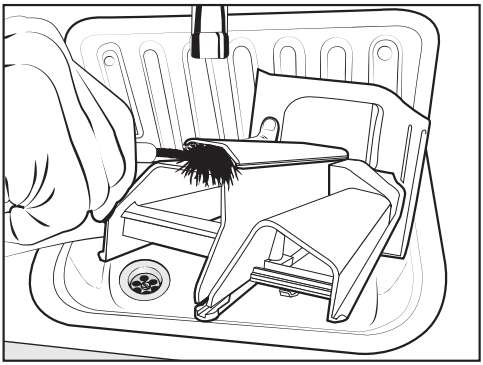

■ Clean the fabric conditioner channel using a brush and warm water.

Cleaning the detergent dispenser drawer compartment

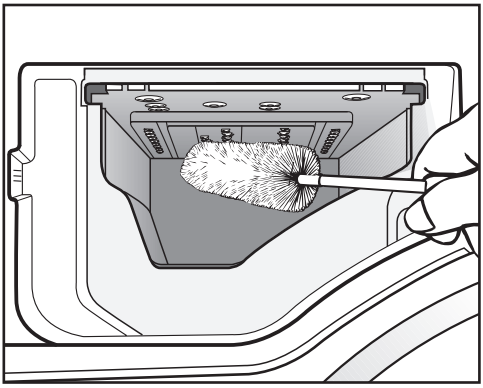

■ Use a bottle brush to remove detergent residues and limescale from the jets inside the detergent dispenser drawer compartment.

■ Refit the detergent drawer.

Tip: To assist drying, leave the detergent drawer slightly open.

Hygiene info (Cleaning the drum)

Washing at low temperatures and/or using liquid detergent can cause bacteria and unpleasant odours to build up in the washing machine. Use the *Cottons* 90 °C programme to clean the washing machine. Clean the drum at the latest when the **i** indicator light comes on.

Cleaning the water inlet filter

The washing machine has 2 filters to protect the inlet valve. Check these filters every 6 months or so. Perform this check more often if there are frequent interruptions to the external water supply.

Cleaning the filter in the inlet hose

- First turn off the stopcock.
- Unscrew the inlet hose from the stopcock.

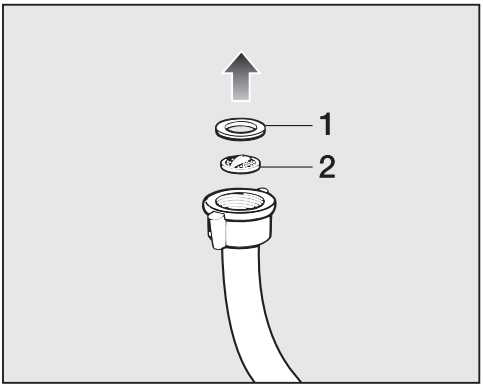

- Remove the rubber seal **1** from the recess.
- Using pointed pliers, take hold of the plastic filter slat **2** and remove the plastic filter.
- Clean the filter.
- Reassemble in reverse order.

Cleaning the filter in the inlet valve

- Using pliers, carefully loosen the ribbed plastic nut on the inlet valve and unscrew it.

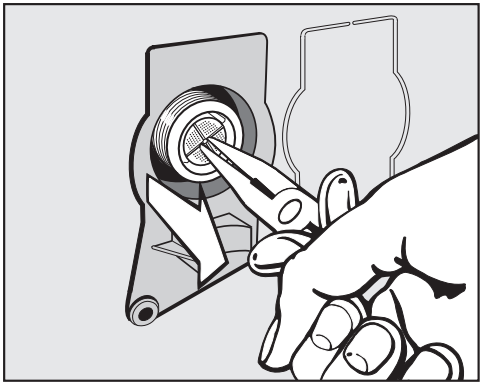

- Use pointed pliers to withdraw the plastic filter by the slat.
- Clean the filter.
- Reassemble in reverse order.

The two filters must be put back in place after cleaning.

- Screw the screw connection securely back onto the stopcock.
- Open the stopcock.

Make sure there is no water leaking from the threaded union.
Tighten the threaded union.

Problem solving guide

Many malfunctions and faults that can occur in daily operation can be easily remedied. Time and money will be saved because a service call will not be needed.

The following guide may help you to find the reason for a malfunction or a fault, and to correct it.

The programme does not start

Problem	Cause and remedy
The control panel remains dark.	There is no power to the washing machine. ■ Check whether the plug is plugged in. ■ Check whether the fuse has tripped.
	The washing machine has switched off automatically to save energy. ■ Turn the programme selector to switch the washing machine back on.
F **and** *34* **alternately appear in the time display.**	The door is not closed properly. The door lock could not engage. ■ Close the door again. ■ Start the programme again. If the fault message appears again, contact the Service Department.

The programme is cancelled and a fault indicator light lights up in the control panel

Problem	Cause and remedy
The fault indicator light lights up, F and 11 appear alternately in the time display and the buzzer sounds.	The water outlet is blocked or restricted. The drain hose has been fixed too high. ■ Clean the drain filter and the drain pump. ■ The maximum delivery head is 1 m.
The fault indicator light lights up, F and 10 appear alternately in the time display and the buzzer sounds.	The water inlet is blocked or restricted. ■ Check whether the stopcock is opened properly. ■ Check whether the inlet hose is kinked. ■ Check whether the water pressure is too low.
	The filter in the water inlet is blocked. ■ Clean the filter.
The fault indicator light lights up, F and 138 appear alternately in the time display and the buzzer sounds.	The water protection system has reacted. ■ Close the stopcock. ■ Call the Service Department.
F and XXX appear alternately on the time display and the buzzer sounds.	There is a fault. ■ Disconnect the washing machine from the electricity supply. Switch off at the wall and withdraw the plug from the socket, or disconnect the fuse. ■ Wait **at least 2 minutes** before reconnecting the washing machine to the electricity supply. ■ Switch the washing machine on again. ■ Restart the programme. If the fault message appears again, contact your Miele Dealer.

Problem solving guide

During the programme, a symbol appears in the time display

Message	Cause and remedy
-0- **lights up**	The programme selector was moved to a different position after the programme had started. ■ Turn the programme selector back to the original position.

At the end of the programme, an indicator light lights up in the control panel

Problem	Cause and remedy
The ◒ indicator light lights up.	Excessive foam has built up during washing. ■ Use less detergent next time and follow the manufacturer's instructions on dosage given on the packaging.
The i indicator light lights up and *1* appears in the time display.	When washing, a wash programme using a temperature above 60 °C has not been run for a long time. ■ Run the *Cottons* 90 °C programme using Miele machine cleaner or a multi-purpose powder detergent. This will clean the washing machine and prevent a build-up of germs and odours.

General problems with the washing machine

Problem	Cause and remedy
The washing machine smells.	The ℹ indicator light was ignored. When washing, a wash programme using a temperature above 60 °C has not been run for a long time. ■ In order to prevent bacteria and unpleasant odours building up in the washing machine, run the *Cottons* 90 °C programme using Miele machine cleaner or a universal powder detergent.
	The door and the detergent drawer were closed after washing. ■ Leave the door and the detergent drawer slightly open to allow them to dry.
The machine shakes during the spin cycle.	The machine feet are not level. ■ Level the machine and adjust the feet correctly.
The laundry has not been spun properly and is still wet.	The machine detected an imbalance during the final spin cycle and reduced the spin speed automatically. ■ Include both large and small items in the load as this will give better distribution during spinning.
Strange pump noises can be heard.	This is not a fault. These slurping noises occur at the end of the pump sequence as a normal part of operation.
Large amounts of detergent residue remain in the detergent dispenser drawer.	The water pressure is too low. ■ Clean the water inlet filter. ■ It may be useful to select the *Water* + extra option.
	Powder detergent used in conjunction with water softeners tends to become sticky. ■ In future, add washing powder into the dispenser drawer first, and then add the water softener.

Problem solving guide

General problems with the washing machine

Problem	Cause and remedy
Fabric conditioner is not completely dispensed or too much water remains in the ❀ compartment.	The siphon tube is not correctly positioned or is clogged. ■ Clean the siphon, see “Cleaning and care - Cleaning the detergent dispenser drawer”.
At the end of the programme there is still liquid in the capsule.	The small pipe in the detergent dispenser drawer onto which the capsule is placed is blocked. ■ Clean the small pipe.
	This is not a fault. For technical reasons a small amount of water will remain in the capsule.
There is water next to the capsule in the ❀ compartment.	CapDosing has not been activated. ■ Make sure that you remember to activate CapDosing with the ⌒ sensor control the next time you insert a capsule.
	An empty capsule was not removed at the end of the last wash programme. ■ Remove and dispose of the empty capsule at the end of each programme.
	There is a blockage in the small pipe in the detergent drawer onto which the capsule is placed. ■ Clean the small pipe.

An unsatisfactory wash result

Problem	Cause and remedy
Liquid detergent does not give the required result.	Liquid detergents usually contain no bleaching agents. They do not remove fruit, coffee and tea stains. ■ Use a general purpose powder detergent containing a bleaching agent. ■ Use the appropriate capsule or add stain removers to the II compartment. ■ Never put stain removers and liquid detergent together in the dispenser drawer.
Grey, greasy particles cling to washed laundry.	Insufficient amounts of detergent were used to break down the particles of grease in heavily soiled laundry. ■ Use more detergent. ■ Before washing the next load run a Cottons 60°C programme with powder detergent but without a load.
White residues which look like powder detergent are seen on dark textiles after washing.	The detergent contained compounds (zeolites) to aid water softening which are not soluble in water. These have ended up on the laundry. ■ Try and brush off the residues with a soft brush once the laundry is dry. ■ Wash dark textiles using a detergent which contains no zeolites. Liquid detergents usually contain no zeolites. ■ Use the *Dark garments*/*Denim* programme for dark coloured laundry.

Problem solving guide

The door will not open

Problem	Cause and remedy
The door cannot be pulled open during a programme.	The drum is locked during a programme. ■ Follow the description in “5. Starting a programme – Adding or removing laundry”.
After the programme is cancelled, flashing bars ...... appear in the time display.	For safety reasons the drum door cannot be opened if the suds temperature is higher than 55 °C. ■ Wait until the temperature in the drum has decreased and the bars have stopped flashing in the display.
F and 35 alternately appear in the time display.	The door lock has jammed. ■ Call the Service Department.

Opening the door in the event of a blocked drain outlet and/ or power cut

■ Switch off the washing machine.

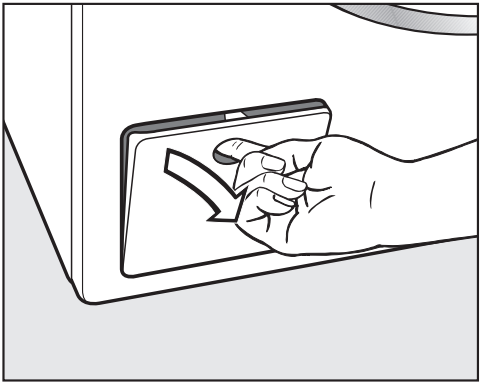

■ Open the access panel for the drain pump.

Blocked drain outlet

If the drain outlet is blocked, there may be a large quantity of water left behind in the washing machine.

⚠ Risk of scalding due to hot suds.
Escaping suds will be hot if laundry has been washed at high temperatures!
Carefully allow all suds to drain off.

Draining the washing machine

Remove the drain filter, though not completely.

■ Place a suitable container under the access panel, e.g. a universal oven tray.

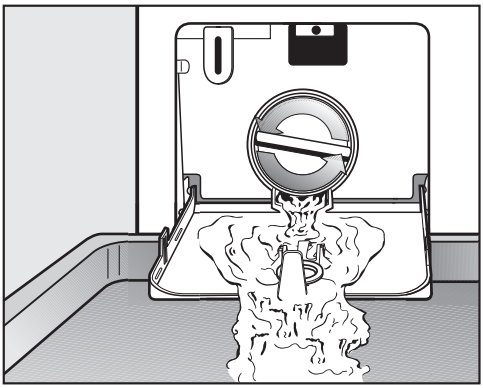

■ Slowly unscrew the drain filter to let the water out.

■ Tighten the drain filter back up again if you need to interrupt the flow of water.

Once the flow of water ceases:

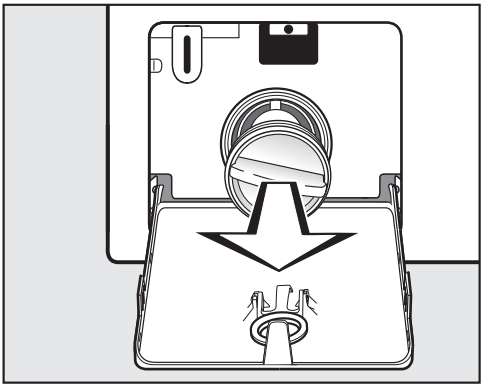

■ Remove the drain filter completely.

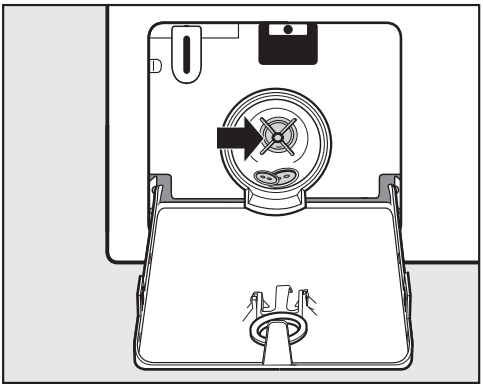

- Clean the drain filter thoroughly.
- Remove any foreign objects (e.g., buttons, coins etc.) and clean the interior. Turn the impellers by hand to check that they rotate freely.
- Replace the drain filter correctly and tighten it securely.
- Close the drain pump access panel.

⚠ Risk of water damage.
Make sure the drain filter is securely tightened. Otherwise there is a risk of water leakage during use.
Replace the drain filter correctly and tighten it securely.

Open the door

⚠ Danger of injury due to rotating drum!
Reaching into a moving drum is extremely dangerous.
Always make sure that the drum is stationary before reaching in to remove laundry.

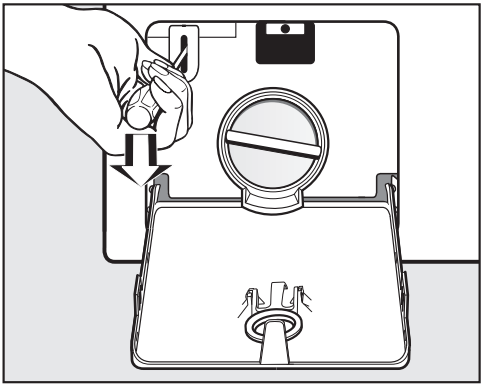

- Use a screwdriver to unlock the door.
- Pull open the door.

Contact in the event of a fault

In the event of any faults which you cannot remedy yourself, please contact your Miele dealer or the Miele Customer Service Department.

You can book a Miele Customer Service Department call-out online at www.miele.com/service.

Contact information for the Miele Customer Service Department can be found at the end of this document.

Please quote the model identifier and serial number of your appliance (Fabr./ SN/Nr.) when contacting the Miele Customer Service Department. This information can be found on the data plate.

Please note that telephone calls may be monitored and recorded for training purposes and that a call-out charge will be applied to service visits where the problem could have been resolved as described in this booklet.

The data plate is found above the porthole glass when the door is opened.

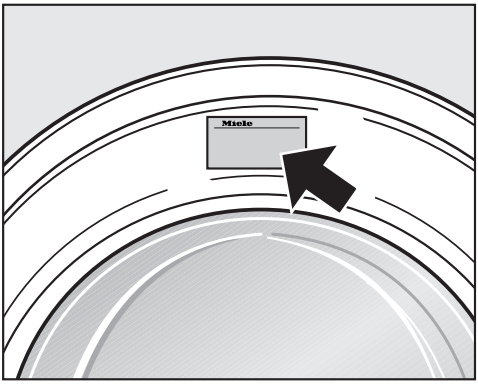

Optional accessories

Optional spare parts and accessories for this washing machine are available from your Miele Dealer, the Miele Spare Parts Department or via the internet at www.miele.co.uk.

Please note that telephone calls may be monitored and recorded for training purposes.

Guarantee

For information on the appliance guarantee specific to your country please contact Miele. See end of this booklet for contact details.

Front view

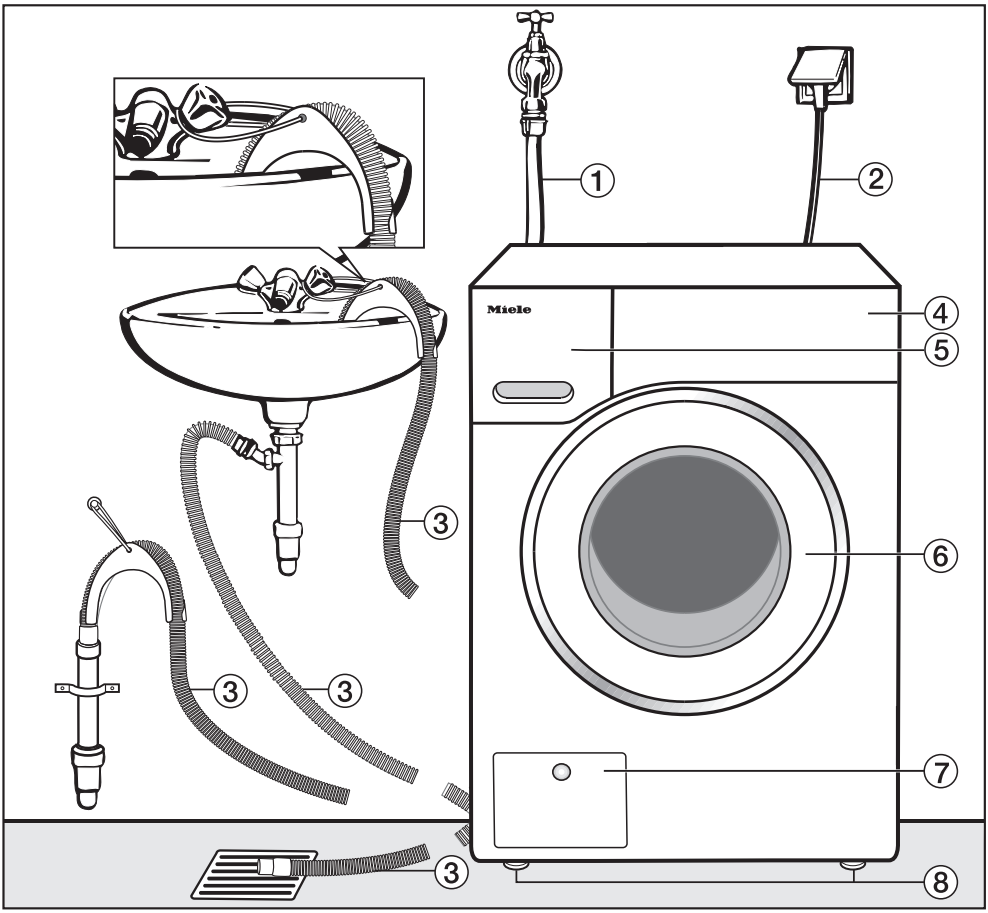

① Water inlet hose (pressure tested to 7000 kPa)

② Mains connection cable

③ Flexible drain hose (with detachable swivel elbow)

④ Control panel

⑤ Detergent dispenser drawer

⑥ Door

⑦ Access to drain filters, drain pumps and emergency release

⑧ Four height-adjustable feet

Rear view

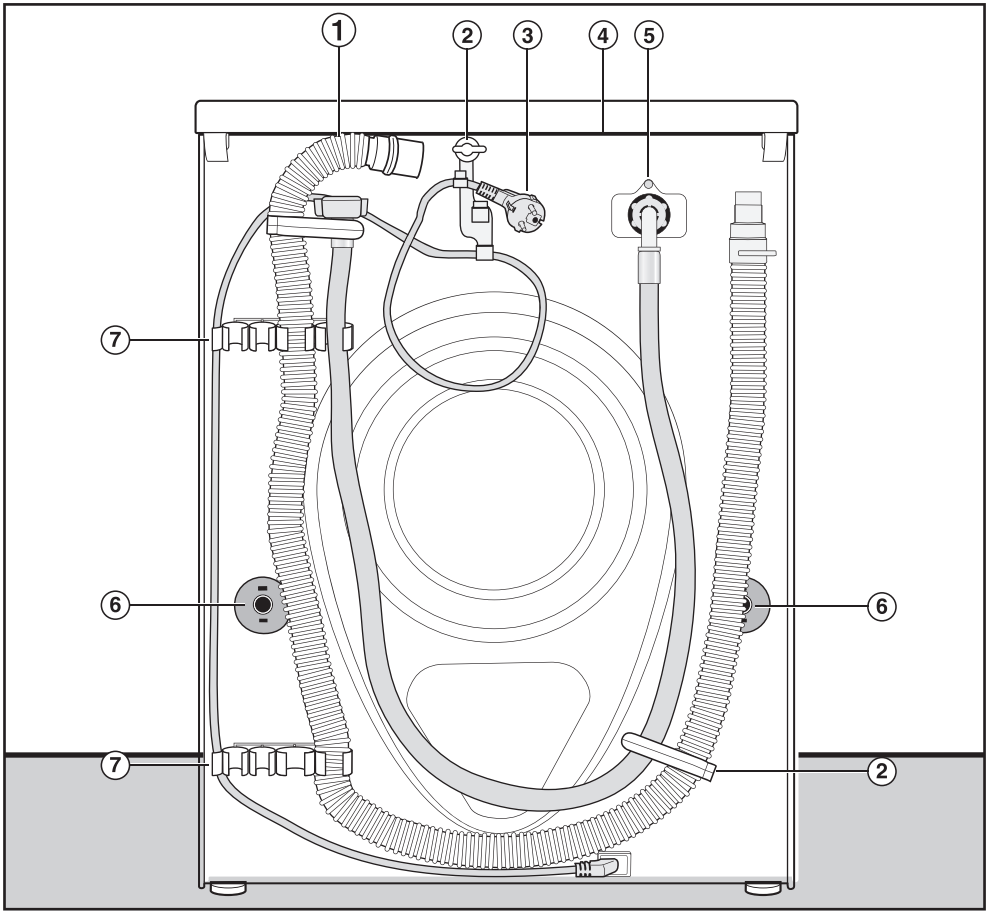

① Drain hose

② Transport clips for inlet and drain hoses and mains connection cable

③ Mains connection cable

④ Protruding lid for holding when moving the machine

⑤ Water inlet hose (pressure tested to 7000 kPa)

⑥ Safety caps for transit bars

⑦ Transport clips for inlet and drain hoses and for storing transit bars when not in use

Installation surface

A concrete floor is the most suitable installation surface. It is far less prone to vibration during the spin cycle than wooden floorboards or a carpeted surface.

Please note:

- The machine must be level and securely positioned.
- To avoid vibrations during spinning, the machine should not be installed on soft floor coverings.

If installing on a wooden joist floor:

- Install the machine on a plywood base (at least 59 x 52 x 3 cm). The base should span several joists and be bolted to the joists and not only to the floorboards. Check for the presence of pipes and cables first.

Tip: If possible, install the machine in a corner. This is usually the most stable part of the floor.

⚠ Injury can occur if the washing machine has not been adequately secured.

During installation, the washing machine must be secured on a plinth to be made available on site (concrete or brick), in order to ensure it cannot fall or slip.

Secure the washing machine using a clamp/fastening bracket (MTS floor mounting kit – available from your Miele dealer or Miele spare parts department).

Transporting the washing machine to its installation site

⚠ Danger of injury due to unsecure lid.

Make sure the fixings at the back of the lid are secure. Otherwise there is a danger of the lid being pulled off when carrying the machine.

Before carrying the machine check that the lid is secure where it protrudes at the back of the machine.

- Carry the washing machine by the front feet and by the lid where it protrudes at the back of the appliance.

Removing the transit bars

Removing the left-hand transit bar

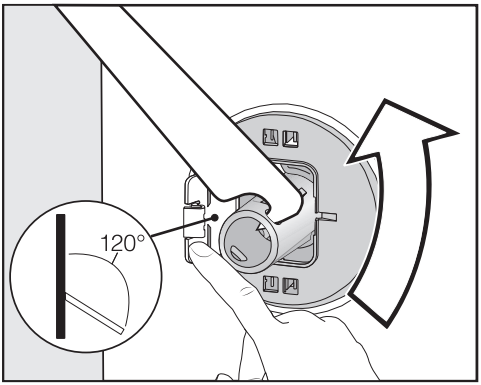

- Push the cover out and turn the left-hand transit bar 90° using the spanner supplied.

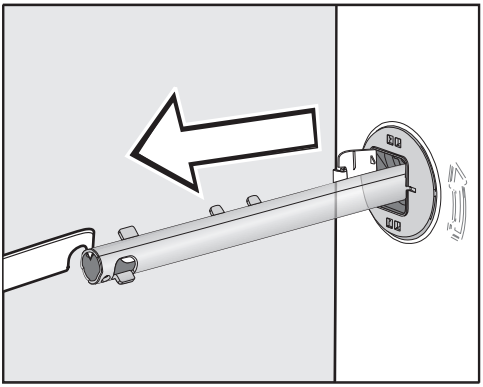

- Withdraw the transit bar.

Removing the right-hand transit bar

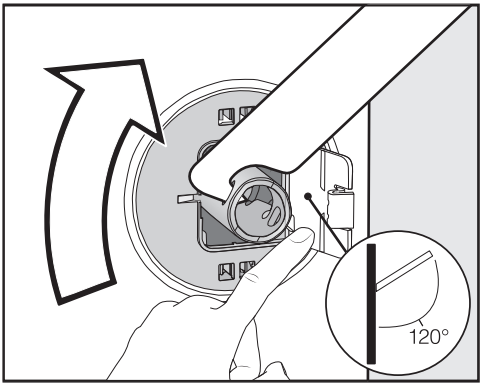

- Push the cover out and turn the left-hand transit bar 90° using the spanner supplied.

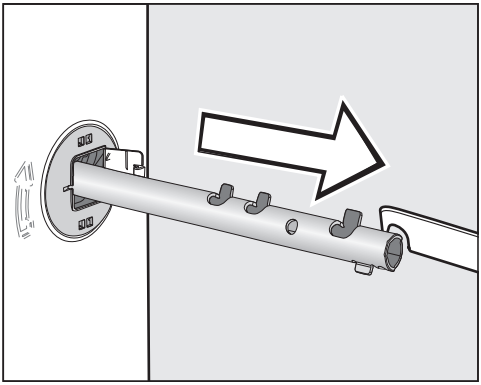

- Withdraw the transit bar.

Covering holes

⚠ Risk of injury from sharp edges.
There is a risk of injury from reaching into holes that are not covered.
Cover the holes for the transit bars after they have been removed.

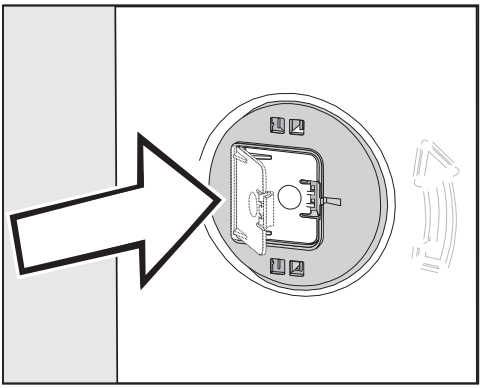

- Push the covers in firmly until they engage in position.

Securing the transit bars

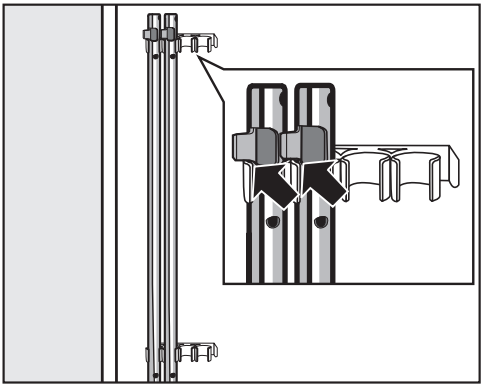

- Secure the transit bars to the back of the washing machine. Make sure that the top catch is located above the holder.

⚠ Risk of damage from incorrect transport.
The washing machine may become damaged if moved without the transit bars in place.
Keep the transit bars in a safe place. Fit them again if the machine is to be moved (e.g. when moving house).

Fitting the transit bars

Opening the covers

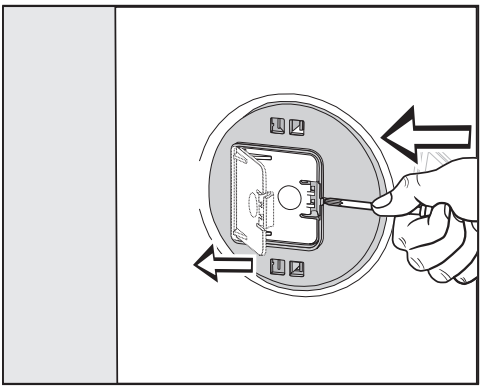

- Press against the retainer with a sharp object (a narrow screwdriver, for example).

The cover opens.

Fitting the transit bars

- To fit the bars, follow the instructions for removing them in reverse order.

Tip: The bars will slide in more easily if you lift the drum slightly.

Levelling the machine

The washing machine must stand perfectly level on all four feet to ensure safe and proper operation.

Incorrect installation may increase electricity and water consumption and may cause the machine to move about.

Screwing out and adjusting the feet

The four adjustable screw feet are used for levelling the washing machine. The machine is supplied with all four feet are screwed in.

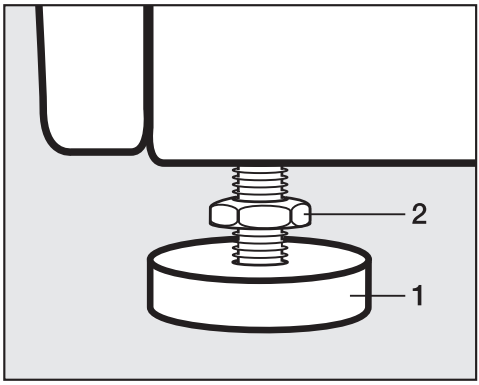

- Using the spanner supplied, turn counter nut **2** in a clockwise direction. Then turn counter nut **2** together with foot **1** to unscrew.

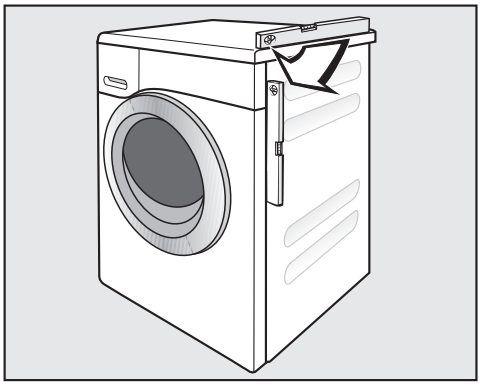

- Use a level to check that the washing machine is standing level.
- Hold foot **1** securely with a pipe wrench. Turn counter nut **2** again using the spanner supplied until it sits firmly up against the housing.

⚠ Risk of damage due to incorrectly aligned washing machine.

There is a danger of the washing machine moving about if the feet are not secured.

Turn all four counter nuts for the feet until they sit firmly up against the housing. Please also check this for the feet which did not need adjustment.

Installing under a continuous worktop

⚠ Risk of electric shock due to exposed cables

There is a risk of coming into contact with live parts while the lid is removed.

Building under kits* must only be installed/dismantled by a suitably qualified fitter in accordance with the instructions supplied.

- A special **building under kit*** is required. The cover plate supplied with the building under kit is used to replace the machine lid. It is necessary to fit the coverplate for electrical safety reasons.
- Connections for electricity, water and drainage should be installed in such a way that they remain accessible when the machine is in its final position.

Fitting instructions are supplied with the building-under kit.

Washer-dryer stack

The washing machine can be combined with a Miele tumble dryer in a washer-dryer stack. The appropriate “WTV” stacking kit* to match your dryer is required.

All parts marked* are available from your Dealer or Miele.

Please note:

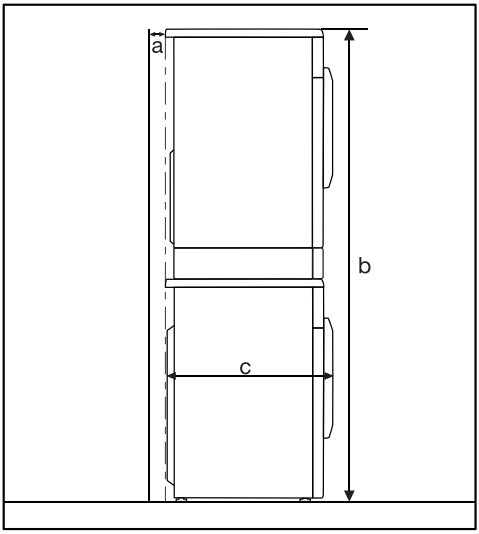

a = at least 2 cm

b = WTV without drawer: 172 cm
WTV with drawer: 181 cm

c = 64 cm

The water protection system

The Miele water protection system protects all parts of the washing machine from water damage.

The system consists of three main components:

- the inlet hose
- the electronic unit and drainage and overflow protection
- the drain hose

Inlet hose

- Protection against bursting

  The inlet hose is tested to withstand pressure of at least 7,000 kPa.

Electronic module and housing

- Floor tray: any leaking water from the washing machine is collected in the floor tray. There is a float switch to close the water intake valve. The water inlet is shut off and any water inside the suds container is drained away.
- Leak protection: any leaking water that is not collected in the floor tray is detected. The water inlet is shut off and any water inside the suds container is drained away.
- Overflow protection: this prevents the washing machine from taking in too much water and overflowing. If the water level exceeds a certain level, the drain pump switches on and pumps the excess water away.

Drain hose

The drain hose is protected by a ventilation system which prevents the washing machine from being emptied completely.

Connection to the water supply

Connecting the water inlet

⚠ Health risk and risk of damage due to contaminated incoming water.

The quality of the incoming water must correspond to the drinking water specification of the country in which the washing machine is being operated.

Always connect the washing machine to the mains water supply.

The water connection pressure needs to be between 100 and 1000 kPa. If the water connection pressure exceeds 1000 kPa, a pressure reducing valve must be installed.

A stopcock with a ¾ inch threaded union is required for the connection. If this is not available, only a qualified installer may connect the washing machine to the mains water supply.

The screw thread is subject to water connection pressure.

Check the connection for leaks. Slowly open the stopcock. Correct the position of the seal and screw thread if necessary.

The washing machine is not suitable for connection to a hot water supply.

The washing machine must not be connected to a hot water supply.

Maintenance

Only use a genuine Miele hose that has been pressure tested to withstand at least 7,000 kPa should you ever need a replacement.

⚠ Damage caused by dirty water.

A filter is located in the open end of the inlet hose and another in the intake point to protect the inlet valve in the washing machine.

These filters must not be removed.

Hose extension

Longer hoses 2.5 or 4.0 m in length are available from your Miele Dealer or Miele as optional extras.

Water drainage

The suds are drained through a drain pump with a 1 m high delivery head. For the water to drain freely, the hose must be free of kinks.
If required, the hose can be extended to a length of up to 5 m. Accessories are available from your Miele dealer or from the Miele Customer Service Department.

For drain heights of more than 1 m (up to a maximum delivery head of 1.8 m), a replacement drain pump will need to be fitted. Please contact Miele for advice. For a drain height of 1.8 m, the hose can be extended to a length of up to 2.5 m. Accessories are available from your Miele dealer or from the Miele Customer Service Department.

Drainage options:

1. Directed into a sink or basin:

   Please note:

   – Hook the hose over the edge and secure it.

   – If the water is pumped into a washbasin, make sure that it can drain away freely. Otherwise there is a risk of water overflowing or of some of the drained water being sucked back into the machine.

2. Connected securely to a plastic drain pipe with a rubber nipple (there is no need to use a siphon).

3. Connected securely to a floor drain (gully).

4. Connected securely to a washbasin with plastic nipple.

Fitting the elbow

Use the elbow supplied to stop the drain hose from slipping.

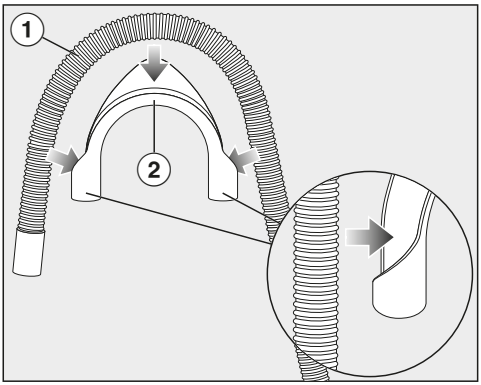

■ Attach the elbow ② to the drain hose ①.

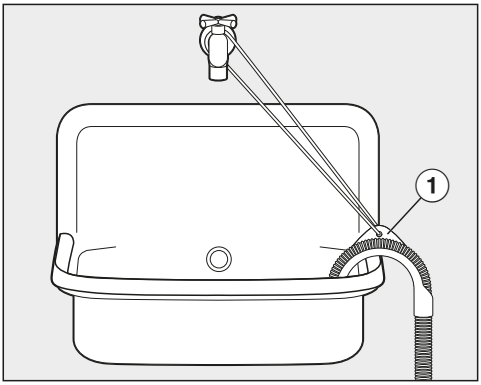

■ Place the end of the drain hose in a sink.

■ Use a strap and the eye ① to stop the elbow from slipping.

Direct connection to a sink drain outlet

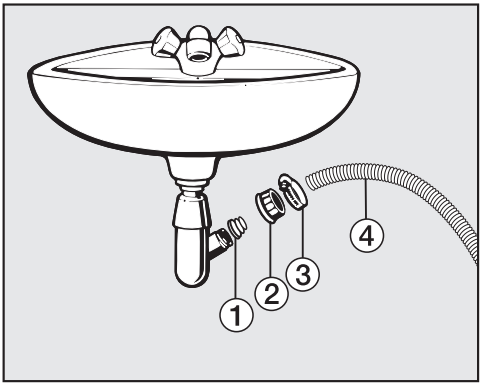

① Adapter

② Spigot nut

③ Hose clip

④ End of the hose

- Fit adapter ① to the sink drain outlet using nut ②.
- Attach the end of hose ④ to adapter ①.
- Use a screwdriver to tighten hose clip ③ up close to the nut.

Electrical connection

The washing machine is supplied with an electrical connection cable with moulded plug ready for connection to a switched socket.

The socket must be easily accessible after the washing machine has been installed. If that is not possible, ensure that a suitable means of disconnection is provided on the installation side for each pole.

⚠ Risk of fire from overheating.
Connecting the washing machine to a multi-socket plug adapter or to an extension lead can overload the cable.
Do not use an extension lead or multi-socket plug adapter.

The electrical system must comply with local and national safety regulations (BS 7671 in the UK). We recommend the use of a suitable RCD ⎓.

If the connection cable is damaged, it must only be replaced with a specific connection cable of the same type (available from the Miele Customer Service Department). For safety reasons, such replacement may only be carried out by a qualified technician or the Miele Customer Service Department.

The data plate indicates the nominal power consumption and the appropriate fuse rating. Compare the specifications on the data plate with those of the electricity supply and make sure that they match.

If in any doubt, consult a qualified electrician.

Temporary or permanent operation on an autonomous power supply system or a power supply system that is not synchronised with the mains power supply (e.g. island networks, back-up systems) is possible. A prerequisite for operation is that the power supply system complies with the specifications of EN 50160 or an equivalent standard. The function and operation of the protective measures provided in the domestic electrical installation and in this Miele product must also be maintained in isolated operation or in operation that is not synchronised with the mains power supply, or these measures must be replaced by equivalent measures in the installation. As described, for example, in the current version of BS OHSAS 18001–2 ISO 45001.

		Load	Energy	Water	Duration	Residual moisture
	°C	kg	kWh	Litres	h:min	%
ECO 40-60		7.0	0.70	55	3:41	51
Cottons	60 °C	7.0	1.20	55	2:31	53
	60°C*	7.0	0.90	40	2:59	53
	20 °C	7.0	0.35	72	2:41	53
Minimum iron	30 °C	3.5	0.35	50	2:01	30
Express 20[1)]	40 °C	3.5	0.34	30	0:20	–
Woollens	30 °C	2.0	0.23	38	0:40	–

1 *Short* extra activated

Consumption data can vary from the nominal values given depending on water pressure, water hardness, water inlet temperature, room temperature, type and volume of load, fluctuations in the electricity supply and any extras selected.

Note for test institutes

*Test programme in accordance with IEC 60456 or EN 60456.

Selecting test programmes

Test programmes that conform to EN 60456 and the energy label to Directive 1061/2010 can be selected via the *ECO 40-60* programme.

■ Turn the programme selector to the *ECO 40-60* programme.

Temperatures 60 and 40 light up in the temperature display.

■ Touch the sensor control **once**.

Only 60 lights up on the display. The 60°C Cottons test programme is selected.

Technical data

Height	850 mm
Width	596 mm
Depth	636 mm
Depth with door open	1054 mm
Height for building under	820 (+8/-2) mm
Width for building under	600 mm
Depth for building under	600 mm
Weight	Approx. 85 kg
Capacity	7.0 kg dry laundry
Supply voltage	See data plate
Rated load	See data plate
Fuse rating	See data plate
Consumption data	See “Consumption data”
Minimum water flow pressure	100 kPa (1 bar)
Maximum water flow pressure	1000 kPa (10 bar)
Water inlet hose length	1.60 m
Drain hose length	1.50 m
Connection cable length	2.00 m
Maximum delivery head	1.00 m
Maximum drainage length	5.00 m
LEDs	Class 1
Test certifications awarded	See data plate
Power rating in off mode	0.30 W

The programmable functions are used to alter the washing machine's electronics to suit changing requirements. Programmable functions can be altered at any time.

Opening the programming level

Programming is carried out in 8 steps (❶, ❷, ❸ ... ❽) using the sensor controls.

Prerequisites:

- The washing machine is switched on (the programme selector is pointing to a wash programme).
- The washing machine door is open.

❶ Touch the ▶II sensor control and hold it down whilst carrying out steps ❷ and ❸.

❷ Close the washing machine door.

Wait until *Start/Add laundry* lights up constantly ...

❸ ... and then release the ▶II sensor control.

P13 will light up in the time display.

Choosing and selecting a programmable function

The number of the programmable function will appear in the time display as *P* and a number: e.g. *P13*.

❹ Touch the ▲ sensor control to select the other programmable functions one by one:

Programmable functions	
P13	Keypad tone
P14	PIN code
P22	Indicator switch-off behaviour
P24	Memory
P26	Additional long pre-wash – Cottons
P27	Soak duration
P28	Gentle action
P29	Reduced temperature
P30	Water plus
P31	Water plus level
P32	Maximum rinse level
P33	Suds cooling
P34	Anti-crease
P49	Low water pressure

■ Confirm the selected programmable function by touching the ▶II sensor control.

Editing and saving a programmable function

You can either switch a programmable function on/off or select different options.

❻ Touch the ▲ sensor control to switch the programmable function on/off or to select an option:

Programmable function	Available options				
	-00	-01	-02	-03	-04
P13	●	✓			
P14	✓	●			
P22	✓	●			
P24	✓	●			
P26	✓	●	●	●	
P27		✓	●	●	●
P28	✓	●			
P29	✓	●			
P30		✓	●	●	
P31		✓	●	●	●
P32	✓	●			
P33	✓	●			
P34	●	✓			
P49	✓	●			

● = Can be selected

✓ = Factory default setting

❼ Touch the ▶II sensor control to confirm your selection.

The number of the programmable function, e.g. *P13*, will then light up again.

Exit programming level

❽ Turn the programme selector to ⏻.

The option you have selected is now stored in memory. You can change it again at any time.

P13 Keypad tone

Each touch of a sensor is confirmed with an audible tone.

Options

-00 = Keypad tone switched off

-01 = Keypad tone switched on **(factory default setting)**

P14 Lock code

The lock code prevents the washing machine being used without your knowledge.

When the code has been activated, you have to enter a code after switching the washing machine on. Otherwise the washing machine cannot be operated.

Options

-00 = Lock code switched off **(factory default setting)**

-01 = Lock code is switched on

Using the washing machine with a PIN code

The code is **125** and cannot be altered.

■ Switch on the washing machine.

The time display shows 0_ _ and 0 flashes to prompt you to enter the code.

■ Touch the ▲ sensor control.

1 _ _ appears on the time display.

■ Confirm the number with the ▶II sensor control.

The first number has been saved and you can now enter the second number using the ▲ sensor control.

■ Enter the second and third numbers and confirm the numbers with the ▶II sensor control.

The lock function is deactivated. A wash programme can now be selected and started.

P22 Indicator switch-off behaviour

The indicators will switch off after 10 minutes to save energy.

Options

-00 = Off **(factory default setting)**
The indicators will remain lit up while the washing machine is switched on.

-01 = On
The indicators will switch off after 10 minutes if the programme is started.

However, the indicators will remain lit up for 10 minutes after a Delay start time has elapsed, after the end of a programme or at the end of the anti-crease phase.

P24 Memory

The washing machine will save the last settings (temperature, spin speed and some of the extras) selected for a programme after the programme has started.

When this programme is chosen again, these saved settings will appear in the display.

Options

-00 = Memory is switched off **(factory default setting)**

-01 = Memory is switched on

P26 Longer pre-wash Cottons

If you require a longer pre-wash you can extend the pre-wash time.

Options

-00 = No increase in the pre-wash time **(factory default setting)**

-01 = + 6 minutes increase in the pre-wash time

-02 = + 9 minutes increase in the pre-wash time

-03 = + 12 minutes increase in the pre-wash time

P27 Soak duration

You can set a duration for the soak process of between 30 minutes and two hours.

You can select the duration in 30 minute increments. When the *Soak* Extra option is selected the laundry will be soaked for the duration selected.

Options

-01 = **30 minutes** soak duration **(factory default setting)**

-02 = **1 hour** soak duration

-03 = **1 hour 30 minutes** soak duration

-04 = **2 hours** soak duration

P28 Gentle action

Activating gentle action reduces the drum action and is suitable for washing lightly soiled items more gently.

Gentle action can be activated for the *Cottons* and *Minimum iron* programmes.

Options

-00 = Gentle action is switched off **(factory default setting)**

-01 = Gentle action rhythm is switched on

P29 Reduce temperature

The boiling point for water is lower at high altitudes. In order to avoid water boiling, Miele recommend activating the reduce temperature setting at altitudes of more than 2000 m above sea level. The maximum temperature is reduced to 80 °C even when a higher temperature is selected.

Options

- -00 = The reduce temperature setting is switched off **(factory default setting)**
- -01 = The reduce temperature setting is turned on

P30 Water plus

You can determine the amount of water used if the *Water* + extra is selected.

Selection

- -01 = More water is used in the wash and rinse stages **(factory default setting)**
- -02 = An extra rinse is carried out
- -03 = The water level in the wash and rinse stages is increased and an extra rinse is carried out

P31 Water plus level

There are three different water levels which can be selected by activating the *Water* + extra.

Options

- -01 = No higher water level **(factory default setting)**
- -02 = Water level increase by 1 level when washing and rinsing
- -03 = Water level increase by 2 levels when washing and rinsing
- -04 = Water level increase by 3 levels when washing and rinsing

P32 Maximum rinse level

The water level in the rinse cycle can be permanently set to the highest value.

This function is useful for allergy sufferers as it achieves an excellent rinse result. Water consumption will increase.

Options

- -00 = Maximum rinse level is switched off **(factory default setting)**
- -01 = Maximum rinse level is switched on

P33 Suds cooling

When this is activated, additional water flows into the drum at the end of the main wash to cool the suds down. Hot suds can damage plastic drainage pipes.

Suds cooling takes place when a temperature of 70 °C or higher is selected for the Cottons programme.

Suds cooling should be activated:

- to prevent the danger of scalding if the drain hose is hooked over the edge of a sink or basin.
- where drainage pipes do not comply with DIN 1986.

Options

-00 = Suds cooling is switched off **(factory default setting)**

-01 = Suds cooling is switched on

P34 Anti-crease

The anti-crease function helps prevent creasing if laundry is not going to be removed immediately after the end of the programme.

The drum continues to turn at intervals for up to 30 minutes at the end of the programme. The door can be opened at any time.

Options

-00 = The anti-crease function is switched off

-01 = The anti-crease function is switched on **(factory default setting)**

P49 Low water pressure

If the water pressure is below 100 kPa (1 bar), the washing machine cancels the programme and the fault message appears.

If the water pressure cannot be increased, activating this function will prevent the programme from being cancelled.

Options

-00 = Low water pressure is switched off **(factory default setting)**

-01 = Low water pressure is switched on

Detergent, fabric care products, additives and machine care products are available for this washing machine. All products have been designed for Miele washing machines.

These and many other products can be ordered from www.shop.miele.com, the Miele Customer Service Department or your Miele dealer.

Detergent

UltraWhite (powder detergent)

- Best results at 20/30/40/60/95 °C
- Radiant white laundry thanks to powerful formula with active oxygen
- Excellent stain removal even at low temperatures

UltraColor (liquid detergent)

- Best wash results at 20/30/40/60 °C
- With colour-protection formula for brilliant colours
- Excellent stain removal even at low temperatures

WoolCare delicates detergent (liquid detergent)

- For wool, silks and delicates
- Special care complex based on wheat protein and with colour-protection formula
- Best wash results at 20/30/40/60 °C

Specialist detergents

These specialist detergents are available as convenient single-use capsules.

Caps Sport

- For synthetic fabrics
- Neutralises odours thanks to built-in odour absorber
- Prevents static charge in clothes
- Retains the shape and breathability of synthetic fabrics

Caps DownCare

- For down-filled items
- Retains the elasticity and breathability of down
- Lanolin for effective cleaning and gentle care
- Down does not stick together and retains its loft

Caps WoolCare

- Woollens and delicates detergent
- Special wheat-protein-based agents
- Fibre-protection technology to help prevent items shrinking and felting
- Colour-protection formula for gentle cleaning

Caps CottonRepair

- Special-purpose detergent for cotton fabrics
- Visibly renews fabric with just one wash
- Special Miele formula with Novozymes technology
- Removes pilling and renews colour intensity and brightness
- Depending on fabric do not use more than 1–2 times per year

Fabric care

These fabric care products are available as convenient single-use capsules.

Fabric conditioner cap

- Fabric conditioner for freshly scented laundry
- Pure and thorough cleanliness with a fresh scent
- For soft, bouncy laundry
- Prevents static charge in clothes

Additives

Additives are available as convenient single-use capsules.

Cap Booster

- Highly effective stain remover
- Enzyme technology to help remove stubborn stains
- Suitable for whites and colours
- For best wash results even at low temperatures

Machine care

Descaling agent

- Removes heavy limescale deposits
- Mild and gentle with natural citric acid
- Gentle on heater elements, drum and other components

IntenseClean

- For hygienic cleanliness in washing machines
- Removes grease, bacteria and associated unpleasant odours
- Effective thorough cleaning

Water softener tablets

- Reduces the amount of detergent needed for hard water
- Less detergent residue in fabrics
- Less chemicals in waste water due to reduced amount of detergent

Singapore
Miele Pte. Ltd.
29 Media Circle
#11-04 ALICE@Mediapolis
Singapore 138565
sTel:+65-67351191
Fax: +65-67351161
E-Mail: info@miele.com.sg
Internet: www.miele.sg

Hong Kong, China
Miele (Hong Kong) Limited
41/F - 4101, Manhattan Place
23 Wang Tai Road, Kowloon Bay
Hong Kong
Tel: (852) 2610 1025
Fax: (852) 3579 1404
Email: customerservices@miele.com.hk
Website: www.miele.hk

Malaysia
Miele Sdn Bhd
Suite 12-2, Level 12
Menara Sapura Kencana Petroleum
Solaris Dutamas No. 1
Jalan Dutamas 1
50480 Kuala Lumpur, Malaysia
Phone: +603-6209-0288
Fax: +603-6205-3768

Thailand
Miele Appliances Ltd.
BHIRAJ TOWER at EmQuartier
43rd Floor Unit 4301-4303
689 Sukhumvit Road
North Klongton Sub-District
Vadhana District
Bangkok 10110, Thailand

Germany
Miele & Cie. KG
Carl-Miele-Straße 29
33332 Gütersloh

Miele

WCA 020 Active

en-SG

M.-Nr. 11 679 310 / 05