Miele

Operating instructions
Dishwashers

To avoid the risk of accidents or damage to the appliance, it is **essential** to read these instructions as well as the installation sheet before it is installed and used for the first time.

en-GB HG07 M.-Nr. 12 663 490

Contents

Warning and safety instructions **6**

Notes on the operating instructions **14**
Notes on the layout 14

Scope **15**

Guide to the appliance **16**
Appliance overview 16
Control field 17

Caring for the environment **18**

Before using for the first time **19**
Opening the door 19
Closing the door 20
Water softener 21
Displaying and setting the water hardness 22
Dishwasher salt 23
Filling the salt reservoir 24
Refilling the salt 25
Rinse aid 26
Adding rinse aid 26
Filling the rinse aid container 27

Caring for the environment **29**
Economical dishwashing 29

Loading the dishwasher **30**
General information 30
Upper basket (depending on the model) 32
Adjusting the upper basket 34
Lower basket (depending on the model) 35
Cutlery tray/cutlery basket
(depending on model) 36
Loading the 3D MultiFlex tray 36
Loading the cutlery basket (if present) 37
Loading examples (depending on the model) 38
Dishwashers with cutlery tray 38
Dishwashers with cutlery basket 40

Detergent **42**
Active ingredients 42
Detergent dispensing 43
Adding detergent 44

Operation **45**
Switching on the dishwasher 45

Contents

Selecting a programme 45
Display of programme running time 46
Starting the programme 46
End of the programme 47
Energy management 47
Switching off the dishwasher 48
Unloading the dishwasher 48
Interrupting a programme 49
Cancelling or changing a programme 49

Options 50
Timer 50

Guide for selecting a programme 52

Programme overview 54

Programme options 56
Express 56
Buzzers 57
AutoOpen 58
Switching off the refill reminders 59
Extra clean 60
Extra dry 61
2nd interim rinse 62
Operating hours display 63
Factory defaults 63

Cleaning and care 64
Cleaning the wash cabinet 64
Cleaning the door and the door seal 65
Cleaning the control field 65
Cleaning the appliance front 65
Cleaning the spray arms 66
Checking the filters in the wash cabinet 70
Cleaning the filters 70
Cleaning the water inlet filter 72
Cleaning the drain pump 73

Problem solving guide 75
Technical problems 75
Fault messages 76
Door release 77
Water inlet fault 77
Water drainage fault 78
General problems with the dishwasher 78

Noises 79
Unsatisfactory washing result 81

Service **84**
Contact in the event of a fault 84
EPREL database 84
Warranty 85
Note for test institutes 85

Optional accessories **86**

Installation **88**
The Miele Waterproof system 88
Water inlet 88
Water drainage 90
Electrical connection 91

Technical data **92**

This dishwasher conforms to current safety requirements. Inappropriate use can, however, lead to personal injury and material damage.

Please observe the installation sheet and read the operating instructions carefully before setting up the dishwasher and using it for the first time. They both contain important information on its installation, safety, use and maintenance. This is to protect yourself from injury and prevent damage to the dishwasher.

In accordance with standard IEC 60335-1, Miele expressly and strongly advises that you read and follow the instructions in the chapter on installing the dishwasher as well as the safety instructions and warnings.
Miele cannot be held liable for damage caused by non-compliance with these instructions.

Keep the installation sheet and the operating instructions in a safe place and pass them on to any future owner.

Appropriate use

▶ This dishwasher is intended for use in the home and in similar environments, such as
– shops, offices and similar work settings
– agricultural estates
– by guests in hotels, motels, bed and breakfasts, and other typical domestic settings.

▶ This dishwasher is not intended for outdoor use.

▶ This dishwasher is intended for use at altitudes of up to 4000 m above sea level.

▶ This dishwasher must only be used for cleaning domestic crockery and cutlery. All other types of use are not permitted.

▶ The appliance can only be used by people with reduced physical, sensory or mental capabilities, or lack of experience and knowledge, if they are supervised whilst using it, or have been shown how to use it in a safe way and recognise and understand the consequences of incorrect operation.

Safety with children

▶ Children under 8 years of age must be kept away from the dishwasher unless they are constantly supervised.

▶ Children aged 8 and older may only use the dishwasher without supervision if they have been shown how to use it in a safe manner. Children must be able to understand and recognise the possible dangers caused by incorrect operation.

▶ Children must not be allowed to clean or maintain the dishwasher unsupervised.

▶ Children should be supervised in the vicinity of the dishwasher. Never allow children to play with the dishwasher. There is a danger that children might shut themselves in the dishwasher.

▶ If the automatic door opening mechanism is active (depending on the model), keep young children away from the area in which the door opens. There is a danger of injury in the unlikely event of a fault with the opening mechanism.

▶ Danger of suffocation! Whilst playing, children may become entangled in packaging material (such as plastic wrapping) or pull it over their head and risk suffocation. Keep packaging material away from children.

▶ Keep children away from detergents. Detergents cause severe skin burns and severe eye damage. They can cause burning in the mouth and throat, or inhibit breathing. It is therefore important to keep children away from the dishwasher when the door is open. Detergent residues could still be present in the dishwasher. Seek medical advice immediately if a child has swallowed or inhaled any detergents.

Technical safety

▶ Unauthorised installation, maintenance or repairs could result in unforeseen dangers for the user, for which the manufacturer cannot accept liability. Installation, maintenance or repairs must only be carried out by a qualified specialist or Miele Customer Service.

▶ Damage to the dishwasher can compromise your safety. Before using the dishwasher and in particular following transport, check it for any visible damage. Never use a damaged dishwasher.

▶ The electrical safety of this dishwasher can only be guaranteed when correctly earthed. It is most important that this basic safety requirement is present. If in doubt, the electrical installation should be checked by a qualified electrician.
Miele cannot be held liable for the consequences of an inadequate or lack of earthing system (e.g. electric shock).

▶ Temporary or permanent operation on an autonomous power supply system or a power supply system that is not synchronised with the mains power supply (e.g. island networks, back-up systems) is possible. A prerequisite for operation is that the power supply system complies with the specifications of EN 50160 or an equivalent standard.
The function and operation of the protective measures provided in the domestic electrical installation and in this Miele product must also be maintained in isolated operation or in operation that is not synchronised with the mains power supply, or these measures must be replaced by equivalent measures in the installation. As described, for example, in the current version of BS OHSAS 18001–2 ISO 45001.

▶ The dishwasher must only be plugged into the electricity supply via a suitable switched socket using a fused 3-pin plug (it must not be hard-wired). The electrical socket must be easily accessible after the dishwasher is installed so that it can be disconnected from the electricity supply at any time.

▶ There must be no electrical sockets behind the dishwasher because the building-in niche may be too small. Danger of overheating and fire risk if the dishwasher were to be pushed up against a plug.

▶ The dishwasher must not be installed underneath a hob. The high temperatures radiated by hobs could damage the dishwasher below. For the same reason, the appliance must not be installed next to open fires or other appliances that give off heat, such as heaters etc., not normally found in a kitchen.

▶ Ensure that the connection data on the dishwasher's data plate (fuse rating, frequency and voltage) match the mains electricity supply. This data must correspond in order to avoid the risk of damage to the dishwasher. Compare these before connecting the appliance to the mains. If in any doubt, consult a qualified electrician.

▶ Do not connect the dishwasher to the mains supply until it has been fully installed and any adjustment has been made to the door springs.

▶ The dishwasher may only be operated if the door opening mechanism is working correctly. Otherwise there could be a risk of danger whilst the automatic door opening mechanism (depending on the model) is active.
To check that the door opening mechanism is working correctly:

- The door springs must be evenly adjusted on both sides. They are correctly adjusted when the door remains stationary when left half open (approx. 45° opening angle). It is also important that the door cannot fall open.
- The door locking pins automatically retract when the door opens at the end of the drying phase.

▶ Multi-socket adapters and extension leads do not guarantee the required safety of the appliance (fire hazard). Do not connect the dishwasher to the mains electricity supply using a multi-socket adapter or an extension lead.

▶ The dishwasher must not be used in a non-stationary location (e.g. on a ship).

▶ Do not install the dishwasher in a room where there is a risk of frost occurring. Frozen hoses are at risk of tearing or bursting. The reliability of the electronic control unit may be impaired at temperatures below freezing point.

▶ To avoid any damage to the dishwasher, it must only be operated when it is connected to a fully vented plumbing system.

▶ The plastic housing of the water connection contains a solenoid valve. The housing must not be dipped in water.

▶ There are live wires in the water inlet hose. Do not cut the hose, even if it is too long.

▶ The integrated Miele water protection system (Waterproof system) offers protection from water damage, provided that the following conditions are met:

- Installation has been carried out correctly.
- The dishwasher is properly maintained and parts are replaced where this is noticeably required.
- The stopcock is turned off during longer absences from the home (e.g. whilst on holiday).

The water protection system will work even when the dishwasher is switched off. However, the dishwasher must remain connected to the mains power supply.

▶ The water-connection pressure needs to be between 50 and 1,000 kPa.

▶ A damaged dishwasher could be dangerous. Never use a damaged dishwasher. Contact a qualified specialist or Miele Customer Service for repair.

▶ The manufacturer's warranty will be invalidated if the dishwasher is not repaired by a qualified specialist or Miele Customer Service.

▶ If defective safety-relevant components are replaced, Miele can only guarantee full compliance with safety requirements if genuine Miele replacement parts are used.

▶ During installation, maintenance and repair work, the dishwasher must be disconnected from the mains power supply (switch it off and withdraw the mains plug from the socket).

▶ If the mains connection cable is damaged, it must only be replaced with a specific mains connection cable of the same type (available from the Miele online shop or Miele Customer Service). For safety reasons, such replacement may only be carried out by a qualified specialist or Miele Customer Service.

Correct installation

▶ The dishwasher must be installed and connected in compliance with the supplied installation sheet.

▶ Be careful before and while installing the dishwasher. Some metal parts pose a risk of injury/being cut. Wear protective gloves.

▶ The way in which the dishwasher is installed must not cause doors to be blocked when the door is automatically opened (AutoOpen function).

▶ If the dishwasher is being used behind closed furniture fronts (e.g. doors), ensure that the automatic door opening mechanism is not blocked.
The housing units used must be sufficiently resistant to moisture.
The installation space must be well ventilated.

▶ The dishwasher must be correctly aligned horizontally to ensure problem-free operation.

▶ In order to ensure stability, built-under and integrated dishwashers must only be installed under a continuous worktop that is secured to adjacent cabinetry.
In addition, the dishwasher must be screwed to the adjacent cabinetry (see Installation sheet).

▶ A sink in the adjacent cabinet of the dishwasher must be carefully sealed. Regularly check for leaks to avoid damage to the dishwasher.

▶ The dishwasher must only be built into a tall unit if additional safety precautions are taken. In order to safely install the appliance in a tall unit, please use the Tall unit installation kit and observe the installation sheet provided. Otherwise there is the danger of the unit tipping over.

▶ The door springs must be evenly adjusted on both sides. The door springs are correctly adjusted when a half-opened door (approx. 45° opening angle) remains in that position when released. It is also important that the door cannot fall open.
The dishwasher must only be operated with properly adjusted door springs.
If the door cannot be adjusted properly, contact a qualified specialist or Miele Customer Service.

The minimum/maximum weight of the front panel is quoted in the technical data for your dishwasher on the Miele website.

Correct use

▶ Do not use solvents in the dishwasher. Risk of explosion.

▶ Dishwasher detergents can cause burning on the skin and in the eyes, nose, mouth and throat. Avoid contact with detergents. Do not inhale powder detergents. Do not swallow dishwasher detergents. Seek medical attention immediately if detergent has been swallowed or inhaled.

▶ Avoid leaving the dishwasher door open unnecessarily. You could injure yourself on the open door or trip over it.

▶ Do not sit or lean on the open door. The dishwasher can tip over. This can injure you or damage the dishwasher.
When fully loaded baskets are pulled out, even small additional loads on the open door can cause the dishwasher to tip over.

▶ Crockery may be very hot at the end of the programme. Allow the dishes to cool until they are comfortable enough to handle before unloading them.

▶ Only use detergent and rinse aid formulated for domestic dishwashers. Do not use washing-up liquid.

▶ Do not use any commercial or industrial detergents. These may cause material damage, and there is a risk of a severe explosive chemical reaction (such as an explosive oxyhydrogen gas reaction).

▶ Do not fill the rinse aid reservoir with powder or liquid detergent. This will cause damage to the reservoir.

▶ Do not fill the AutoDos (depending on model) with powder or liquid detergent. Loose detergent will damage the AutoDos.

▶ Do not fill the salt reservoir with powder or liquid detergent. Detergent will damage the water softener.

▶ Only use special coarse-grained dishwasher salt or other pure kitchen salt for reactivation. Other salts may contain insoluble additives that can impair the functioning of the water softener.

▶ In dishwashers with a cutlery basket (depending on the model), knives and forks should be placed with the handles upwards in the basket for safety reasons. Knives and forks placed with the handles downwards pose a danger of injury.

▶ Plastic items that cannot withstand being washed in hot water, such as disposable plastic containers or plastic cutlery, should not be cleaned in the dishwasher. The high temperatures in the dishwasher may cause them to melt or lose shape.

▶ If you use the timer option, the detergent compartment must be dry. If it is not, wipe the detergent compartment until dry. The detergent will clump together if the detergent compartment is not dry, and this may mean that it is not fully rinsed out.

▶ Please observe the information given in the “Technical data” chapter regarding the capacity of the dishwasher.

Accessories and spare parts

▶ Miele assumes no liability for the use of accessories that are not genuine Miele accessories. Miele is not liable for warranty, guarantee and/or product liability claims if damage or defects are due to the use or installation of accessories that do not originate from Miele or have not been approved by Miele.

▶ Miele original spare parts are kept in stock for at least 10 years and up to 15 years after discontinuation of your dishwasher.

Transport

▶ Damage to the dishwasher can compromise your safety. Before using the dishwasher, check it for any visible transport damage. Never use a damaged dishwasher.

▶ Only transport the dishwasher in an upright position so that no water flows into the electrical controls, as this would cause faults.

▶ If you wish to transport the dishwasher, empty it and securely fasten all loose parts such as baskets, hoses and mains connection cables.

Notes on the operating instructions

These operating instructions apply to several different dishwasher models of different heights.
The different dishwasher models will be named as follows:
normal = dishwasher measuring 80.5 cm high (built-in appliance) or 84.5 cm high (freestanding appliance)
XXL = dishwasher measuring 84.5 cm high (built-in appliance).

Notes on the layout

Warnings

⚠ Information which is important for safety is highlighted in a thick framed box with a warning symbol. This alerts you to the potential danger of injury to people or damage to property.

Read these warning notes carefully and observe the procedural instructions and codes of practice they describe.

Notes

Notes provide information of particular importance that must be observed.

They are highlighted in a thick framed box.

Additional information and comments

Additional information and comments are highlighted in a box framed with a single black line.

Instructions for the user

Instructions on how to operate the dishwasher are identified by marked operating steps. They explain the procedure step by step.
Operating steps are indicated by a black square bullet point.

Example:

■ Select the desired setting and press *OK* to confirm.

The appliance is supplied with:

- Dishwasher
- Operating instructions for operating the dishwasher
- Installation sheet for installing the dishwasher
- Other installation accessories for installing the dishwasher (see installation sheet)
- Funnel for filling the dishwasher salt
- Additional printed matter and add-ons if required

Guide to the appliance

Appliance overview

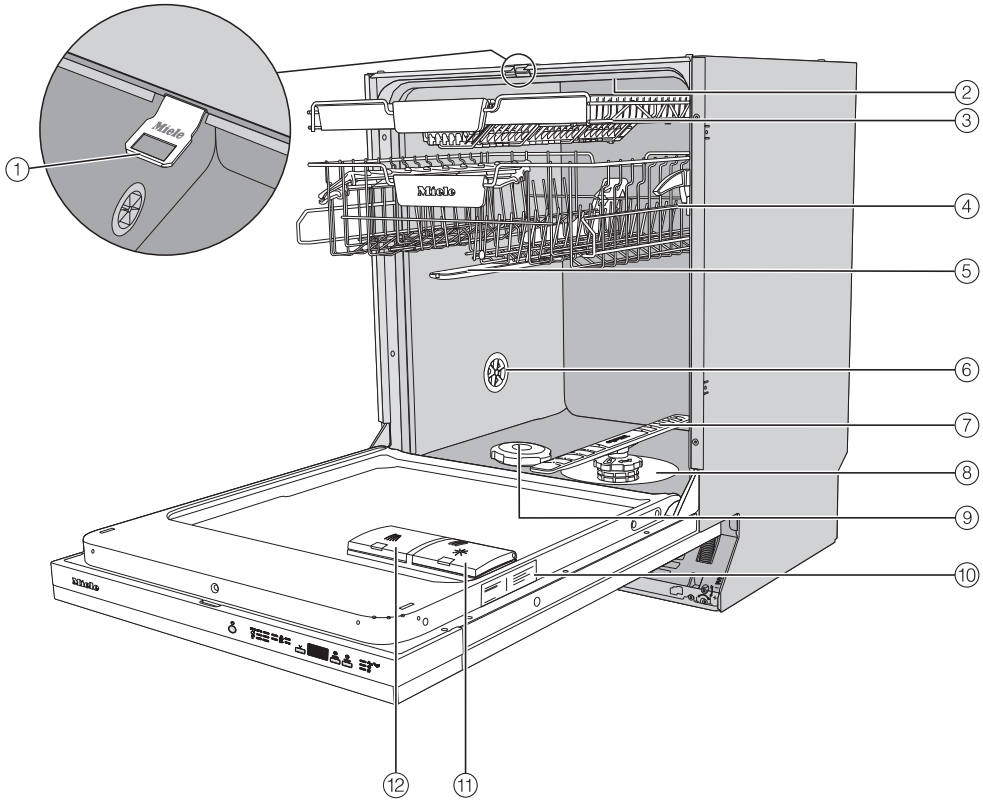

① Door locking pins
② Top spray arm
③ Cutlery tray (depending on model)
④ Upper basket (depending on model)
⑤ Middle spray arm
⑥ Aeration valve
⑦ Bottom spray arm
⑧ Filter combination
⑨ Salt reservoir
⑩ Data plate
⑪ Rinse aid reservoir
⑫ Detergent compartment

Control field

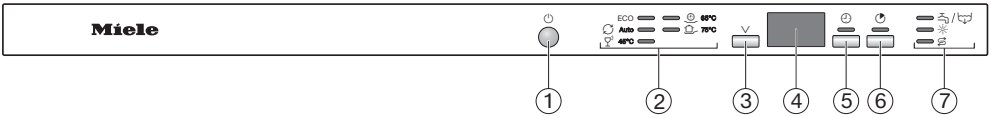

① *ON/OFF* button
For switching the dishwasher on and off.

② Programme selection

ECO	= ECO
Auto	= Auto 45–65 °C
45 °C	= Gentle 45 °C
65 °C	= QuickPowerWash 65 °C
75 °C	= Intensive 75 °C

③ Programme selection button ∨
For programme selection.

④ Time display

⑤ *Timer* button
For selecting a later programme start.

⑥ *Express* button
For reducing the programme duration.

⑦ Indicator lights/Refill reminders
/ = Inlet / Drain
= Rinse aid
= Salt

Caring for the environment

Disposing of the packaging material

The packaging material is used for handling and protects the appliance from transport damage.

Recycling the packaging material reduces the use of raw materials. Use material-specific collection points for valuable materials and take advantage of return options. Your Miele dealer will take the packaging material away.

Disposing of your old appliance

Electrical and electronic appliances contain many valuable materials. They also contain certain materials, compounds and components which were essential for their correct functioning and safety. These could be hazardous to human health and to the environment if disposed of with household waste or if handled incorrectly. Please do not, therefore, dispose of your old appliance with household waste.

Instead, please make use of officially designated collection and disposal points to dispose of and recycle electrical and electronic appliances in your local community, with your dealer or with Miele, free of charge. By law, you are solely responsible for deleting any personal data from the old appliance prior to disposal. You are legally obliged to remove any old batteries which are not securely enclosed by the appliance and to remove any lamps without destroying them, where this is possible. These must be taken to a suitable collection point where they can be handed in free of charge. Please ensure that your old appliance poses no risk to children while being stored for disposal.

Every dishwasher is tested at the factory. There will be residual water in the appliance from this test. It is not an indication that the dishwasher has been used previously.

Opening the door

In some programmes, the door automatically opens slightly to assist the drying process.
This function can be deactivated, if preferred (see “Programme options – AutoOpen”).

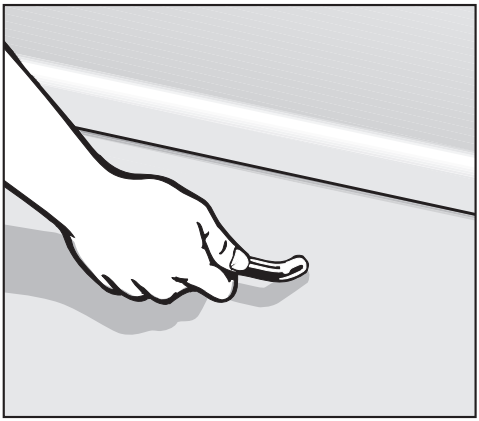

- Pull the handle firmly to open the door.
- Open the door fully to disengage the locking mechanism.

At the end of the programme, if the AutoOpen function is on, the door lock catch automatically retracts.
The door lock catch must be fully retracted before you close the door again.

To prevent a technical fault, do not hold the door lock catch firmly when it is retracting.

If the door is opened during operation all wash functions are automatically interrupted.

⚠ Risk of scalding due to hot water.
During operation, water in the dishwasher may be very hot.
During operation, only open the door with extreme caution.

⚠ Risk of injury due to door opening automatically.
The door may open automatically at the end of the programme.
Keep the area around the door free of obstructions.

⚠ Caution: Avoid blocking doors.
The automatic door opening function could cause doors to be blocked.
Install the dishwasher so that the door does not block any other doors or furniture fronts when it opens automatically.

Closing the door

- Push the baskets right in.
- Raise the door upwards until the catch engages.

At the end of the programme, if the AutoOpen function switched is on, the door locking pin must be fully retracted before the door is closed. Otherwise, the door locking pin will hit the door.

⚠ Risk of crushing due to the door closing.

When closing the door, you are at risk of shutting your fingers in it.

Do not put your hand inside the door as it is closing.

Water softener

In order to achieve good cleaning results, the dishwasher needs to operate with soft water. Hard water results in the build-up of calcium deposits on crockery and on the inner surfaces of the appliance.
Mains water with a water hardness level higher than 0.9 mmol/l (5 °dH – German scale) must be softened. This occurs automatically in the integrated water softener. The water softener is suitable for a water hardness level of up to 12.6 mmol/l (70 °dH – German scale).

In order to be reactivated, the water softener requires dishwasher salt. Depending on the water hardness level (< 3.8 mmol/l, or < 21 °dH – German scale), dishwasher salt is not required if combination detergents are being used (see “Detergent – Active ingredients”).

- You should programme the dishwasher to the correct water hardness for your area.
- Your local water authority will be able to advise you of the water hardness level in your area.
- Where the water hardness fluctuates, e.g. between 1.8 and 2.7 mmol/l (10–15 °dH – German scale), always programme the dishwasher to the higher value (2.7 mmol/l or 15 °dH in this example).

If the water hardness in your area is available in a unit other than °dH, you can convert the values as follows:
1 °dH = 0.18 mmol/l = 1.78 °fH

The dishwasher is programmed at the factory for a water hardness level of 2.5 mmol/l (14 °dH – German scale).

If your water hardness level corresponds to this setting, you can skip to the next section.

However, if you have a different water hardness level, you must adjust the water softener to match your water hardness.

Displaying and setting the water hardness

- Open the door.
- Switch the dishwasher off with the ⏻ button, if it is switched on.
- Press the ◔ button in and, **whilst holding it in**, switch the dishwasher on using the ⏻ button.
  Keep the ◔ button pressed in for at least 4 seconds until the ◔ indicator light comes on.

If this does not happen, start the procedure from the beginning again.

- Press the ∨ programme selector 2 times.

The top left programme indicator light will flash rapidly 2 times at intervals.

The value set for the water hardness is shown as a figure after *P* in the time display.

P14 will start flashing in the time display. A water hardness of 14 °dH is set.

- Use the ◔ button to set the water hardness value in your area.
  The dosage amount increases each time you press the button. When the highest value is reached, the setting starts again from the beginning.

The setting is now saved.

- Switch the dishwasher off with the ⏻ button.

Dishwasher salt

In order to maintain the functions of the water softener, it must be reactivated regularly. Reactivation occurs automatically every ninth programme sequence. At the start of the next programme, an additional 4.4 l of water is required for this process. Energy consumption increases by 0.015 kWh and the programme is extended by approx. 3 minutes.
The above applies to the ECO programme at a water hardness of 2.5 mmol/l (14 °dH – German scale). For other programmes and water hardness levels, only the frequency of reactivation will differ.

In order to be reactivated, the water softener requires dishwasher salt. Depending on the water hardness level (< 3.8 mmol/l, or < 21 °dH – German scale), dishwasher salt is not required if combination detergents are being used (see “Detergent – Active ingredients”).

In the UK, the use of dishwasher salt is recommended in medium and hard water areas, including when combination detergents are used, to support the water-softening system and optimise detergent performance.

If the water in your area is very soft and constantly **lower than 0.9 mmol/l (5 °dH – German scale)**, you do **not** need to add dishwasher salt. The salt refill reminder will automatically switch off after the water hardness has been set accordingly (see “Before using for the first time – Displaying and setting the water hardness”).

⚠ Damage to the water softener from detergent.
Detergent will damage the water softener.
Do not fill the salt container with powder or liquid detergent.

⚠ Damage caused by using unsuitable salts.
Some types of salt may contain insoluble components which can cause the water softener to malfunction.
Only use special coarse-grained dishwasher salt or other pure kitchen salt for reactivation.

If you only ever use combination detergent products containing salt and rinse aid in your dishwasher, you can switch off both refill reminders if you wish (see “Programme options – Switching off the refill reminders”).

Please make sure that if you stop using combination detergent products, you refill the dishwasher salt and rinse aid. Switch the refill reminders back on if required.

Filling the salt reservoir

Before filling the salt reservoir for the first time, you must fill it with approx. 2 l of water to enable the salt to dissolve.

Once the dishwasher has been used once, there is always sufficient water in the salt reservoir.

- Remove the lower basket from the wash cabinet and unscrew the salt reservoir cap.

⚠ Danger of corrosion due to saline solution.

Water or saline solution will run out of the reservoir when the cap is opened. Saline solution that runs out can cause corrosion in the wash cabinet and to the dishwasher load.

The salt reservoir should therefore only be opened in order to replenish the salt.

- Fill the salt reservoir with approx. 2 l of water (first use only).

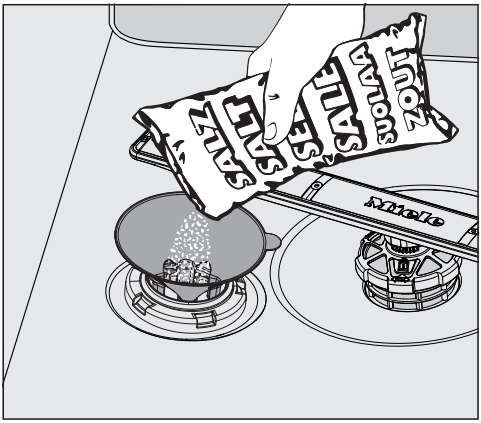

- Place the funnel provided over the salt reservoir and carefully fill with dishwasher salt until the reservoir is full. The salt reservoir holds up to 2 kg of salt, depending on the type of salt used.
- Clean off salt residues from around the salt reservoir opening. Next, screw the salt reservoir cap on again firmly.
- Immediately after filling the salt reservoir and each time you remove the salt container cap, run the 65 °C *QuickPowerWash* programme with the *Express* programme option selected without a load in the dishwasher to dissolve and remove any traces of salt from the wash cabinet.

Refilling the salt

- When the *Salt* indicator lights up, wait until the end of the programme and then refill the salt reservoir.

⚠ Risk of corrosion due to saline solution.
Saline solution that runs out can cause corrosion in the wash cabinet and to the load items.
Each time you remove the salt reservoir cap, you must run the 65 °C *QuickPowerWash* programme with the *Express* programme option selected without any load items in the dishwasher. This will dissolve and remove any traces of salt from the wash cabinet.

After the salt reservoir has been filled, the refill reminder may still appear in the display if the salt concentration has not yet reached the correct level. It will go out once the salt concentration has reached the correct level.

The salt refill indicator will be switched off if you have programmed the dishwasher for a water hardness below 0.9 mmol/l (5 °dH – German scale).

Rinse aid

Rinse aid is necessary to ensure that water does not cling and leave marks on crockery during the drying phase, and helps crockery dry faster after it has been washed.
Rinse aid is poured into the container and the amount set is dispensed automatically.

⚠ Washing-up liquid or detergent can cause damage.
Washing-up liquid and detergent can damage the rinse aid container.
Only fill it with rinse aid formulated for domestic dishwashers.

Alternatively, you could use liquid citric acid at a concentration of up to 10 %. The resulting rinsing and drying quality on the crockery will not, however, be as good as when rinse aid is used.

⚠ Risk of acid damage.
The dishwasher can be damaged by high concentrations of acid.
Under no circumstances should you use citric acid with a higher acid content.

If you only ever wish to use combination products in your dishwasher, you do not need to add rinse aid.
However, for optimum rinsing and drying results, use dishwasher detergent and add dishwasher salt and rinse aid separately.

Please make sure that if you stop using combination detergents, you refill the dishwasher salt and rinse aid.
Switch the refill reminders back on if required.

Adding rinse aid

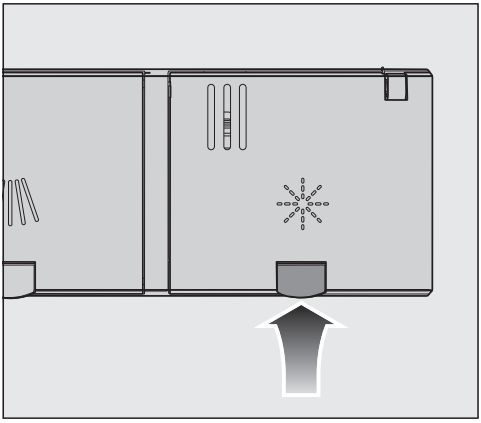

- Press the yellow button ✳ on the lid of the rinse aid container.

The lid will spring open.

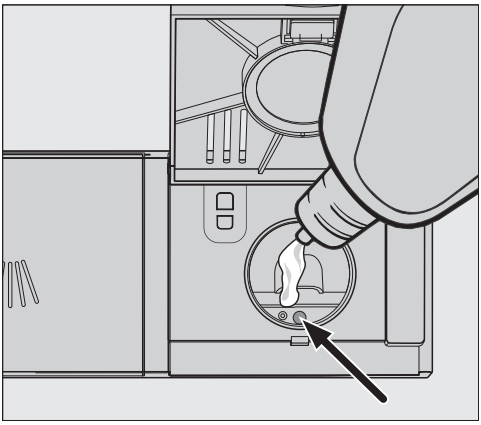

- Fill with rinse aid until the filling level indicator (arrow) changes to a dark colour while the door is horizontally open.

The rinse aid container holds approximately 110 ml.

- Close the lid firmly until you hear it click into place. Otherwise, water can enter the rinse aid container during a programme.

- Wipe up any spilled rinse aid. This prevents excess foam developing during the next programme.

Filling the rinse aid container

When the refill reminder ✳ *Rinse aid* appears in the display, the container contains sufficient rinse aid for 2 to 3 programmes only.

- Refill with rinse aid in plenty of time.

The rinse aid refill reminder will disappear.

> If you only ever use combination detergent products containing salt and rinse aid in your dishwasher, you can switch off both refill reminders if you wish (see “Programme options – Switching off the refill reminders”).

Setting the rinse aid dosage

You can adjust the rinse aid dosage for best results.
The rinse aid dosage can be set from 0 to 6 ml.
3 ml is the factory default setting.

The rinse aid dosage can turn out to be higher than the set value due to the automatic adjustment of the programme.

If spots appear on crockery and glassware:

- Increase the rinse aid dosage.

If clouding or smearing appears on crockery and glassware:

- Decrease the rinse aid dosage.

- Open the door.
- Switch the dishwasher off with the ⏻ button, if it is switched on.
- Press the ◔ button in and, **whilst holding it in**, switch the dishwasher on using the ⏻ button.
  Keep the ◔ button pressed in for at least 4 seconds until the ◔ indicator light comes on.

If this does not happen, start the procedure from the beginning again.

- Press the ∨ programme selection button 3 times.

The top left indicator light will flash rapidly 3 times at intervals.

The dosage set will appear in the time display after *P*.

P 3 will start flashing in the time display.
Setting 3 is set.

- Use the ◔ button to select the required setting.
  The dosage amount increases each

time you press the button. When the highest value is reached, the setting starts again from the beginning.

The setting is now saved.

- Switch the dishwasher off with the ⏻ button.

Economical dishwashing

This dishwasher is exceptionally economical in its use of water and electricity.
You can make the most of your appliance by following these tips:

- Washing in a dishwasher generally uses less water and energy than washing by hand.
- There is no need to pre-wash items under running water, and this unnecessarily increases water and energy consumption.
- For the most economical dishwashing, make full use of the basket capacity without overloading the dishwasher. This results in the most economical dishwashing in terms of energy and water consumption.
- Choose the programme to suit the type of crockery being washed and the degree of soiling (see “Programme overview”).
- Select the *ECO* programme for energy-saving dishwashing. This programme is the most efficient in terms of its combined energy and water consumption for cleaning crockery with a normal level of soiling.
- Follow the detergent manufacturer’s recommendations on detergent dosage.
- When using powder or liquid detergent, you can use $^{1}/_{3}$ less detergent if the baskets are only half full.
- You can connect the dishwasher to a hot water supply. A hot water connection is particularly suitable with energy-saving water heating sources, such as solar energy with a circulation system.
  If the water is heated by electricity, we would recommend connection to cold water.

General information

Remove coarse food residues from crockery.

There is no need to pre-rinse items under running water.

⚠ Damage can be caused by ash, sand, wax, lubricating grease or paint. These substances will contaminate the dishwasher and can then no longer be removed.
Do not wash items soiled with these substances in the dishwasher.

Crockery can be loaded anywhere in the baskets, but the following notes should be observed:

- Do not place crockery and cutlery inside other items where they will cover one another.
- Load the crockery so that water can access all surfaces. This ensures that they get properly cleaned.
- Make sure that all items are securely positioned.
- Hollow items such as cups, glasses, pots etc. must be placed upside down in the baskets.
- Tall and narrow hollow items, such as champagne glasses, should be placed in the middle of the basket rather than in the corners. This ensures the hollow items are more easily accessed by the water jets.
- Wide-based items should be placed at an angle so that water can run off them freely.
- The spray arms must not be blocked by items that are too tall or hang through the baskets. Test for free movement by manually rotating the spray arms.
- Make sure that small items cannot fall through the holders in the baskets. Small items such as lids should therefore be placed in the 3D MultiFlex tray or cutlery basket (depending on model).

Some foods may contain natural dyes, e.g. carrots, tomatoes or ketchup. These dyes can discolour plastic items in the dishwasher if large quantities of these foods are in contact with the crockery inside the appliance. The stability of plastic items is not affected by this discolouration.
Washing silverware can also cause plastic items to discolour.

Items not suitable for dishwashers:

- Wooden cutlery and crockery or items with wooden parts: these may discolour and fade. The glue used in these items is not dishwasher-proof and wooden handles may come loose after being washed in a dishwasher.
- Craft items, antiques, valuable vases and decorative glassware: such items are not dishwasher-proof.
- Plastic items that are not heat resistant: the high temperatures in the dishwasher may cause them to melt or lose shape.
- Copper, brass, tin and aluminium items: these may discolour or become dull.
- Colours painted over a glaze: this type of decoration may fade after a number of cycles.
- Delicate glassware and glassware containing lead crystal: clouding may occur over time.

Silverware

⚠ Risk of damage due to unsuitable detergents.
If silverware is cleaned using an unsuitable cleaning agent, it can be irreparably damaged.

Silverware that has been in contact with foods containing sulphur can discolour. These include egg yolk, onions, mayonnaise, mustard, pulses, fish, fish brine and marinades.
Silverware previously cleaned with a **silver polish** may still be damp or spotted at the end of a programme, where water has not run off smoothly.

Tip: Rub the silver dry with a cloth.

⚠ Damage due to caustic alkaline cleaning agents.
Aluminium parts (e.g. the grease filters of cooker hoods) can be damaged by caustic alkaline cleaning agents. In extreme cases, there is a risk of an explosive chemical reaction (such as an explosive oxyhydrogen gas reaction).
Aluminium components must not be cleaned in the dishwasher with caustic alkaline commercial or industrial cleaning agents.

Tip: When purchasing new crockery and cutlery, make sure they are dishwasher-proof if you want to wash them in the dishwasher.

Glass care

- Clouding may occur on glasses after frequent washing in the dishwasher. When washing delicate glassware in the dishwasher, ensure that only a special glass care programme with very low temperatures is selected (see “Programme overview”). This will reduce the risk of clouding.
- Purchase glassware that is dishwasher-safe (e.g. Riedel glassware).
- Use detergents with glass protective additives.

Upper basket (depending on the model)

See “Loading the dishwasher – Loading examples” for examples of how to load crockery and cutlery.

Loading the upper basket

⚠ Damage due to leaking water.
If you run the dishwasher without the upper basket, water can leak out of the dishwasher.
Only run the dishwasher with the upper basket in place (except during the Tall items programme, if available).

- Use the upper basket for small, lightweight and delicate items such as cups, saucers, glasses and dessert bowls.
  Shallow pots can also be placed in the upper basket.
- Long items such as ladles and mixing spoons should be placed lying down across the front of the upper basket.

Loading the FlexCare cup rack

You can put cups, small bowls and flat crockery on the FlexCare cup rack. Glasses can be arranged along the cup rack so they sit securely during the programme.

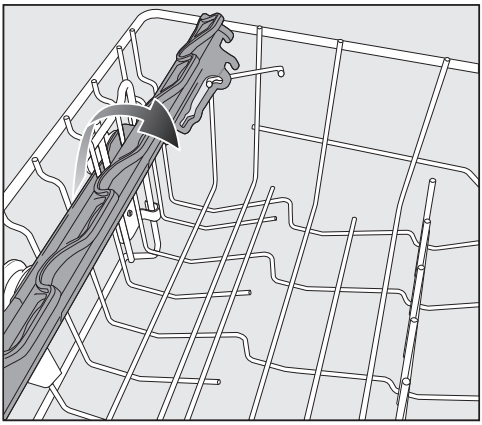

- Lower the cup rack to do so.
- Raise the cup rack upwards to make room for tall items.

Adjusting the FlexCare cup rack

You can set the height and depth of the cup rack at 2 different levels so that it can accommodate larger cups and so that taller crockery can be placed underneath it.

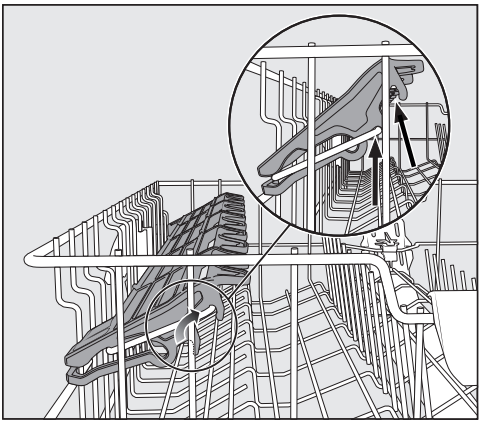

- Pull the cup rack upwards and click it into the desired position (see arrow).

Adjusting the upper basket

In order to gain more space for taller pieces of crockery in the lower basket or upper basket, the upper basket can be adjusted on 3 levels with 2 cm between each level.

The upper basket can also be set at an angle so that water can run off freely from recesses. Make sure, however, that the basket can slide smoothly in and out of the wash cabinet.

- Pull out the upper basket.

Raise the upper basket:

- Lift the basket up until it clicks into place.

Lower the upper basket:

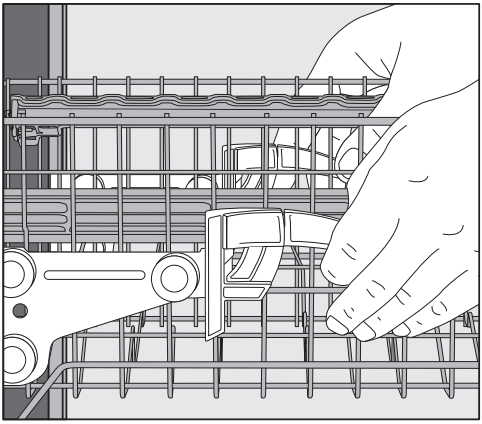

- Pull upwards on the levers at either side of the upper basket.
- Adjust the basket to the desired height and then push the levers securely back down into position.

When adjusting the upper basket, make sure that tall plates in the lower basket do not block the middle spray arm.

Lower basket (depending on the model)

See “Loading the dishwasher – Loading examples” for examples of how to load crockery and cutlery.

Loading the lower basket

- Place larger and heavier items such as plates, serving platters, saucepans, bowls etc., in the lower basket. Glasses, cups and small plates and saucers can also be placed in the lower basket.

Loading the MultiComfort zone

The rear section of the lower basket is used for washing cups, glasses, plates and pots and pans.

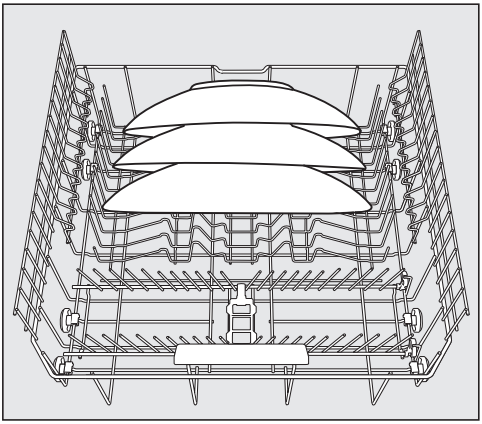

- Place very large plates in the middle of the lower basket.

Tip: When tilted, plates up to 35 cm in diameter can be accommodated.

Lowering the spikes

The rows of spikes at the front are used for washing plates, soup bowls, platters, dessert bowls and saucers.

Both right-hand rows of spikes can be lowered to make more room for large items, e.g. pots, pans and serving dishes.

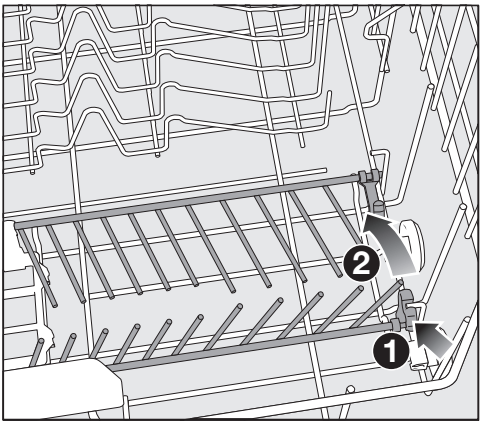

- Press the yellow lever downwards ❶, and then lower the rows of spikes ❷.

Cutlery tray/cutlery basket (depending on model)

See the “Loading the dishwasher” chapter, “Loading examples” section for examples of how to load crockery and cutlery.

- Load the cutlery into the 3D MultiFlex tray or into the cutlery basket (depending on the model).

Loading the 3D MultiFlex tray

To make unloading easier, cutlery should be grouped in zones, one for knives, one for forks, one for spoons, etc.

Spoon heads should be placed in contact with at least one of the serrated retainers on the base of the tray to ensure that water runs off them freely.

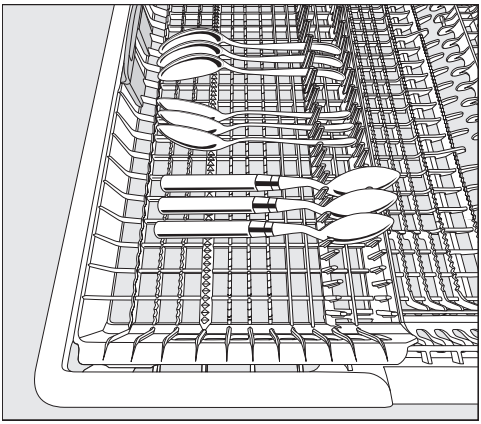

- If spoon handles do not fit between the holders, then lay them the other way round.

You can push the left insert to the middle in order to accommodate tall items of crockery and long stemmed glasses in the upper basket.

You can put large and long cutlery in the recessed centre part of the tray.

Arrange tall items (such as cake servers) so that they do not block the upper spray arm.

You can adjust the height of the right-hand insert to create more space in the right-hand part of the tray for larger cutlery items or smaller pieces of crockery.

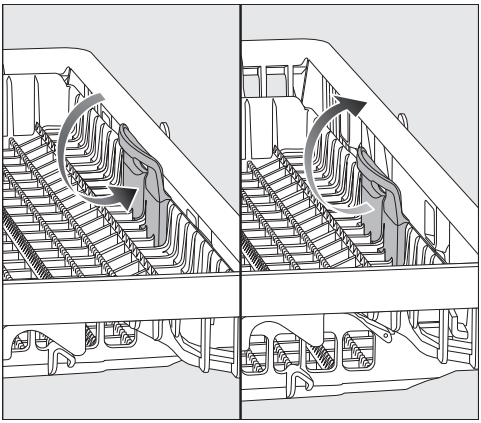

- Pull the insert inwards by the yellow handle and click it into place in one of the two positions.

Loading the cutlery basket (if present)

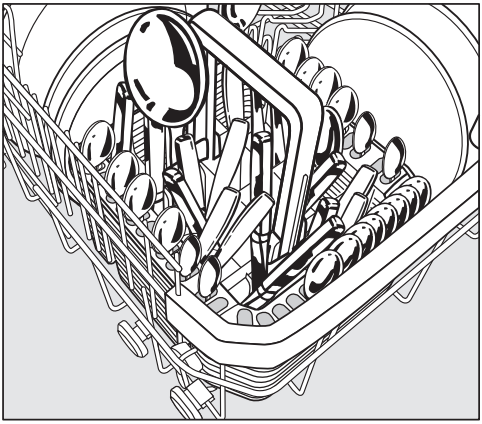

The cutlery basket can be placed anywhere on the front rows of spikes in the left or right corner of the lower basket.

- To avoid the risk of injury, knives and forks should be placed with the handles upwards in the cutlery basket.
- Place small items of cutlery in the individual slots on 3 sides of the cutlery basket.

Loading the cutlery insert for the cutlery basket

Use the insert supplied for heavily soiled items of cutlery. As this insert separates the items, they do not overlap and can be more easily accessed by the water jets.

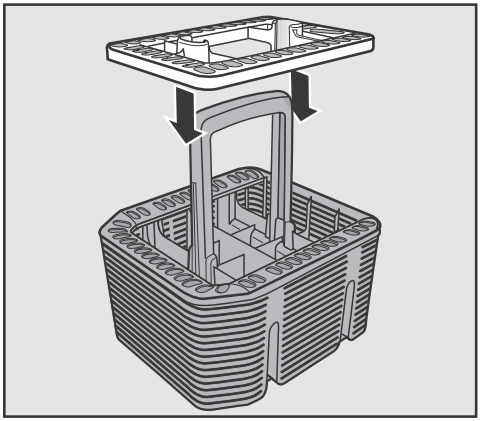

- Fit the insert onto the cutlery basket if required.

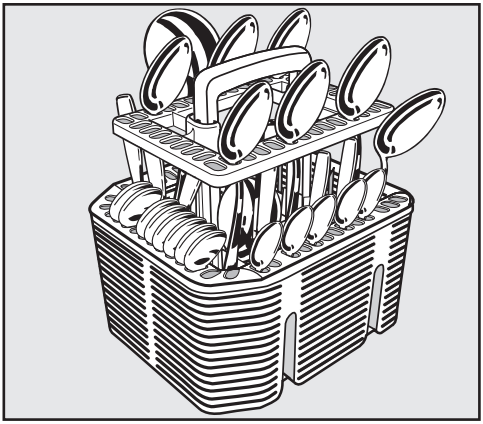

- Place cutlery into the insert with the handles facing downwards.
- Arrange them evenly along the insert.

Loading examples (depending on the model)

Dishwashers with cutlery tray

Upper basket

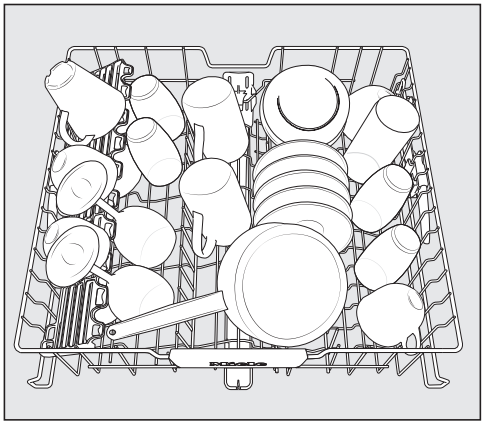

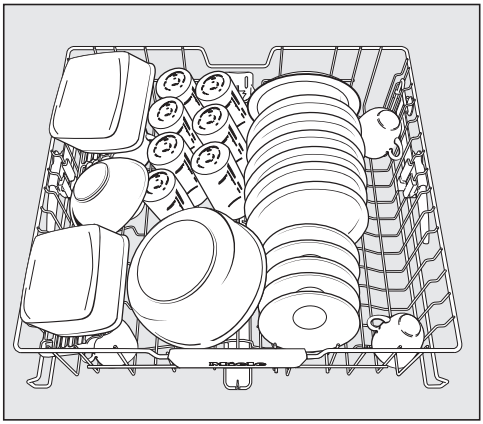

Lower basket

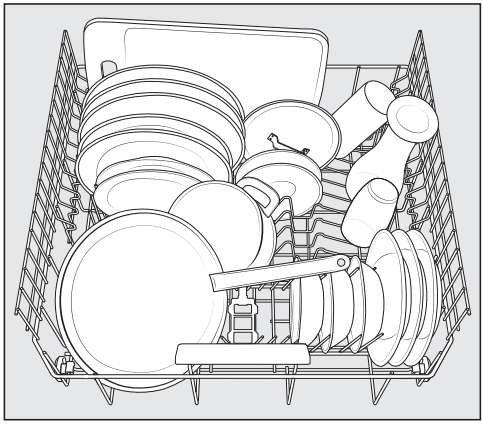

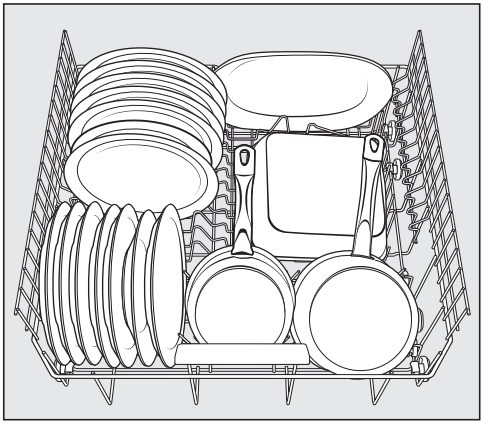

Cutlery tray

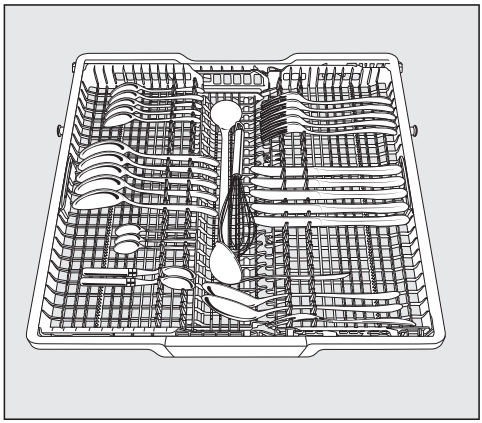

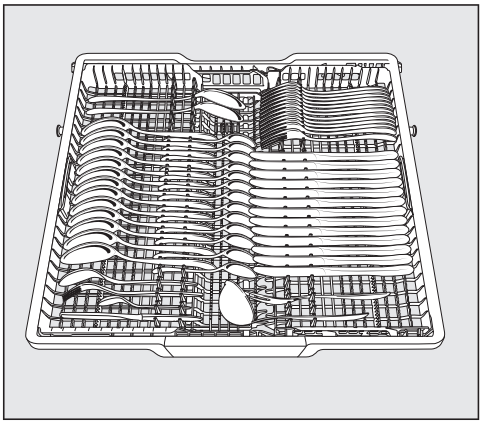

Heavily soiled crockery

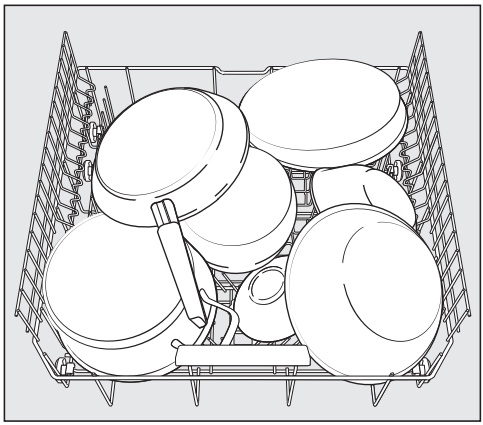

Dishwashers with cutlery basket

Upper basket

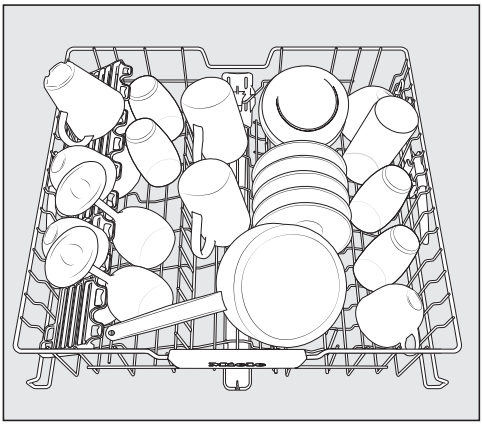

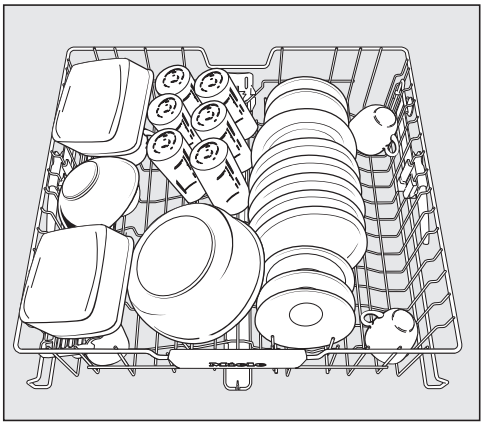

Lower basket

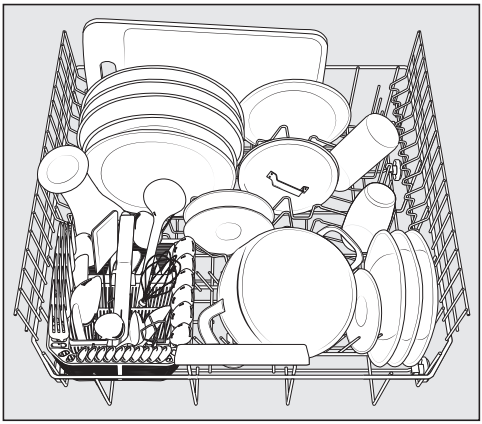

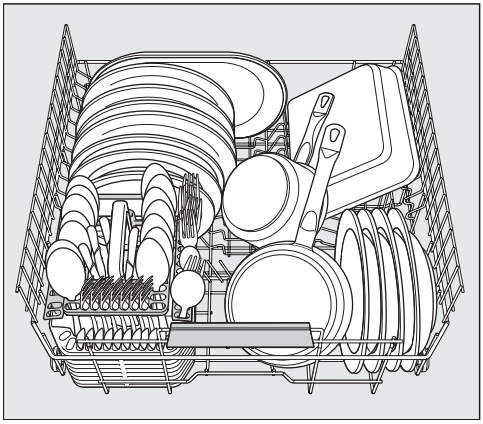

Cutlery basket

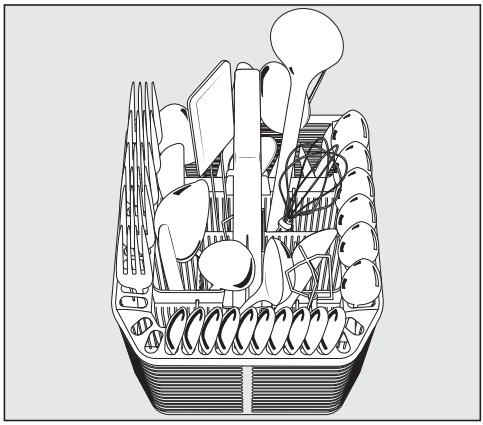

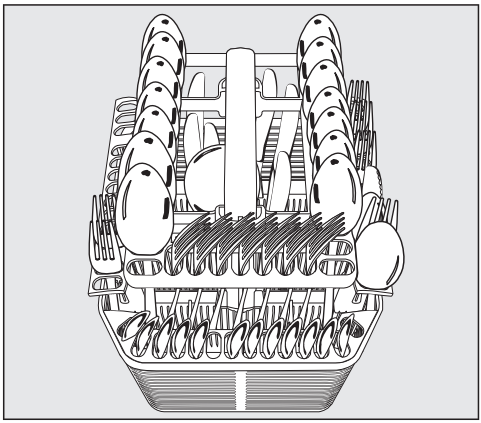

Heavily soiled crockery

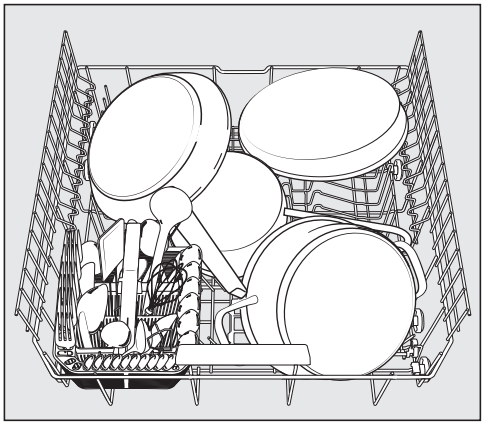

Active ingredients

⚠ Risk of damage due to unsuitable detergents.
Detergents that are not suitable for domestic dishwashers can cause damage to the dishwasher or to the load items.
Only use detergents formulated for domestic dishwashers.

Modern detergents contain various active ingredients, the most important of which are:

- Water softening complexing agents to prevent limescale.
- Alkalis to aid removal of dried-on soiling.
- Enzymes to break down starch and loosen protein.
- Oxygen-based bleaching agents to remove coloured stains (e.g. tea, coffee, tomato sauce).

Most dishwasher detergents are mildly alkaline and contain enzymes and oxygen bleach.

There are different types of detergent:

- Powder and liquid gel detergents. These detergents allow you to adjust the amount dispensed according to the load size and the level of soiling.
- Detergent tabs. These are suitable for most levels of soiling.

As well as the usual detergents, combination products are also available. These contain rinse aid and water softener (dishwasher salt).
Only use these combination detergents for the water hardness levels recommended by the manufacturer on the packaging.
The cleaning and drying performance of these combination detergents can vary greatly.
Please make sure that if you stop using combination detergent products, you refill the dishwasher salt and rinse aid. Switch the refill reminders back on if required.

For optimum cleaning and drying results, use dishwasher detergent and dispense salt and rinse aid separately.

⚠ Risk of chemical burns from detergent.
Dishwasher detergents can cause burning on the skin and in the eyes, nose, mouth and throat.
Avoid contact with detergents.
Do not inhale powder detergents. Do not swallow dishwasher detergents. Seek medical attention immediately if detergent has been swallowed or inhaled.
Keep children away from detergents. Detergent residues could still be present in the dishwasher. Keep children away from the dishwasher when the door is open. Do not fill the detergent dispenser until just before starting the programme and activate the door safety lock (depending on model).

Detergent dispensing

The detergent compartment holds a maximum of 50 ml.

There are marks in the detergent compartment to aid with dispensing: 20, 30, max. When the door is opened to a horizontal position, they show the approximate fill level in ml and the maximum fill height.

- Follow the detergent dosage recommended by the manufacturer on the packaging.
- Unless directed otherwise, use one detergent tab or add 20 to 30 ml of detergent to the detergent compartment, depending on the degree of soiling of the crockery.

Failure to dispense the recommended amount of detergent may impair cleaning results.

Some tabs may not dissolve completely when the programme *QuickPowerWash* is used.

Detergent

Adding detergent

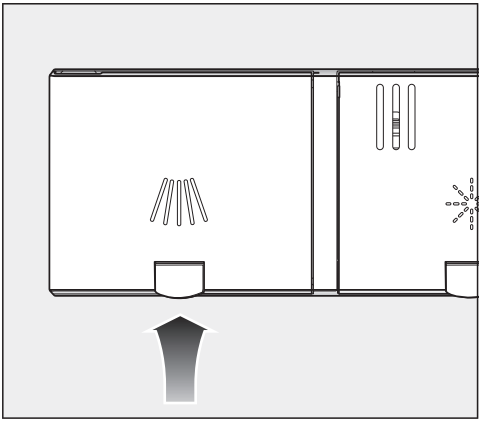

- Press the yellow button /||\\ on the lid of the detergent compartment.

The lid will spring open.
The lid will also open at the end of a programme sequence.

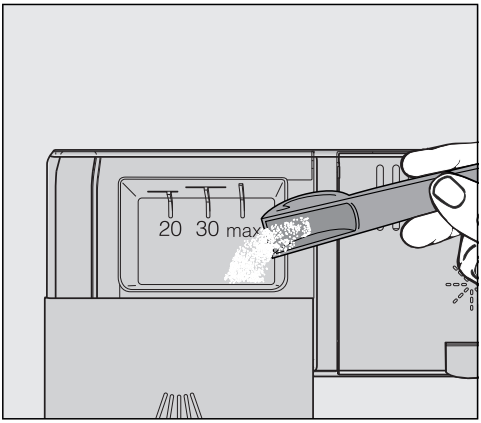

- Add the detergent to the detergent compartment.
- Push the lid shut until you hear it click into place.

The detergent must not cause the detergent compartment lid to get stuck. This can prevent the lid from opening during the programme sequence.
Do not overfill the detergent compartment.

- Ensure that the detergent packaging is properly closed after use. This prevents the detergent from getting damp and clumping together.

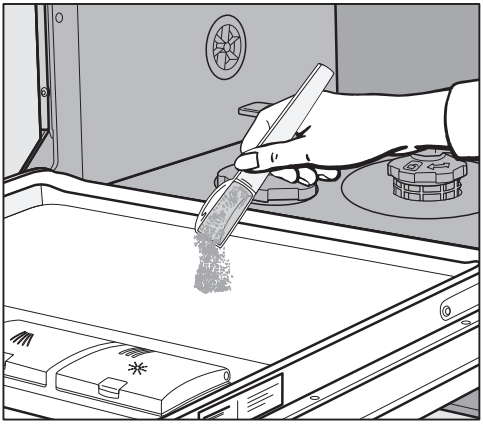

- You can also apply a small amount of detergent to the inner panel of the door in programmes that have a pre-wash stage (see “Programme overview”).

Switching on the dishwasher

- Open the stopcock, if it is closed.
- Open the door.
- Make sure the spray arms can rotate freely.
- Press the ⏻ button.

The indicator light for the programme selected will come on.

Selecting a programme

Choose your programme according to the type of crockery and the degree of soiling.

The different programmes and their uses are described under **“Programme overview”**.

- Use the programme selection button ∨ to select the programme you want.

The indicator light for the programme selected will come on.
The programme duration will appear in hours and minutes in the display.

You can now select programme options (see “Programme options”).

If any programme options are selected, the appropriate indicator lights will also light up.

Display of programme running time

The duration of the programme selected appears in hours and minutes in the display before the programme begins. If the door is opened during the programme sequence, the time left until the end of the programme is displayed.

The displayed duration may vary for the same programme. It is influenced by, for example, the temperature of the incoming water, the reactivation cycle of the water softener, the detergent type and the amount of crockery and how soiled it is.

When a programme is selected for the first time, the display will show the average running time for a cold water connection.

The running times shown in the “Programme overview” chapter refer to standard test loads and temperatures.

For each programme sequence, the control module calculates the programme running time according to the temperature of the water taken into the dishwasher and the size of the load.

Starting the programme

- Start the programme by closing the door.

⚠ Risk of scalding due to hot water.

During operation, water in the dishwasher may be very hot.

During operation, only open the door with extreme caution.

End of the programme

The buzzers may sound at the end of the programme.

The programme has ended when 0:00 shows in the time display.

In some programmes, if the AutoOpen function is activated, the door will automatically open slightly (see “Programme options – AutoOpen”). This improves the drying process.

The drying fan may continue to run for a few minutes at the end of the programme.

⚠ Risk of damage due to steam.

Steam from the dishwasher could damage delicate housing units and the edges of worktops when you open the door at the end of the programme if the fan is no longer running.

If you have deactivated the automatic door opening function (see “Programme options – AutoOpen”), and would like to open the door as soon as the programme has finished, make sure that you open the door fully.

Energy management

To save energy, the dishwasher will switch off automatically 10 minutes after the last time a button is pressed or after the end of a programme.

You can switch the dishwasher back on again with the ⏻ button.

The dishwasher will not switch itself off whilst a programme is running or if there is a fault.

Switching off the dishwasher

- Open the door.
- The dishwasher can be switched off at any time using the ⏻ button.

Switching the dishwasher off during a programme stops the programme.

You can also do this to stop an ongoing timer.

⚠ Risk of damage from leaking water.

Water leakage can cause damage.

If the dishwasher is not going to be used for a longer period of time, e.g. whilst on holiday, the stopcock should be closed as a precaution.

Unloading the dishwasher

Dishes tend to break and chip more easily when they are hot. Allow the dishes to cool until they are comfortable enough to handle before unloading them.

If you open the door fully after switching off, the dishes will cool much faster.

- First unload the lower basket, then the upper basket and finally the 3D MultiFlex tray (if present).
  This will prevent water drops from the upper basket and 3D MultiFlex tray from falling onto the dishes in the lower basket.

Interrupting a programme

A programme will be interrupted as soon as the door is opened.
If the door is closed again, the programme will continue from the point it was at before the door was opened.

⚠ Risk of scalding due to hot water.
During operation, water in the dishwasher may be very hot.
During operation, only open the door with extreme caution.

Cancelling or changing a programme

If a programme is cancelled, important programme stages may be missed.
A programme should only be cancelled in the first few minutes of the programme cycle.

If a programme has already started and you wish to cancel it, proceed as follows:

- Open the door.
- Switch the dishwasher off with the ⏻ button.

If you would like to select another programme:

- Switch the dishwasher on again with the ⏻ button.
- If you have dispensed detergent manually, check whether the detergent compartment is still closed.
  If the lid is already open, fill it with detergent again and close the lid.
- Select the programme you want, and then start it by shutting the door.

Timer ◷

You can set the start time of a programme. The programme start time can be delayed for between 30 minutes and 24 hours.
With start time delays between 30 minutes and 3 hours, the delay can be set in 30 minute stages. It is set in hours for periods longer than this.

With manual detergent dispensing, the detergent will clump together if the detergent compartment is not dry and this may mean it is not fully rinsed out.
When using the timer function, make sure that the detergent compartment is dry before adding detergent. Wipe dry with a cloth first, if necessary.
Do not use any liquid detergents. These can leak out.

⚠ Danger to health due to detergent.
To prevent children coming into contact with dishwasher detergent:
Do not fill the detergent dispenser **until just before starting the programme**, i.e. before you activate the timer.

Activating the timer

- Open the door.
- Switch the dishwasher on with the ⏻ button.
- Select the programme you want to use.
- Press the ◷ *Timer* button.

The ◷ *Timer* indicator light will light up.

- Set the required time after which the programme should start automatically using the ◷ button.

If the ◷ button is pressed and held, the time will increase automatically up to 24 hours. To start again with 0:30 hours, press the ◷ button twice.

- Close the door.

After you have activated the timer, all the displays will switch off after a few minutes to save energy.

Press the ⏻ button to switch the time display back on again for a few minutes.

- Open the door if you need to check how long the timer has left to run.

The time up until the programme starts will show counting down in the display in hours for durations above 10 hours, and in minutes for durations below this.

At the end of the delay period, the programme selected begins automatically. The time left will appear in the time display and the ◷ *Timer* indicator light will go out.

Starting a programme before the time for the timer has elapsed:

A programme can be started before the time for the timer has elapsed.
Proceed as follows:

- Open the door.
- Switch the dishwasher off with the ⏻ button.
- Switch the dishwasher on again with the ⏻ button.
- Select the programme you want.
- Start the programme by closing the door.

Guide for selecting a programme

Crockery	Food deposits	Programme features
Temperature-sensitive dishes, glasses and plastics	Lightly dried-on normal food deposits	Programme with glass care
Mixed crockery	All normal food deposits	Variable, sensor-controlled programme
	Lightly dried-on normal food deposits	Short programme taking less than an hour
	Standard dried-on normal food deposits	Water and energy saving programme
Pots, pans, everyday crockery and cutlery	Stubborn dried-on, burnt-on food deposits containing starch or protein[1]	Maximum cleaning performance
No crockery	Residual salt after refilling the salt container	Flushes out salt residues

[1] Food such as potatoes, pasta, rice or stews can leave starchy deposits. Deposits containing protein can be left by food such as fried meat or fish.

Programme[2]	Consumption estimate[3]
Gentle 45 °C	Energy consumption Water consumption Programme duration
Auto 45–65 °C	Energy consumption Water consumption Programme duration
QuickPowerWash 65 °C	Energy consumption Water consumption Programme duration
ECO	Energy consumption Water consumption Programme duration
Intensive 75 °C	Energy consumption Water consumption Programme duration
QuickPowerWash 65 °C + Express	Programme duration 13 minutes, no heating up, solely for flushing out salt.

[2] The programmes can be combined with the “Express”, “Extra clean”, “Extra dry” or “Second interim rinse” (if available) programme options (see “Programme options”).

[3] The estimated values may change due to the selected settings or programme options, or the conditions in which the appliance is being used.

Programme overview

Programme	Programme sequence				
	Pre-wash	Main wash °C	Interim rinse	Final rinse °C	Drying/ AutoOpen
ECO[1]	-	51	✓	42	✓ / ✓
Auto 45–65 °C	Variable programme sequence, sensor-controlled adjustment according to load size and level of soiling				
	As required	45–65	As required	55–70	✓ / ✓
Gentle 45 °C	✓	45	✓	55–70	✓ / ✓
QuickPowerWash 65 °C	-	65	✓	60	✓ / ✓
Intensive 75 °C	✓	75	✓	55–70	✓

[1] This programme is the most efficient in terms of its combined energy and water consumption for cleaning normally soiled crockery.

Consumption[2]				
Electrical energy		Water	Time	
Cold water 15 °C kWh	Hot water 60 °C kWh	Litres	Cold water 15 °C h:min	Hot water 60 °C h:min
0.64/0.63[3]	0.40/0.39[3]	8.4	3:19[3]	3:05
0.75–1.05[4,5]	0.55–0.75[4,5]	6.0–13.0[4,5]	2:02–3:07	1:54–2:51
0.85	0.45	13.0	2:38	2:23
1.10	0.75	10.5	0:58	0:58
1.30	0.85	13.5	3:10	2:48

[2] Values for the *ECO* programme were calculated under standardised testing conditions. Values for the remaining programmes were calculated under comparable testing conditions.
In practice, the selected settings, programme options or use conditions may result in different values.

[3] Dishwashers with cutlery tray/cutlery basket

[4] Minimum value: half load with light soiling

[5] Maximum value: full load with heavy soiling

Express ◔

The ◔ *Express* programme option reduces the programme running time.

In order to achieve optimum cleaning results, the temperature, and therefore the energy consumption, will increase with this option.

The time by which the programme running time is shortened varies according to the selected programme.

Selecting the ◔ *Express* programme option may take precedence over other selected options.

When used in combination with the *QuickPowerWash* programme, the ◔ *Express* option results in a rinse cycle designed solely for the purpose of flushing out the cabinet to remove salt solution that leaked out after refilling the salt reservoir.

- Open the door.
- Switch the dishwasher on with the ⏻ button.

The indicator light for the programme selected will flash.

- Select a different programme if required.
- Press the ◔ *Express* button.

The ◔ *Express* indicator light will come on if the programme option is available for the programme selected.

- Start the programme by closing the door.

The selected programme option will remain active for that particular programme until the setting is changed (except for the *ECO* programme).

Buzzers

A buzzer sequence will sound at the end of the programme or if there is a fault.

The buzzers at the end of the programme and the alarm tone in the event of a fault will sound 4 times at intervals with a short pause between each set.

You can activate or deactivate the buzzer that sounds at the end of the programme if you wish.
The alarm tone that sounds when there is a fault cannot be deactivated.

- Open the door.
- Switch the dishwasher off with the ⏻ button, if it is switched on.
- Press the ◔ button in and, **whilst holding it in**, switch the dishwasher on using the ⏻ button.
  Keep the ◔ button pressed in for at least 4 seconds until the ◔ indicator light comes on.

If this does not happen, start the procedure from the beginning again.

- Press the ∨ programme selection button 4 times.

The top left programme indicator light will flash rapidly 4 times at intervals.

The flashing sequence in the time display indicates whether the buzzers at the end of the programme are activated or deactivated:

- *P 1*: buzzers are activated.
- *P 0*: buzzers are deactivated.

- Press the ◔ button to change the setting.

The setting is now saved.

- Switch the dishwasher off with the ⏻ button.

AutoOpen

In some programmes, the door automatically opens slightly to assist the drying process.

This programme option can be deactivated if you wish.

- Open the door.
- Switch the dishwasher off with the ⏻ button, if it is switched on.
- Press the ◔ button in and, **whilst holding it in**, switch the dishwasher on using the ⏻ button.
  Keep the ◔ button pressed in for at least 4 seconds until the ◔ indicator light comes on.

If this does not happen, start the procedure from the beginning again.

- Press the ∨ programme selection button 7 times.

The top left indicator light will flash rapidly 7 times at intervals.

The flashing sequence in the display indicates whether the AutoOpen programme option is activated or not:

- *P 1*: AutoOpen is activated
- *P 0*: AutoOpen is deactivated

- Press the ◔ button to change the setting.

The setting is now saved.

- Switch the dishwasher off with the ⏻ button.

⚠ Risk of damage due to steam.
Steam from the dishwasher could damage the edges of delicate worktops when you open the door at the end of the programme if the fan is no longer running.
If you have deactivated the automatic door opening function but would still like to open the door at the end of the programme, then make sure that you open the door fully.

Switching off the refill reminders

If you only ever use combination detergent products containing salt and rinse aid in your dishwasher, you can switch off both refill reminders if you wish.

- Open the door.
- Switch the dishwasher off with the ⏻ button, if it is switched on.
- Press the ◔ button in and, **whilst holding it in**, switch the dishwasher on using the ⏻ button.
  Keep the ◔ button pressed in for at least 4 seconds until the ◔ indicator light comes on.

If this does not happen, start the procedure from the beginning again.

- Press the ∨ programme selection button 9 times.

The top left programme indicator light will flash rapidly 9 times at intervals.

The flashing sequence in the display indicates whether the refill reminders have been activated or not:

- *P 1*: Refill reminders activated
- *P 0*: Refill reminders deactivated

- Press the ◔ button to change the setting.

The setting is now saved.

- Switch the dishwasher off with the ⏻ button.

Please make sure that if you stop using combination detergents, you refill the dishwasher salt and rinse aid. Switch the refill reminders back on.

Extra clean

You can choose this programme option to increase the cleaning performance of the programmes.

If you activate this programme option, the programme running times and the main wash temperatures will increase. The water and energy consumption may increase.

- Open the door.
- Switch the dishwasher off with the ⏻ button, if it is switched on.
- Press the ◔ button in and, **whilst holding it in**, switch the dishwasher on using the ⏻ button.
  Keep the ◔ button pressed in for at least 4 seconds until the ◔ indicator light comes on.

If this does not happen, start the procedure from the beginning again.

- Press the ∨ programme selector 10 times.

The top left programme indicator light will emit 1 long flash at intervals.

The flashing sequence in the time display indicates whether the Extra clean programme option is activated or not:

- *P 1*: Extra clean is activated
- *P 0*: Extra clean is deactivated

- Press the ◔ button to change the setting.

The setting is now saved.

If the programme function has been switched on, it will remain active for all programmes until it is switched off again (except for the ECO programme).

- Switch the dishwasher off with the ⏻ button.

Extra dry

You can select this programme option in order to increase the programme drying performance.

If you activate this programme option, the programme running times and final rinse temperatures will increase. The energy consumption may increase.

- Open the door.
- Switch the dishwasher off with the ⏻ button, if it is switched on.
- Press the ◔ button in and, **whilst holding it in**, switch the dishwasher on using the ⏻ button.
  Keep the ◔ button pressed in for at least 4 seconds until the ◔ indicator light comes on.

If this does not happen, start the procedure from the beginning again.

- Press the ∨ programme selector 11 times.

The top left programme indicator light will emit 1 long flash and 1 short flash at intervals.

The flashing sequence in the time display indicates whether the Extra dry programme option is activated or not:

- *P 1*: Extra dry is activated
- *P 0*: Extra dry is deactivated

- Press the ◔ button to change the setting.

The setting is now saved.

If the programme function has been switched on, it will remain active for all programmes until it is switched off again (except for the ECO programme).

- Switch the dishwasher off with the ⏻ button.

2nd interim rinse

You can choose this programme operation to increase the cleaning performance of the programmes with a second interim rinse.

If you activate this programme option, the programme running times and the water consumption will increase.

- Open the door.
- Switch the dishwasher off with the ⏻ button, if it is switched on.
- Press the ◔ button in and, **whilst holding it in**, switch the dishwasher on using the ⏻ button.
  Keep the ◔ button pressed in for at least 4 seconds until the ◔ indicator light comes on.

If this does not happen, start the procedure from the beginning again.

- Press the ∨ programme selector 12 times.

The top left programme indicator light will emit 1 long flash and 2 short flashes at intervals.

The flashing sequence in the time display indicates whether the “2nd interim rinse” programme option is activated or not:

- *P 1*: “2nd interim rinse” is activated
- *P 0*: “2nd interim rinse” is deactivated

- Press the ◔ button to change the setting.

The setting is now saved.

If the programme function has been switched on, it will remain active for all programmes until it is switched off again (except for the ECO programme).

- Switch the dishwasher off with the ⏻ button.

Operating hours display

You can display how many hours the dishwasher has been in operation so far.

- Open the door.
- Switch the dishwasher off with the ⏻ button, if it is switched on.
- Press the ⏲ button in and, **whilst holding it in**, switch the dishwasher on using the ⏻ button.
  Keep the ⏲ button pressed in for at least 4 seconds until the ⏲ indicator light comes on.

If this does not happen, start the procedure from the beginning again.

The flashing sequence in the time display indicates the operating hours after the *H*.

- Switch the dishwasher off with the ⏻ button.

Factory defaults

If you have altered any settings, you can reset them back to the factory default settings.

- Open the door.
- Switch the dishwasher off with the ⏻ button, if it is switched on.
- Press the ◔ button in and, **whilst holding it in**, switch the dishwasher on using the ⏻ button.
  Keep the ◔ button pressed in for at least 4 seconds until the ◔ indicator light comes on.

If this does not happen, start the procedure from the beginning again.

- Press the ∨ programme selection button 19 times.

The top left programme indicator light will flash slowly once and rapidly 9 times at intervals.

The flashing sequence in the time display indicates whether a setting deviates from the factory default:

- *P 1*: all values are factory default settings.
- *P 0*: at least one setting has been changed.

- To reset the dishwasher to the factory default settings, press the ◔ button.

The setting is now saved.

- Switch the dishwasher off with the ⏻ button.

Check the condition of your dishwasher regularly (approx. every 4–6 months). In this way, faults and problems can be avoided.

⚠ Damage due to unsuitable cleaning agents.

All surfaces are susceptible to scratching. Contact with unsuitable cleaning agents can alter or discolour the external surfaces.

Only use cleaning agents formulated for use on the relevant surfaces.

Cleaning the wash cabinet

The wash cabinet is largely self-cleaning, provided that the correct amount of detergent is always used.

If, despite this, limescale or grease deposits build up in the cabinet, these can be removed with a proprietary dishwasher cleaner (available from the Miele Customer Service Department or the Miele webshop). Follow the instructions on the product packaging.

The frequent use of low-temperature wash programmes (< 50 °C) increases the risk of contamination and odours inside the wash cabinet. Run the *Intensive 75 °C* programme once per month to clean the wash cabinet and prevent odours from developing.

- Clean the filters in the wash cabinet regularly.

Cleaning the door and the door seal

The door seal and the sides of the dishwasher door cannot be reached and cleaned by the spray arm jets. As a result, mould can develop here.

- Wipe the door seals regularly with a damp cloth to remove food deposits.
- Wipe off any food or drink residues that may have dripped onto the sides of dishwasher door.

Cleaning the control field

- The control field should **only** be wiped with a clean, damp cloth.

Cleaning the appliance front

⚠ Damage due to soiling.
Soiling that is left too long might become impossible to remove and could cause the external surfaces to alter or discolour.
It is therefore best to remove any soiling immediately.

- Clean the appliance front with a soft sponge cloth and a solution of warm water and washing-up liquid. After cleaning, wipe the surfaces dry using a soft cloth.
  A clean, damp microfibre cloth without dishwasher detergent can also be used.

To avoid damaging the external surfaces, do not use the following:

- Cleaning agents containing soda, ammonia, acids or chlorides
- Descaling agents
- Abrasive cleaning agents, e.g. scouring powder, scouring liquid, or pumice stones
- Cleaning agents containing solvents
- Stainless steel cleaners
- Dishwasher cleaners
- Oven cleaner
- Glass cleaning agents
- Hard, abrasive brushes, cloths or sponges, e.g. pot scourers, brushes or sponges that have been previously used with abrasive cleaning agents
- Eraser stain remover blocks
- Sharp metal scrapers
- Wire wool
- Steam cleaners

Cleaning the spray arms

Particles of food can get stuck in the spray arm nozzles and bearings. The spray arms should therefore be inspected regularly (approx. every 2–4 months).

Never run a wash programme without using the spray arms.

⚠ Damage due to soiling entering the circulation system.
Without filters, soiling can enter the circulation system and cause a blockage.
Do not run a wash programme without the lower spray arm or without the filters.
When cleaning the filters and spray arms, make sure that coarse soiling cannot get into the circulation system.

- Switch the dishwasher off.

Removing the cutlery tray (if present)

In order to be able to remove the upper spray arm, you first have to remove the cutlery tray (if present).

- Take out the cutlery tray.

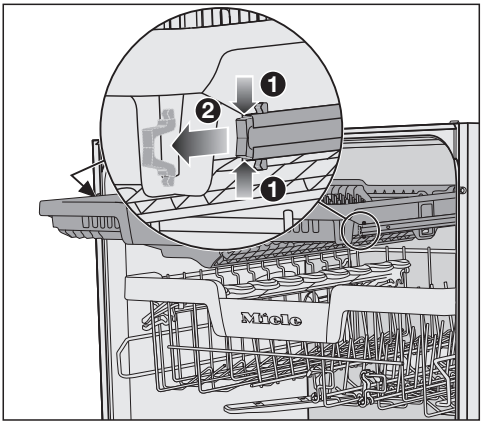

- Press the rail safety clips on both sides of the cutlery tray together ❶ and remove the safety clips ❷ at the same time.
- Take out the cutlery tray completely.

Removing the top spray arm

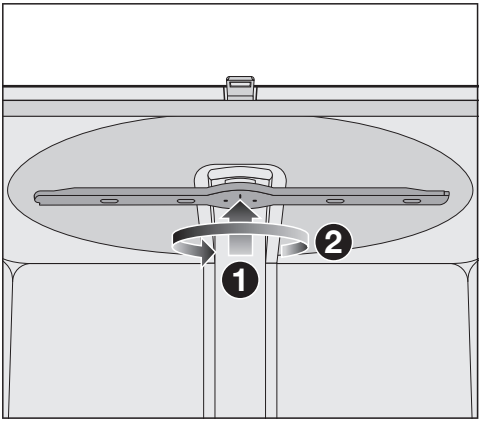

- Push the upper spray arm upwards ❶ to engage the inner ratchet. Then unscrew the spray arm by rotating the screw thread anti-clockwise ❷ (view from below).

Removing the middle spray arm

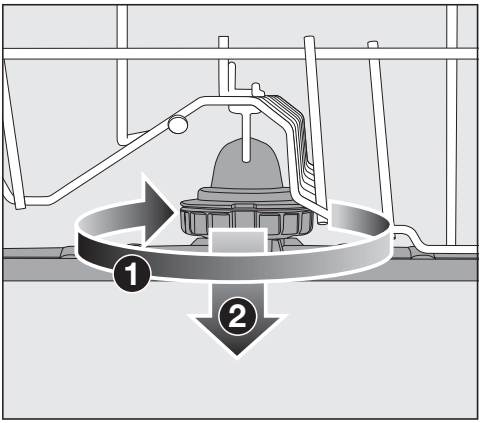

- Rotate the screw thread of the middle spray arm clockwise ❶ (view from above) and remove the spray arm ❷.

Removing the lower spray arm

- Remove the lower basket.

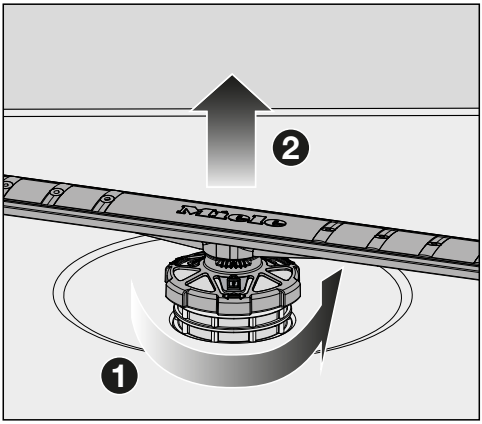

- Rotate the screw thread of the lower spray arm anti-clockwise ❶ (view from above) and pull the spray arm upwards to remove ❷.

Cleaning the spray arms

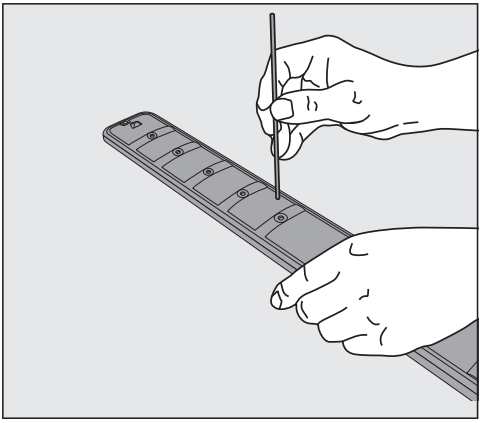

- Use a pointed object to push food particles into the spray arm nozzles.
- Rinse the spray arm thoroughly under running water.

Inserting the upper spray arm

- Refit the upper spray arm and tighten it by hand.

Inserting the middle spray arm

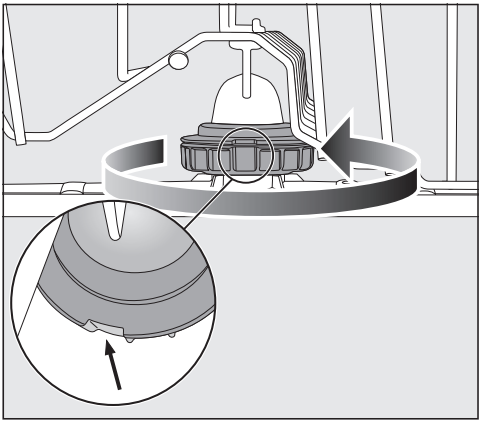

- Replace the middle spray arm and turn the screw thread anti-clockwise (view from above) until it engages. Make sure that the recesses in the lock line up.

Inserting the lower spray arm

- Refit the lower spray arm and ensure that the filter combination lies flat in the base of the wash cabinet.

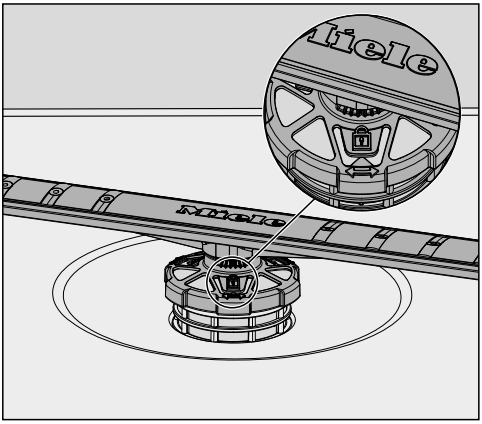

- Rotate the screw thread of the lower spray arm clockwise (view from above) until the arrow in the viewing window points to the lock symbol 🔒.
- Make sure the spray arms can rotate freely.

⚠ Damage due to soiling entering the circulation system.
The lower spray arm is used to secure the filter combination. Without filters, coarse soiling can enter the circulation system and cause a blockage.
Do not run a wash programme without the lower spray arm or without the filters.

Inserting the cutlery tray (if present)

- Slide the cutlery tray back onto the rails from the front.
- Replace the safety clips in the rails on both sides of the cutlery tray.

Checking the filters in the wash cabinet

The filter combination in the base of the wash cabinet retains coarse soiling from the suds solution. This prevents soiling getting into the circulation system and re-entering the wash cabinet through the spray arms.

⚠ Damage due to soiling entering the circulation system.
Without filters, soiling can enter the circulation system and cause a blockage.
Do not run a wash programme without the lower spray arm or without the filters.
When cleaning the filters and spray arms, make sure that coarse soiling cannot get into the circulation system.

The filters can become blocked by soiling that collects over time. The level of soiling and time it takes before the filters need cleaning will vary depending on use.

- Monitor the condition of the filter combination regularly and clean it if necessary.

Cleaning the filters

- Switch the dishwasher off.
- Remove the lower spray arm (see “Cleaning and care” chapter, “Cleaning the spray arms” section).
- Before removing the filter combination, remove any coarse soiling to prevent it from entering the circulation system.

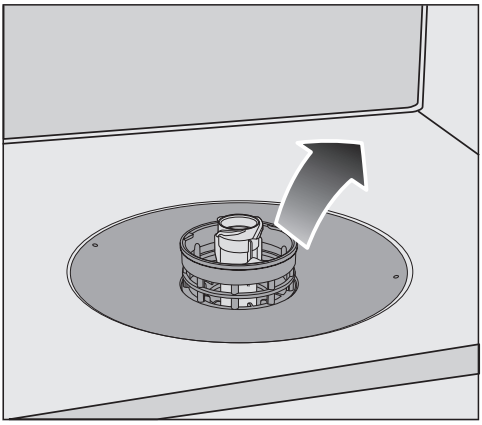

- Remove the filter combination.

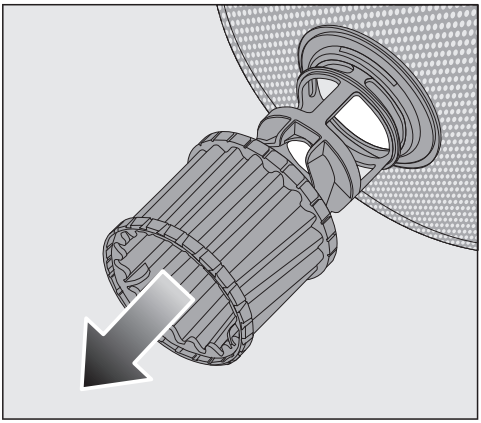

- In order to clean the inside of the filter, pull the microfilter on the plastic ring downwards and away from the filter combination.
- Rinse all the parts under running water.
  If necessary, use a soft cleaning brush to remove soiling.
- Insert the microfilter back into the filter combination.
- Refit the filter combination so that it lies flat in the base of the wash cabinet.
- Refit the lower spray arm to the filter combination using the screw connection.

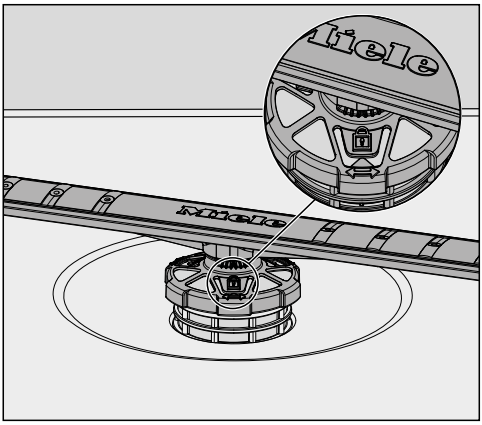

- Rotate the screw connection clockwise until the arrow in the viewing window points to the lock symbol 🔒.

⚠ Damage due to soiling entering the circulation system.
The lower spray arm is used to secure the filter combination. Without filters, coarse soiling can enter the circulation system and cause a blockage.
Do not run a wash programme without the lower spray arm or without the filters.

Cleaning the water inlet filter

A filter is incorporated in the screw thread to protect the water intake valve. If the filter is soiled, insufficient water flows into the wash cabinet.

⚠ Risk of electric shock from mains voltage.
The plastic housing of the water connection contains an electrical valve.
The housing must not be immersed in liquids.

- Disconnect the dishwasher from the mains.
  To do this, switch off the dishwasher and then unplug the mains plug.
- Close the stopcock.
- Unscrew the water intake valve.

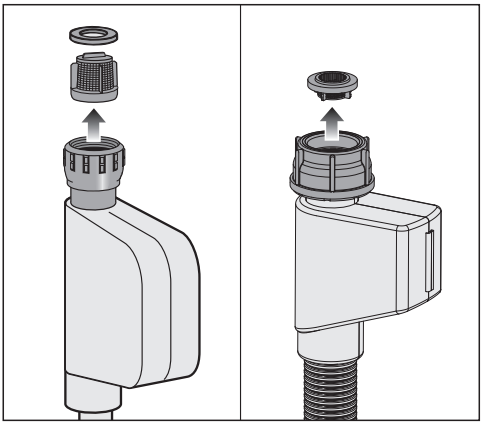

- Remove the filter and the sealing washer from the screw connection. You can use a suitable pair of pliers to help you with this.
- Rinse the filter under running water.
- Reassemble in reverse order.

Screw the screw thread securely back onto the stopcock. Slowly turn on the stopcock. If water drips out, tighten the connection.

The filter **must** be refitted after cleaning.

Cleaning the drain pump

If water remains in the wash cabinet after the end of the programme, the water has not been pumped away. The drain pump may be blocked by foreign objects. These foreign objects are easy to remove.

- Disconnect the dishwasher from the mains.
  To do this, switch off the dishwasher and then unplug the mains plug.
- Take the filter combination out of the wash cabinet (see “Cleaning and care – Cleaning the filters”).
- Scoop the water out of the wash cabinet using a small container.

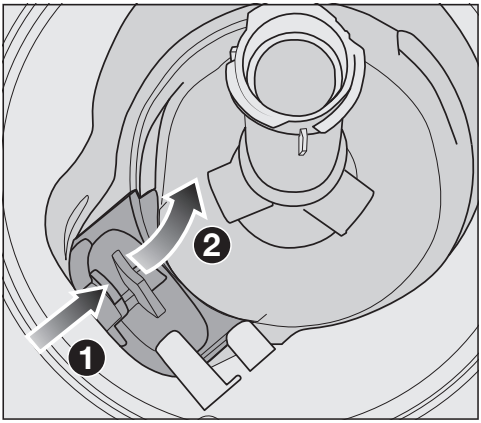

- Press the catch of the drain pump cover inwards ❶.
- Tip the cover inwards until it is released ❷.
- Rinse the cover thoroughly under running water and remove all foreign objects.

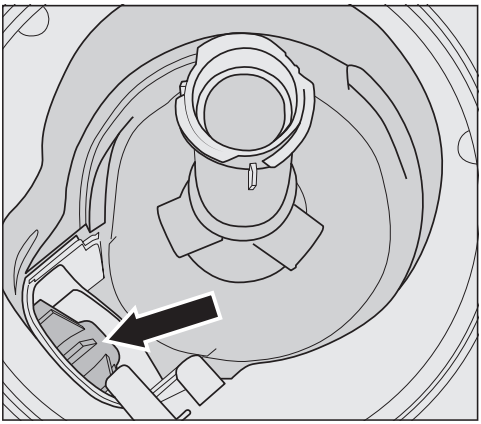

The drain pump (see arrow) is underneath the cover.

⚠ Risk of injury from glass splinters.
It is especially difficult to see glass splinters in the drain pump.
Take care when cleaning the drain pump.

- Carefully remove all foreign objects from the drain pump. Check the drain pump impeller by manually turning it. You will feel a little resistance when you turn the impeller.
- Refit the cover by placing it down vertically from above.

Ensure that the catch engages correctly.

⚠ Damage due to incorrect cleaning.
The components are delicate and can be damaged during cleaning.
Take care when cleaning the drain pump.

Many malfunctions and faults that can occur in daily operation can be easily remedied. You can save time and money in many cases, as you do not need to call the Miele Customer Service Department.

Information to help you rectify faults yourself can be found at www.miele.com/service.

The following tables are designed to help you to find the cause of a malfunction or a fault and to resolve it.

This section only lists faults that you can remedy yourself. All other faults are shown in ⚠ Fault FXX.

Technical problems

Problem	Cause and remedy
The dishwasher will not start.	The door is not closed properly. ■ Raise the door upwards until the catch engages.
	The dishwasher is not plugged in. ■ Insert the plug and switch on at the socket.
	The mains fuse has tripped. ■ Reset the trip switch in the fuse box or replace the fuse in the plug (see data plate for minimum fuse rating). ■ If the mains fuse trips again, contact the Miele Customer Service Department.
	The dishwasher is not switched on. ■ Switch the dishwasher on with the ⏻ button.
The ⏻ button does not respond immediately or only responds once it has been pressed several times.	Energy management: the door was opened or closed shortly before the ⏻ button was pressed. As a result, the dishwasher was already switched on. The electronic module requires a few seconds to be ready for operation. ■ Wait a few seconds after opening or closing the door. ■ Then press the ⏻ button.
The dishwasher stops during a programme.	The mains fuse has tripped. The display is dark and the dishwasher cannot be switched on. ■ Reset the circuit breaker (see data plate for minimum protection rating). ■ If the mains fuse trips again, please contact Miele Customer Service or a qualified specialist.

Fault messages

Problem	Cause and remedy
The alarm tone is sounding. **Fault number** *FXX* **appears in the time display.**	There may be a technical fault. ■ Switch the dishwasher off with the ⏻ button. ■ Switch the dishwasher back on after a few seconds. ■ Select the programme you want to use. ■ Close the door. If the indicator lights flash again, there is a technical fault. ■ Switch the dishwasher off. ■ Close the stopcock. ■ Call the Miele Customer Service Department.
Fault *F70*: **The drain pump may still be running, even with the door open.**	The Waterproof system has reacted. ■ Switch the dishwasher off. ■ Close the stopcock. ■ Call the Miele Customer Service Department.
The alarm tone is sounding. **When the door is open, all of the programme selection indicator lights are flashing.** **Fault number** *F78* **appears in the time display.**	Circulation pump fault. ■ Switch the dishwasher off. ■ Switch the dishwasher back on. ■ Select the programme you want to use. ■ Close the door. If the fault message appears again, there is a technical fault. ■ Switch the dishwasher off. ■ Close the stopcock. ■ Call the Miele Customer Service Department.

Door release

Problem	Cause and remedy
The alarm tone is sounding. **Fault number F33 appears in the time display.**	The door does not open automatically. There may be a technical fault. ■ Switch the dishwasher off. ■ Open the door manually (see “Before using for the first time – Opening the door”) and switch the dishwasher back on again. ■ If the same fault message appears again, call the Miele Customer Service Department.
	The door locking pins do not retract after the door is opened. There may be a technical fault. ■ Switch the dishwasher back on. ■ If the same fault message appears again, call the Miele Customer Service Department.

Water inlet fault

Problem	Cause and remedy
The dishwasher stops working shortly after the programme starts. **The alarm tone is sounding.** **The ⇆/⇩ indicator light flashes on and off.** **F and 173 appear alternately on the time display.**	The stopcock is closed. ■ Open the stopcock fully.

Problem solving guide

Problem	Cause and remedy
The dishwasher stops during a programme. The alarm tone is sounding. The ⛶/⛶ indicator light is flashing. The fault number F12 or F13 appears in the time display.	Before rectifying the problem: ■ Switch the dishwasher off with the ⏻ button.
	There is a water inlet fault. ■ Open the stopcock fully and start the programme again. ■ Clean the filter in the water inlet (see the “Cleaning and care – Cleaning the water inlet filter”). ■ The water connection pressure is lower than 50 kPa. Seek professional advice. ■ The on-site connection for the water drainage may be too low and you will need to vent the water drainage (see “Installation – Water drainage”). If the fault message is displayed again, there may be a technical fault with the flowmeter. ■ Call the Miele Customer Service Department.
The dishwasher stops during a programme. Fault number F18 appears in the time display.	A technical fault has occurred. ■ Switch the dishwasher off. ■ Close the stopcock. ■ Call the Miele Customer Service Department.

Water drainage fault

Problem	Cause and remedy
The dishwasher stops during a programme. The alarm tone is sounding. The ⛶/⛶ indicator light is flashing. Fault number F11 appears in the time display.	Before rectifying the problem: ■ Switch the dishwasher off.
	Water drainage fault. There might be water in the wash cabinet. ■ Clean the filter combination (see “Cleaning and care – Cleaning the filters”). ■ Clean the drain pump (see “Cleaning and care – Cleaning the drain pump”). ■ Remove any kinks or loops in the drain hose.

General problems with the dishwasher

Problem	Cause and remedy
The indicator lights and display are dark.	The dishwasher has switched off automatically to save energy. ■ Switch the dishwasher on again with the ⏻ button.

Problem	Cause and remedy
Detergent residue is left in the detergent compartment at the end of a programme.	The detergent compartment was still damp when detergent was added. ■ Only add the detergent when the detergent compartment is dry.
The detergent compartment lid cannot be closed.	Residual detergent is blocking the catch. ■ Remove the residual detergent.
At the end of a programme there is a film of moisture on the inside of the door and possibly on the interior cabinet walls.	This is part of the normal function of the drying system. The moisture will dissipate after a short while.
Water remains in the wash cabinet at the end of a programme.	Before rectifying the problem: ■ Switch the dishwasher off.
	The filter combination in the wash cabinet is clogged. ■ Clean the filter combination (see “Cleaning and care” chapter, “Cleaning the filters” section).
	The drain pump is blocked. ■ Clean the drain pump (see “Cleaning and care” chapter, “Cleaning the drain pump” section).
	The drain hose is kinked. ■ Remove any kinks from the drain hose.
Build-up of odours in the wash cabinet	The frequent use of low-temperature wash programmes (< 50 °C) increases the risk of contamination and odours inside the wash cabinet. ■ Regularly run a high-temperature programme. This is to prevent the build-up of residues and odours.

Noises

Problem	Cause and remedy
Knocking noise in the wash cabinet	A spray arm is knocking against a wash item. ■ Carefully open the door and rearrange the wash items that are obstructing the spray arm.

Problem	Cause and remedy
Rattling noise in the wash cabinet	Wash items are insecure in the wash cabinet. ■ Carefully open the door and rearrange the wash items so that they sit securely.
	There is a foreign object (e.g. glass shard) in the drain pump. ■ Remove the foreign object from the drain pump (see “Cleaning and care” chapter, “Cleaning the drain pump” section).
Knocking noise in the water pipes	This may be caused by the on-site installation or the cross-section of the piping. ■ However, this will not affect the functioning of the dishwasher in any way. If in doubt, contact a suitably qualified plumber.

Unsatisfactory washing result

Problem	Cause and remedy
The wash items are not clean.	The wash items were not loaded correctly. ■ See notes in the “Loading the dishwasher” chapter.
	The programme was not powerful enough. ■ Select a more powerful programme (see “Programme overview” chapter). ■ Activate the Extra clean function (see “Programme options – Extra clean”). ■ Activate the “Second interim rinse” function (see “Programme options – Second interim rinse”).
	Not enough detergent was dispensed during manual detergent dispensing. ■ Use more detergent or change the detergent you are using.
	Items are blocking the path of the spray arms. ■ Carry out a rotation check and if needed rearrange the items so that the spray arms can rotate freely.
	The filter combination in the wash cabinet is not clean or was incorrectly fitted. This may have caused the spray arm jets to become blocked. ■ Clean and/or fit the filter combination correctly. ■ Clean the spray arm jets if necessary (see “Cleaning and care” chapter, “Cleaning the spray arms” section).
There are smears on glassware and cutlery. There is a bluish sheen on the surface of glassware. The film can be wiped off.	The rinse aid dosage is set too high. ■ Reduce the dosage (see “Before using for the first time – Rinse aid”).

Problem solving guide

Problem	Cause and remedy
The crockery is not dry or cutlery and glasses are flecked.	The rinse aid dosage is too low or the rinse aid container is empty. ■ Replenish the rinse aid container, increase the dosage or change the brand of rinse aid (see “Before using for the first time – Rinse aid”).
	The crockery was taken out of the wash cabinet too soon. ■ Leave the crockery in longer (see “Operation – Unloading the dishwasher”).
	The duration of the drying phase for the selected programme is not sufficient for the crockery. ■ Select the Extra dry programme option if available (see “Programme options – Extra dry”).
	You have used combination products that have insufficient drying performance. ■ Switch to another detergent, or replenish the rinse aid (see “Before using for the first time – Rinse aid”).
Glassware has a brown or blue tinge. The film cannot be wiped off.	Ingredients from the detergent have formed a deposit. ■ Switch to another detergent straight away.
Glassware is dull and discoloured. The film cannot be wiped off.	The glassware is not dishwasher-proof. The surface has altered. ■ No remedy. Purchase glassware that is dishwasher-proof.
Tea or lipstick stains have not been completely removed.	The wash temperature of the selected programme was too low. ■ Select a programme with a higher main wash temperature.
	The bleaching effect of the detergent used is too low. ■ Switch to another detergent.
Plastic items are discoloured.	Natural dyes, e.g. from carrots, tomatoes or ketchup may be the cause. The amount of detergent used or its bleaching effect was not sufficient to deal with natural dyes. ■ Use more detergent (see “Detergent”). Parts that are already discoloured will not revert to their original colour.

Problem	Cause and remedy
White residue is visible on the crockery. Clouding has occurred on glassware and cutlery. The film can be wiped off.	The rinse aid dosage is set too low. ■ Increase the dosage (see “Before using for the first time – Rinse aid”).
	There is no salt in the salt reservoir. ■ Fill the salt reservoir (see “Before using for the first time – Dishwasher salt”).
	The salt reservoir cap has not been screwed on correctly. ■ Replace the cap, making sure that it screws back on correctly.
	Unsuitable combination detergents were used. ■ Switch to another detergent. If using tabs or powder detergent, do not choose combination products and ensure you refill the dishwasher salt and rinse aid.
	The water softener is programmed to too low a water hardness level. ■ Programme the water softener to a higher water hardness level (see “Before using for the first time – Water softener”).
There are rust stains on cutlery.	The affected items are not corrosion-resistant. ■ No remedy. Purchase cutlery that is dishwasher-safe.
	A programme was not run after dishwasher salt was added. Traces of salt have got into the normal wash cycle. ■ Always run the 65 °C *QuickPowerWash* programme with the *Express* option selected and without any load items in the dishwasher immediately after adding dishwasher salt.
	The salt reservoir cap has not been screwed on correctly. ■ Replace the cap, making sure that it screws back on correctly.

Information to help you rectify faults yourself and about Miele spare parts can be found at www.miele.com/service.

Contact in the event of a fault

In the event of any faults which you cannot remedy yourself, please contact your Miele dealer or the Miele Customer Service Department.

You can book a Miele Customer Service Department call-out online at www.miele.com/service.

Contact information for the Miele Customer Service Department can be found at the end of this document.

Please quote the model identifier and serial number of your appliance (Fabr./SN/Nr.) when contacting the Miele Customer Service Department. This information can be found on the data plate.

Please note that telephone calls may be monitored and recorded for training purposes and that a call-out charge will be applied to service visits where the problem could have been resolved as described in this booklet.

The data plate is located on the right side of the door.

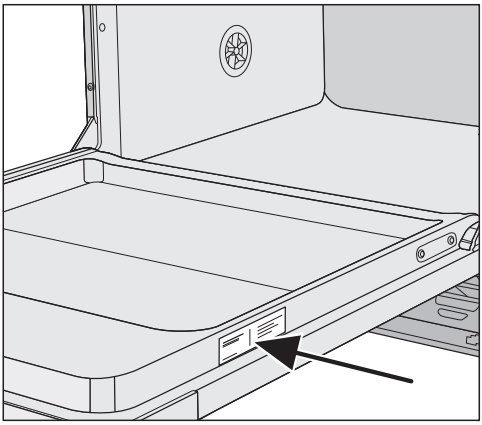

EPREL database

From 1 March 2021, information on energy labelling and ecodesign requirements will be available in the European Product Database (EPREL). You can find the product database at the following link https://eprel.ec.europa.eu/. You will be asked to enter the model identifier.

The model identifier can be found on the data plate.

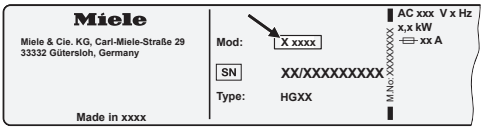

Warranty

For information on the appliance warranty specific to your country please contact Miele. See back cover for address.

In the UK, your appliance warranty is valid for 2 years from the date of purchase. However, you must activate your cover by calling 0330 160 6640 or registering online at www.miele.co.uk.

Note for test institutes

All relevant information for comparison testing is provided in the **“Comparison tests”** booklet.

You can download this booklet from the Miele website. You will find the booklet under “Downloads” on the page for the relevant dishwasher model.

Dishwasher detergent, rinse aid and cleaning and care products are available for this dishwasher, as are optional accessories.
All the products have been designed for Miele appliances.

These and many other products can be ordered from the Miele webshop, the Miele Customer Service Department or your Miele dealer.

Dishwasher detergent, rinse aid and salt

When selecting your Miele dishwasher, you opted for top quality and performance. To achieve optimum results all the time, it is important to use the right dishwasher products. Not all off-the-shelf products deliver the same results in all dishwashers.
For this reason Miele offers dishwasher products specifically designed for Miele appliances.

Detergent tabs

- Sparkling results even with stubborn food deposits
- Combination product with other functions such as rinse aid, dishwasher salt and glass protection additives
- Phoshate free – helps protect the environment
- No need to unwrap thanks to water-soluble wrapping

Powder detergent

- With active oxygen for thorough cleaning
- With enzymes that are effective even at low temperatures
- With glass-protection formula against corrosion

Rinse aid

- For sparkling glasses
- Helps crockery to dry
- With glass-protection formula against corrosion
- Specially designed cap for precise, easy dispensing

Dishwasher salt

- Prevents limescale on crockery and in the appliance
- Extra coarse-grained

Appliance care

Miele cleaning and care products provide optimum care for your Miele dishwasher.

Dishwasher cleaner

- For use with the Maintenance programme without detergent dispensing
- Cleans the dishwasher effectively and thoroughly
- Removes grease, bacteria, and associated unpleasant odours
- Ensures excellent dishwashing results

Descaling agent

- Removes heavy limescale deposits
- Mild and gentle with natural citric acid

Conditioner

- Removes odours, limescale and light deposits
- Maintains the elasticity and leak tightness of the seals

Freshener

- Neutralises unpleasant odours
- Fresh, pleasant fragrance of lime and green tea
- Easy and convenient to attach to the dishwasher basket
- Very economical; lasts for 60 wash cycles

The Miele Waterproof system

Provided that your dishwasher has been installed correctly, the Miele Waterproof system will protect you from water damage throughout its lifetime.

Water inlet

⚠ Health risk due to wash water.
Water in the dishwasher is not drinking water.
Do not drink any water from the dishwasher.

⚠ Health risk and risk of damage due to contaminated incoming water.
The quality of the incoming water must correspond to the drinking water specification of the country in which the dishwasher is being operated.
Connect the dishwasher to a drinking water supply.

The dishwasher may be connected to cold or hot water (up to max. 60 °C) supplies.
If energy-saving water heating sources such as solar energy circulation systems are used, we recommend connecting to the hot water connection. This saves both time and electrical energy costs. Hot water is used in all programmes.

The water inlet hose is approximately 1.5 m long. A 1.5 m long, flexible metal extension hose (tested to 14,000 kPa/ 140 bar) is available as an optional accessory from Miele dealers or the Miele Customer Service Department.

A stopcock with a ¾" threaded union is required for the connection. If a stopcock is not available, only a qualified installer may connect the dishwasher to the drinking water supply.

The water connection pressure must be between 50 and 1,000 kPa. If the water connection pressure is too high, a pressure reducing valve must be fitted.

⚠ Risk of damage from leaking water.

The connection point is subject to water supply pressure. Water leaking from it can cause damage.

You should therefore open the stopcock slowly and check for leaks. Correct the position of the seal and screw thread if appropriate. Check the screw connections regularly to make sure they are still tight.

⚠ Risk of damage due to excessive pressure.

A brief increase in the water pressure can damage components of the dishwasher.

This dishwasher must only be operated when it is connected to a fully vented plumbing system.

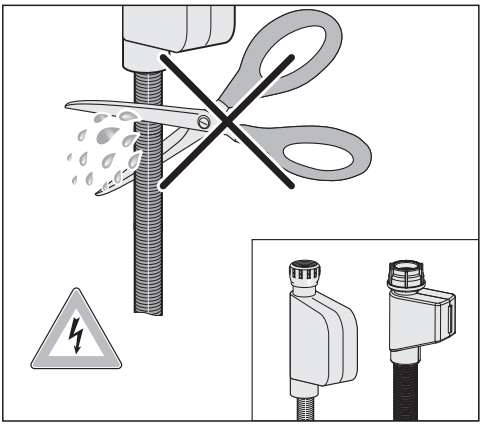

⚠ Risk of electric shock from mains voltage.

There are live electrical components in the water inlet hose.

The water inlet hose must not be shortened or damaged in any way (see illustration).

Water drainage

The dishwasher's drainage system is fitted with a non-return valve, which prevents dirty water from flowing back into the appliance via the drain hose.

The dishwasher is supplied with approx. 1.5 m of flexible drain hose with an internal diameter of 22 mm.

The drain hose can be extended using a connection piece to attach a further length of hose. The drainage length must not be longer than 4 m and the delivery head no higher than 1 m.

If the hose is to be directly fitted to the drainage outlet on site, use the hose clip supplied (see installation plan).

The hose can be directed to the left or the right of the appliance.

The on-site connector for the drain hose can be adapted to different hose diameters. If the connector extends too far into the drain hose, it must be shortened. Otherwise, the drain hose can become blocked.

The drain hose must not be shortened.

Lay the drain hose so that it does not kink and is not being subjected to pressure or tension.

⚠ Risk of damage from leaking water.
Leaking water can cause damage.
After commissioning, make sure that the water is not leaking.

Venting the water drain

If the on-site drainage connection is situated lower than the guide path for the lower basket rollers in the open door, the drainage system must be vented. Otherwise, a siphoning effect can cause the wash cabinet to empty itself of water during a programme.

- Open the dishwasher door fully.

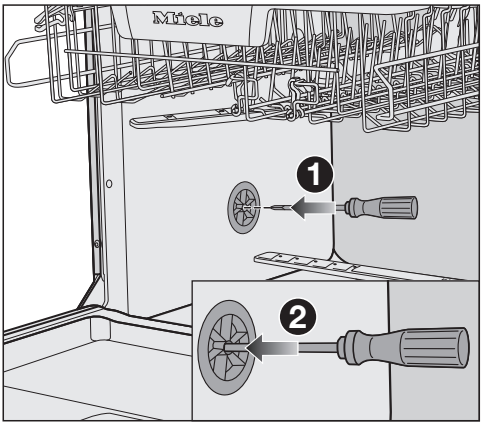

- Remove the lower basket.
- Insert a screwdriver into the middle opening of the vent valve in the left wash cabinet wall ❶.
- Press the screwdriver further into the opening and push it through the membrane ❷ behind.

The vent opening for the water drain is now open.

Electrical connection

The dishwasher is “connector-ready” as standard for connection to an earthed socket.

The socket must be easily accessible after the dishwasher has been installed. If that is not possible, ensure that a suitable means of disconnection is provided on the installation side for each pole.

⚠ Risk of fire from overheating.
Connecting the dishwasher to a multi-socket adapter or to an extension lead can overload the mains connection cable.
For safety reasons, do not use an extension lead or multi-socket adapter.

The electrical installation must comply with VDE 0100 requirements.

For safety reasons, we recommend using a type residual current device (RCD) in the assigned electrical installation for connecting the dishwasher.

If the mains connection cable is damaged, it must only be replaced with a specific mains connection cable of the same type (available from the Miele Customer Service Department). For safety reasons, such replacement may only be carried out by a qualified specialist or the Miele Customer Service Department.

These operating instructions and the data plate indicate the nominal power consumption and the appropriate fuse rating. Compare this information with the data of the on-site electrical connection.
If in any doubt, consult a qualified electrician.

Temporary or permanent operation on an autonomous power supply system or a power supply system that is not synchronised with the mains power supply (e.g. island networks, back-up systems) is possible. A prerequisite for operation is that the power supply system complies with the specifications of EN 50160 or an equivalent standard. The function and operation of the protective measures provided in the domestic electrical installation and in this Miele product must also be maintained in isolated operation or in operation that is not synchronised with the mains power supply, or these measures must be replaced by equivalent measures in the installation. As described, for example, in the current version of BS OHSAS 18001–2 ISO 45001.

Technical data

Technical data

Dishwasher model	Normal	XXL
Height	80.5 cm (adjustable by +6.5 cm)	84.5 cm (adjustable by +6.5 cm)
Height of building-in niche	Min. 80.5 cm (+6.5 cm)	Min. 84.5 cm (+6.5 cm)
Width	59.8 cm	59.8 cm
Width of building-in niche	60 cm	60 cm
Depth	55 cm	55 cm
Weight	Max. 47 kg	Max. 54 kg
Voltage	See data plate	
Rated load	See data plate	
Fuse rating	See data plate	
Test certifications awarded	See data plate	
Water pressure	50–1000 kPa (0.5–10 bar)	50–1000 kPa (0.5–10 bar)
Hot water connection	Up to max. 60 °C	Up to max. 60 °C
Delivery head	Max. 1 m	Max. 1 m
Drainage length	Max. 4 m	Max. 4 m
Mains connection cable	Approx. 1.7 m	Approx. 1.7 m
Capacity	13/14 place settings*	13/14 place settings*

*Depending on model

United Kingdom
Miele Co. Ltd., Fairacres, Marcham Road, Abingdon, Oxon, OX14 1TW
Tel: 0330 160 6600, Internet: www.miele.co.uk, E-mail: info@miele.co.uk

Australia
Miele Australia Pty. Ltd.
ACN 005 635 398
ABN 96 005 635 398
Level 4, 141 Camberwell Road
Hawthorn East, VIC 3123
Tel: 1300 464 353
E-mail: info@miele.com.au
Internet: www.miele.com.au

China Mainland
Miele Electrical Appliances Co. Ltd.
No. 82, Shimenyi Road, JingAn District
Shanghai, China, P.R.C
Post Code: 200040
Phone: +86 21 6157 3500
Fax: +86 21 6157 3511
E-mail: info@miele.cn
Internet: www.miele.cn

Hong Kong, China
Miele (Hong Kong) Ltd.
41/F - 4101, Manhattan Place
23 Wang Tai Road
Kowloon Bay, Hong Kong
Tel: (852) 2610 1025
Fax: (852) 3579 1404
E-mail:
customerservices@miele.com.hk
Website: www.miele.hk

India
Miele India Pvt. Ltd.
1st Floor, Copia Corporate Suites,
Commercial Plot 9, Mathura Road,
Jasola, New Delhi - 110025
E-mail: customercare@miele.in
Website: www.miele.in

Ireland
Miele Ireland Ltd.
2024 Bianconi Avenue
Citywest Business Campus
Dublin 24
Tel: (01) 461 07 10
Fax: (01) 461 07 97
E-mail: info@miele.ie
Internet: www.miele.ie

Malaysia
Miele Sdn Bhd
Suite 12-2, Level 12
Menara Sapura Kencana
Petroleum
Solaris Dutamas No. 1
Jalan Dutamas 1
50480 Kuala Lumpur, Malaysia
Phone: +603-6209-0288
Fax: +603-6205-3768

New Zealand
Miele New Zealand Limited
IRD 98 463 631
8 College Hill
Freemans Bay, Auckland 1011
Tel: 0800 464 353
E-mail: customercare@miele.co.nz
Internet: www.miele.co.nz

Singapore
Miele Pte. Ltd.
29 Media Circle
#11-04 ALICE@Mediapolis
Singapore 138565
Tel: +65 6735 1191
Fax: +65 6735 1161
E-mail: info@miele.com.sg
Internet: www.miele.sg

South Africa
Miele (Pty) Ltd.
63 Peter Place, Bryanston 2194
P.O. Box 69434, Bryanston 2021
Tel: (011) 875 9000
Fax: (011) 875 9035
E-mail: info@miele.co.za
Internet: www.miele.co.za

Thailand
Miele Appliances Ltd.
BHIRAJ TOWER at EmQuartier
43rd Floor Unit 4301-4303
689 Sukhumvit Road
North Klongton Sub-District
Vadhana District
Bangkok 10110, Thailand

United Arab Emirates
Miele Appliances LLC
Showroom 1, Eiffel 1 Building
Sheikh Zayed Road, Umm Al Sheif
P.O. Box 114782 - Dubai
Tel. +971 4 3044 999
Fax. +971 4 3418 852
800-MIELE (64353)
E-mail: info@miele.ae
Website: www.miele.ae

Manufacturer: Miele & Cie. KG, Carl-Miele-Straße 29, 33332 Gütersloh, Germany

Miele

G 5450, G 5452, G 5455, G 5462, G 5467

en-GB

M.-Nr. 12 663 490 / 03