Miele

Operating instructions
Cleaning machine for air regulators and breathing masks

ExpertLine
PLW 8683 Safety AirPro
PLW 8693 Safety AirPro

To avoid the risk of accidents or damage to the appliance, it is **essential** to read these instructions before it is installed and used for the first time.

en-GB

M.-Nr. 13 087 040

Notes about these instructions **7**
Applicable symbols 7
Symbols and conventions used in this document 8
Definition of terms 8

Guide to the appliance **9**
Machine overview PLW 8683 Safety AirPro 9
Control panel PLW 8683 Safety AirPro 10
Machine overview PLW 8693 Safety AirPro 11
Control panel PLW 8693 Safety AirPro 12
Sensor controls on the control panel 13

Appropriate use **14**
General description 14
How it works 14
Purpose 14
Intended user group 14
Installation requirements 14
Contraindications 15
Foreseeable misuse 15

User profiles **16**
Daily operators 16
Administration 16

Safety instructions and warnings **17**
Symbols on the machine 21

Operation **22**
Operation via control panel 22
Display screens 22
Switching on 23
Switching off 24
Standby/Off 24
Touch display 24
Selecting the language 26
System messages ℹ 27
Fault messages ⚠ 27
Help button 27
Networking (ᯤ or L) 28

Commissioning **29**

Opening and closing the door **34**
Pull-open lock 34
Opening the door 34
Closing the door 34
Comfort door lock 35
Opening the door 35
Closing the door 35
Opening the door using the emergency release 36

Water hardness **37**
Water softening 37
Setting the water hardness 37

Contents

Reactivation salt ... 40
Filling the container for reactivation salt ... 40
Salt refill indicator ... 41
Cancelling machine lock due to lack of salt ... 42

Load carrier ... **43**
Selecting a load carrier ... 43
Height-adjustable upper baskets ... 44
Wash pressure measurement ... 46

Areas of application ... **47**
Preparing the load ... 47
Preparing the load items ... 48
Checks before starting a programme ... 49
After reprocessing ... 49
Air regulators ... 50
After reprocessing ... 51
Breathing masks ... 52
After reprocessing ... 52
Carrier frames for compressed air units ... 53
After reprocessing ... 53

Adding and dispensing chemical agents ... **54**
Process chemicals ... 54
Neutralising agent ... 54
Cleaning agent ... 54
Dispensing systems ... 55
Colour coding of suction lances ... 55
Dispensing modules ... 56
Replacing the canister ... 57
Setting the dispensing concentration ... 59

Operation ... **60**
Selecting a programme ... 60
Programme information ... 60
Starting a programme ... 61
Selecting and deselecting additional functions ... 61
Starting a programme immediately ... 61
Starting the programme using a timer ... 62
Programme sequence indicator ... 63
End of programme ... 64
Acknowledging the end of the programme ... 64
Displaying programme information ... 64
Batch control ... 65
Interrupting a programme ... 66
Cancelling a programme ... 67
Programme cancelled due to a fault ... 67

Machine functions ... **69**
Menu structure ... 69
Filter interval ... 70
Dispensing systems ... 71
Filling dispensing paths ... 71
Rinsing dispensing paths ... 72
AutoClose ... 73

Documentation 74

Settings **75**
Menu structure 75
Display brightness 75
Volume 76
Welcome tone 77

Process documentation **78**
Logging process data 78
Communication modules 79

Maintenance **80**
Periodic checks 80
Routine checks 80
Cleaning the filters in the wash cabinet 81
Cleaning the spray arms 82
Cleaning the machine 84
Checking the load carriers 84
Replacing the HEPA filter 85
Process validation 86

Troubleshooting **88**
Technical faults and messages 88
Maintenance and testing 88
Dispensing/Dispensing systems 89
Insufficient salt/Water softener 90
Filters 90
Cancellation with fault number 91
Door 92
Unsatisfactory cleaning and corrosion 93
Spray arm monitoring/wash pressure 94
Noises 95

Problem solving guide **96**
Cleaning the drain pump and non-return valve 96
Cleaning the water intake filters 97

After sales service **98**
Contacting Customer Service 98

Installation **99**
Setup and alignment 99
Hose holder 101
Lids 101
Building under a continuous worktop 102
Electromagnetic compatibility (EMC) 103

Electrical connection **104**
Equipotential bonding connection 104

Plumbing **105**
Connection to the water supply 105
Connecting the drain hose 108

Compressed air connection **109**
Connecting the compressed air 109

Contents

Programme chart **110**
Programmes for breathing apparatus 110
Additional programmes 110
Technical data **111**
Caring for the environment **113**
Disposal of the packing material 113

Applicable symbols

Symbol	Key
	For warnings, see “Warnings and safety notes”
	Mandatory sign, see “Warning and safety notes”
	Observe the operating instructions
	VDE symbol
	EMC symbol of the VDE
	Do not dispose of electrical machines in household waste; they need to be disposed of separately, see “Disposal of your old machine”
	CE marking of the EU The corresponding declaration of conformity is enclosed with the machine and can be obtained from the manufacturer.
	Manufacturer

Symbols and conventions used in this document

Warnings

⚠ Warnings contain information which is important for safety. This alerts you to the potential danger of injury to people or damage to property.
Read these warning notes carefully and observe the procedural instructions and codes of practice they describe.

Notes

Notes provide information of particular importance that must be observed.

Additional information and comments

Additional information and comments are contained in a simple frame.

Operating steps

Operating steps are indicated by a black square bullet point.

Example:

■ Select an option.

Display

Display text can be identified from the special font.

Example:

Save.

Definition of terms

Washer-disinfector

In these operating instructions, the machine is referred to as a cleaning machine.

Load items

The term “load items” is used wherever the items to be processed are not defined in any further detail.

Load carrier

Unless otherwise specified, all components and parts for holding load items are referred to as load carriers, e.g. mobile units, baskets, modules, inserts, injector nozzles, etc.

Process chemicals

All media dispensed during a programme sequence are generally referred to as process chemicals, e.g. cleaning agents.

Wash water

The term “wash water” refers to water or to a mixture of water and process chemicals.

Cycle

Machine-based cleaning and reprocessing procedures are generally referred to as cycles.

Machine overview
PLW 8683 Safety AirPro

with (door) pull-open lock

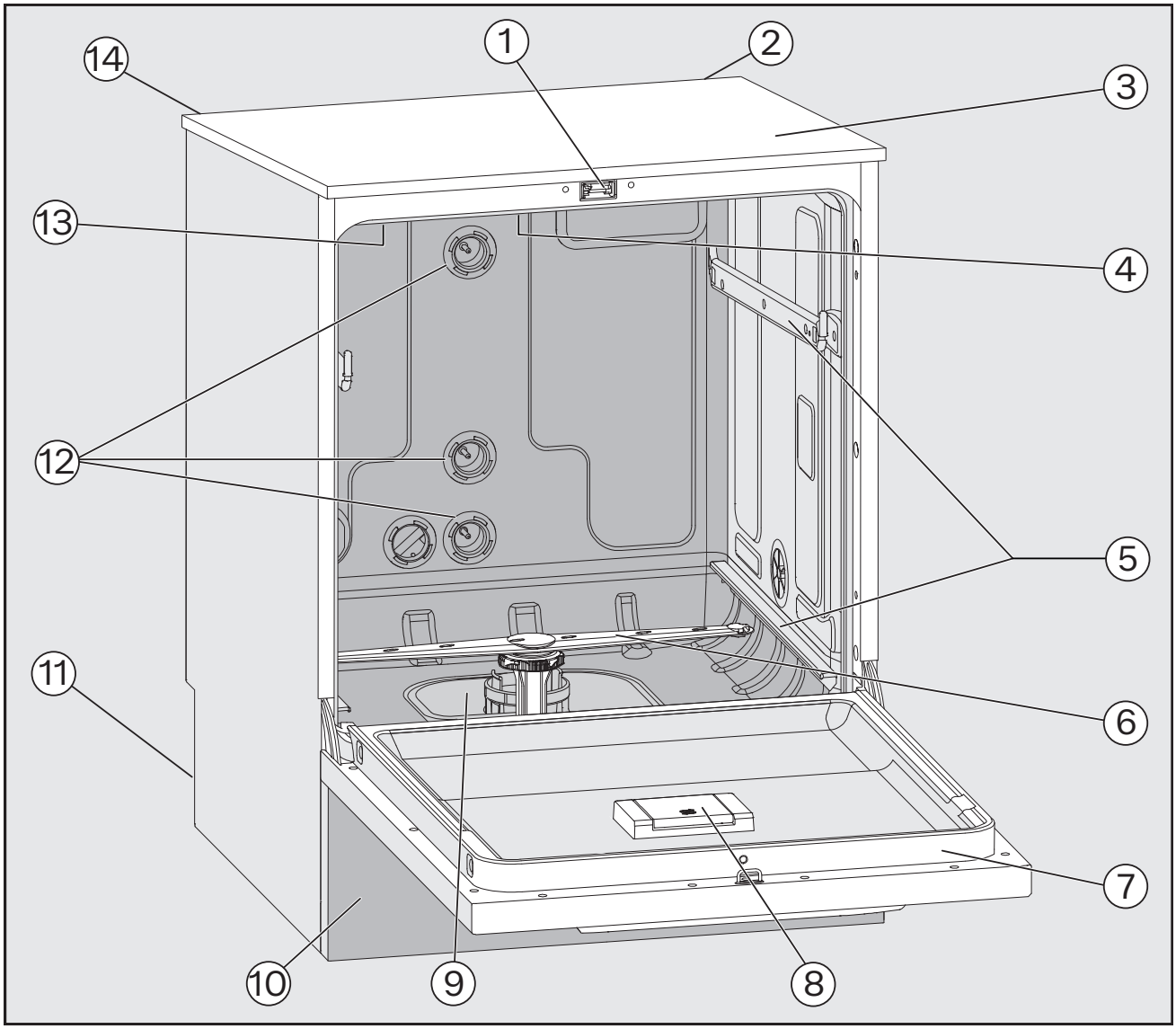

① Door lock

② Module slot for XKM communication module

③ Test point for performance tests (top, front right; may be visible with lid removed)

④ Top machine spray arm

⑤ Rails for baskets and mobile units

⑥ Lower machine spray arm

⑦ Data plate

⑧ Salt container

⑨ Filter combination

⑩ Plinth panel

⑪ Rear:
- Electrical and water connections
- Connections for external dispensing modules (DOS modules)

⑫ Water connections for baskets and mobile units

⑬ Compressed air connection in the wash cabinet

⑭ Compressed air connection

Control panel
PLW 8683 Safety AirPro

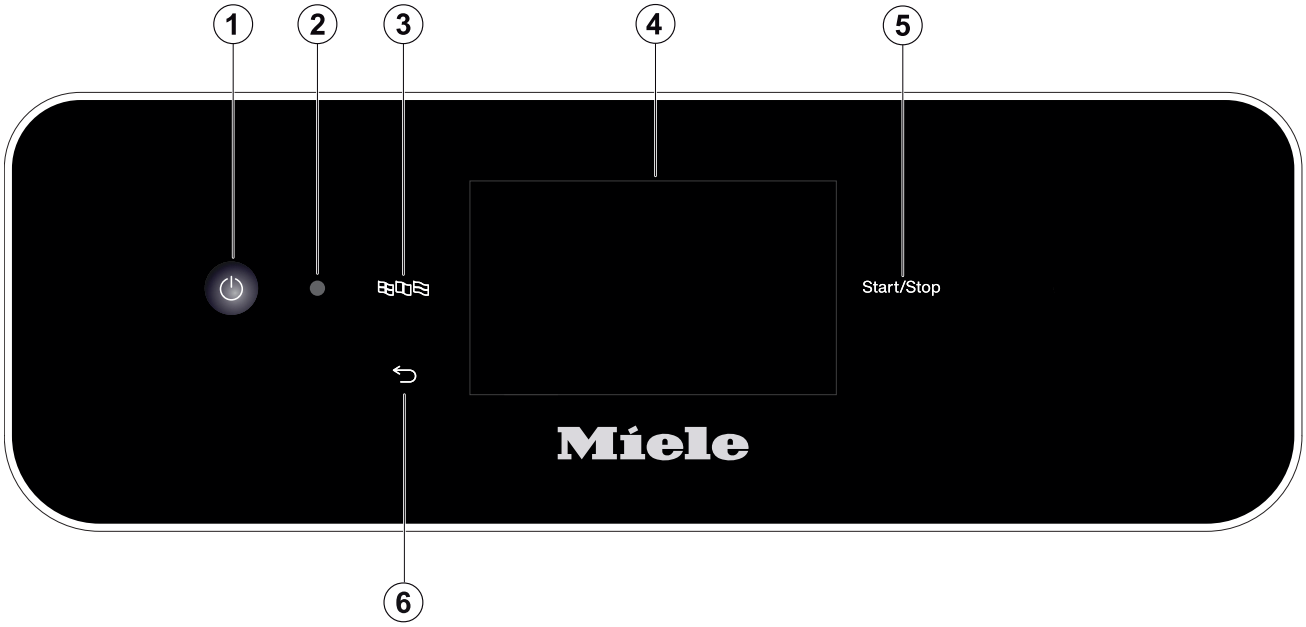

① ⏻ On/Off sensor control
For switching the machine on and off

② Service interface
Testing and transmission point for Miele Customer Service

③ button (language selection)
For selecting the display language

④ Touch display
For displaying and selecting control elements

⑤ *Start/Stop* button
For starting or cancelling a programme

⑥ button (cancel or back)
For cancelling a process in the user interface (not for cancelling programmes)

Machine overview PLW 8693 Safety AirPro

with active drying, automatic door opener and steam condenser

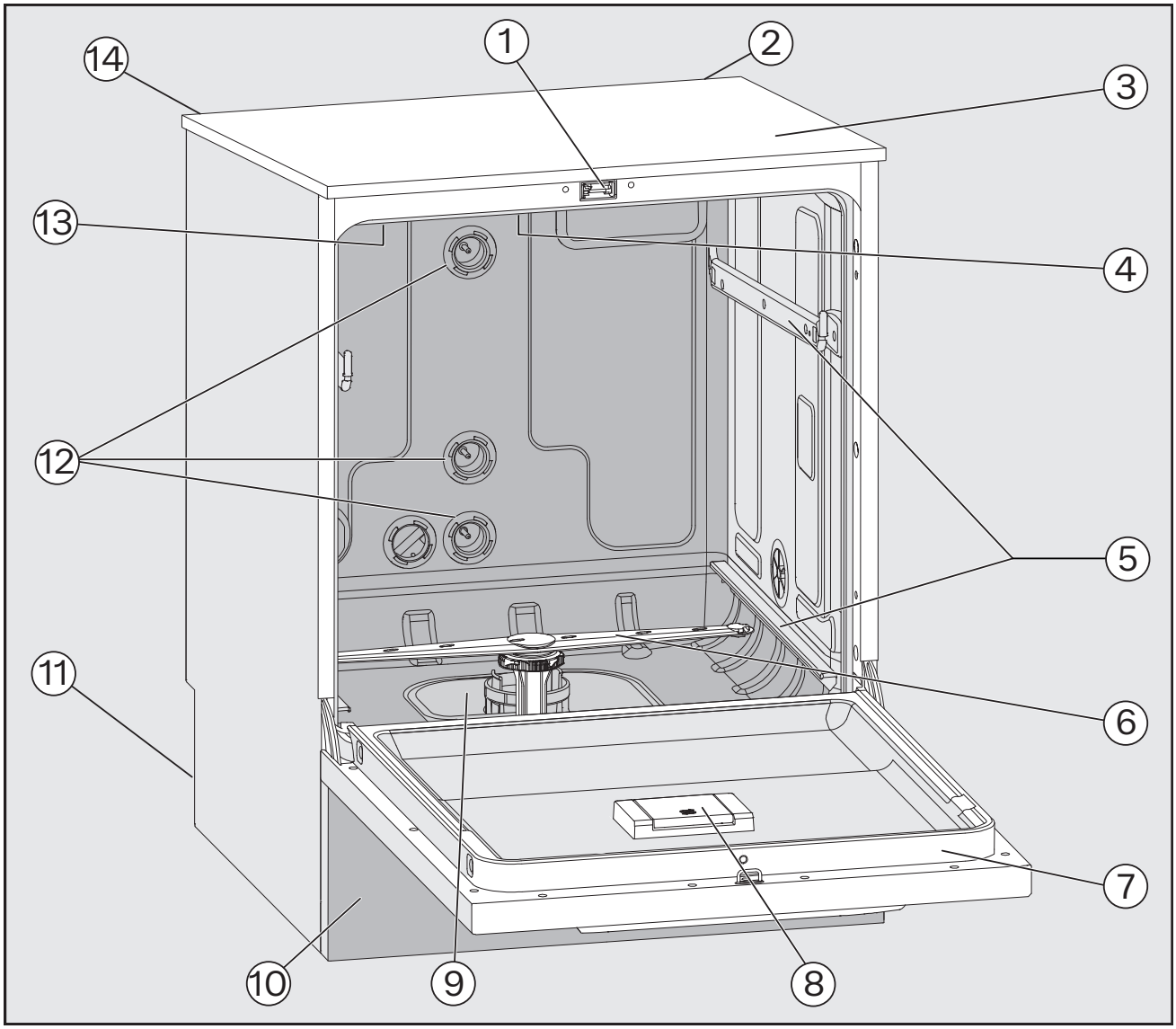

① Door lock

② Module slot for XKM communication module

③ Test point for performance tests (top, front right; may be visible with lid removed)

④ Top machine spray arm

⑤ Rails for baskets and mobile units

⑥ Lower machine spray arm

⑦ Data plate

⑧ Salt container

⑨ Filter combination

⑩ Plinth panel with service flap

⑪ Rear:
- Electrical and water connections
- Connections for external dispensing modules (DOS modules)

⑫ Water connections for baskets and mobile units

⑬ Compressed air connection in the wash cabinet

⑭ Compressed air connection

Control panel
PLW 8693 Safety AirPro

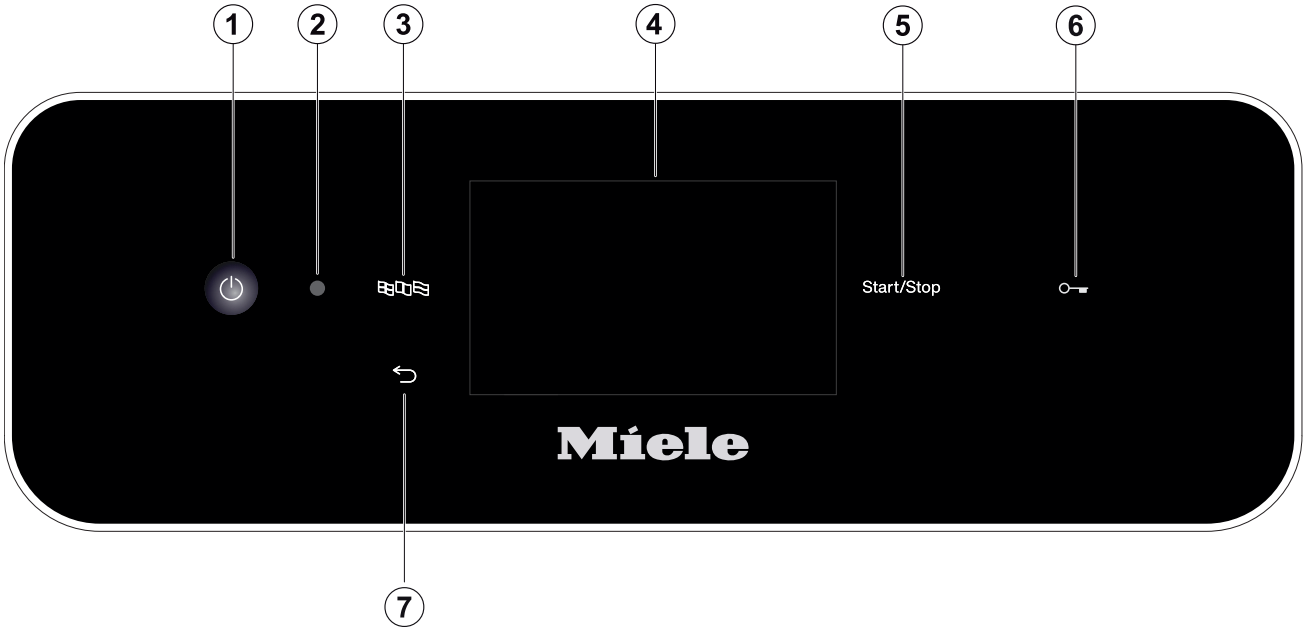

① ⏻ On/Off sensor control
For switching the machine on and off

② Service interface
Testing and transmission point for Miele Customer Service

③ button (language selection)
For selecting the display language

④ Touch display
For displaying and selecting control elements

⑤ *Start/Stop* button
For starting or cancelling a programme

⑥ sensor control (door lock)
Opening (unlocking) or closing (locking) the door

⑦ button (cancel or back)
For cancelling a process in the user interface (not for cancelling programmes)

Sensor controls on the control panel

Most of the sensor controls on the control panel are backlit with LEDs (light-emitting diodes). These have the following meaning during operation.

Sensor control	LED	Status
	ON	The display language can be changed.
⮌	**ON**	A process on the display can be cancelled.
	OFF	The display shows the top menu level.
		A programme is running.
		One or more system messages must be acknowledged.
Start/Stop	**ON**	A programme is running.
	Pulsing	Display ON: - A programme has been selected but not yet started. Display OFF: - The machine is in Standby mode.
	FLASHES RED	A fault has occurred (see 📖 “Problem solving guide”).
	OFF	A programme has finished.
sensor control	**ON**	The door is closed (locked) and a programme has been selected but not yet started.
		A programme is running.
		A programme has finished and the door is closed (locked).

General description

The cleaning machine is designed for use in professional, works and volunteer fire brigades and for the purposes of reprocessing breathing apparatus.

How it works

The cleaning machine is used for reprocessing breathing apparatus and similarly categorised components and parts.

Integrated process monitoring ensures standardisation and reproducibility. The machine also helps to increase work efficiency and occupational health and safety, as well as preserving the value of the load items.

The use of suitable load carriers (baskets, modules, inserts, etc.) is important to ensure adequate cleaning and protection of the load items.

The cleaning machine is equipped with a connection for a compressed air system. The compressed air is intended exclusively for reprocessing air regulators in Miele load carriers specifically designed for this purpose.

Purpose

This Miele cleaning machine can be used to clean, rinse and chemically disinfect breathing apparatus for professional use that can be reprocessed by machine, such as air regulators, breathing masks and compressed air unit carrier frames. Information issued by the manufacturers of the breathing apparatus must be heeded.

The cleaning machine may only be used with load carriers and other components approved for the machine by the manufacturer and matched to the breathing apparatus.

Observe the information issued by the manufacturer of the load items.

For further areas of application or additional programmes, please contact Miele Customer Service.

Intended user group

The cleaning machine may only be used by trained specialist personnel who have the appropriate expertise for reprocessing breathing apparatus, such as air regulators, breathing masks and compressed air unit carrier frames.

Installation requirements

Installation site

Depending on the variant, the cleaning machines are equipped for professional, plant and volunteer fire brigades.

The installation must be carried out in rooms in which ambient conditions meet the following requirements:

- Draught-free and dry
- Equipped with suitable room ventilation
- Solid and even surface, observe floor load-bearing capacity
- No direct sunlight

The cleaning machine must only be connected in conjunction with a residual current device.

Conditions of use

The cleaning machine is equipped for professional, plant and volunteer fire brigades and has the necessary processing programmes.

For further areas of application or additional programmes, please contact Miele Customer Service.

Some cleaning machines feature active drying. Depending on the application in question, complete (internal) drying of the load items must be ensured after reprocessing without active drying.

Contraindications

The machine must not be operated in locations in which ambient conditions do not meet the following requirements:

Operation (according to IEC/EN 61010-1):	
Ambient temperature	5 °C to 40 °C
Max. relative humidity	80 % for temperatures up to 31 °C
linear decrease to	50 % for temperatures up to 40 °C
Min. relative humidity	10 %
Altitude above sea level (according to IEC/EN 61010-1)	Up to 2.000 m
Background noise level	N/A

Foreseeable misuse

The breathing apparatus must only be contaminated with the usual soiling from fire brigade operations or exercises. Manual pre-cleaning is required if the apparatus is heavily soiled with soot.

The reprocessing of breathing apparatus that has not been approved for machine reprocessing by its manufacturer is not permitted.

The cleaning machine must not be used for reprocessing any products other than breathing apparatus, especially not for reprocessing medical devices.

Failure of the operator to comply with routine checks and regular service intervals.

Failure to observe the specified installation requirements.

Daily operators

For day-to-day use, operators must be instructed on the basic functions and how to load the machine and must also be trained regularly.

You need to know how to reprocess personal protective equipment such as air regulators, breathing masks and compressed air unit carrier frames.

Day-to-day work is carried out using the user level and in the Machine functions and Settings menus. The menus are freely accessible to all users.

Administration

More advanced tasks, e.g. interrupting or cancelling a programme, require more detailed knowledge about the machine reprocessing of personal protective equipment and the process chemicals used.

Alterations to the reprocessing process or adaptations to the machine, components, accessories used or on-site conditions require additional specific knowledge of the machine.

Validation processes assume specialised knowledge of the machine reprocessing of personal protective equipment, of the processes involved and of applicable standards and legislation.

The Extended settings menu incorporates all administrative processes and settings. This is protected by a PIN code.

This machine complies with all statutory safety requirements. Inappropriate use can, however, lead to personal injury and material damage.
Read these instructions carefully before using it for the first time to avoid the risk of accidents and damage to the machine.
Keep these instructions in a safe place where they are accessible to users at all times.

Correct application

▶ Use of the machine is only permitted for the applications expressly approved in the operating instructions. Conversions, modifications and any other use are not permitted and could be dangerous.
The reprocessing procedures are only designed for air regulators, breathing masks and compressed air unit carrier frames declared by the manufacturer as reprocessable. The information provided by the manufacturer of the load items must be observed.

▶ Observe the warning and safety notes provided by the load item manufacturers and their instructions on how to handle the load items correctly.

▶ This machine is intended for indoor use only.

Risk of injury

Please pay attention to the following notes to avoid injury

▶ The machine may only be commissioned, repaired and maintained by Miele Customer Service or a qualified service technician authorised by the manufacturer of the machine. A Miele service contract is recommended to ensure full compliance with the normative and regulatory provisions. Incorrect repairs can cause considerable danger to users.

▶ Do not install the machine in an area where there is any risk of explosion or of freezing conditions.

▶ In order to reduce the risk of water damage, the area around the machine should be limited to furniture and fittings that are designed for use in commercial environments.

▶ Some metal parts pose a risk of injury/being cut. Wear cut-resistant protective gloves when transporting and setting up the machine.

▶ The machine must not be installed in the immediate vicinity of room doors. When the wash cabinet door is open, it could block the room doors, locking people in or out. If the wash cabinet door also protrudes into the walkway, it poses a tripping hazard and could block possible escape routes.

▶ If the machine is installed under a worktop, it must be installed under a continuous worktop which is firmly secured to adjacent units to achieve the necessary stability.

▶ The electrical safety of the machine can only be guaranteed when it is correctly earthed. It is essential that this standard safety requirement is observed and regularly tested. If in any doubt, please have the electrical installation inspected by a qualified electrician.

▶ A damaged or leaking machine can pose a threat to your safety. Always switch off a damaged or leaking machine immediately and contact Miele Customer Service.

▶ Label machines which have been taken out of operation and secure them against being switched on again without authorisation. The machine may only be put back into operation once it has been successfully repaired by Miele Customer Service or by an appropriately qualified specialist.

▶ Personnel operating the machine should be trained regularly. Untrained personnel must not be allowed access to the machine or its controls.

▶ Only use process chemicals which have been approved by their manufacturer for the relevant application. The manufacturer of the process chemicals is liable for any negative influences on the material of the load and the machine.

▶ Take care when handling chemical agents. These may contain irritant, corrosive or toxic ingredients.
Please observe the chemical agent manufacturer's safety instructions and safety data sheets.
Wear protective gloves and goggles.

▶ The machine is designed for operation with water and recommended additive chemical agents only. Organic solvents and flammable liquid agents must not be used in it.
This could cause an explosion, damage rubber or plastic components in the machine and cause liquids to leak out of it.

▶ Any seals on the load items should be protected against prolonged contact with wash water. Therefore, always close unused connections with protective caps or blind covers.

▶ The water in the cabinet must not be used as drinking water.

▶ Do not lift the machine by protruding parts such as the control panel or the opened service flap as these could be damaged or torn off.

▶ Do not sit or lean on the opened door. This could cause the machine to tip up and be damaged or cause an injury.

▶ When using this machine in the higher temperature ranges, be especially careful not to scald or burn yourself or come into contact with irritant substances when opening the door. Where disinfecting agents are used there is a danger of inhaling toxic fumes.

▶ Should personnel accidentally come into contact with toxic vapours or chemical agents, follow the emergency instructions given in the manufacturer's safety data sheets.

▶ If a programme is interrupted or cancelled, the inside of the wash cabinet may be contaminated in various ways depending on the application, e.g. with pathogenic germs, toxic or carcinogenic substances, etc. Appropriate protective measures must be taken when opening the wash cabinet door, e.g. the use of gloves.

▶ Load carriers and load items must be allowed to cool down before removal. Empty any remaining water into the wash cabinet or an on-site slops basin before removing items.

▶ If the inserts for reprocessing air regulators show that the pressure is too low or medium-pressure hoses of the air regulators have disconnected from the quick-release couplings, the wash water can enter the air regulators. Particles may also get into the air regulators and impair their function.
Check the air regulators for moisture and particles in accordance with the information from the manufacturer.

▶ Never clean the machine or near vicinity with a water hose or a pressure washer.

▶ The machine must be disconnected from the mains electricity supply before any maintenance or repair work is carried out.

▶ There may be a risk of slipping if liquid is spilt on the floor depending on the type of flooring and footwear being worn. Keep the floor dry where possible and take care to clean up any liquid spills straight away. Take the necessary precautions when cleaning up hazardous substances and hot liquids.

Quality assurance

The following points should be observed to assist in maintaining quality standards when reprocessing breathing apparatus and to avoid damage to the loads being cleaned.

▶ If it is necessary to interrupt a programme in exceptional circumstances, this may only be done by authorised personnel.

▶ It is the responsibility of the operator to demonstrably ensure reprocessing standards in routine operation. Process results should be inspected and documented on a regular basis.

▶ Make sure items being washed are suitable for machine reprocessing and are in good condition. Plastic items must be thermally stable. Nickel plated items and aluminium items can be machine processed using special procedures only.
Items containing iron, and soiling containing residual rust must not be placed in the cabinet.

▶ Under certain circumstances, process chemicals may damage the machine. The recommendations issued by manufacturers of process chemicals must be followed.
Contact the machine manufacturer in the event of damage and any suspicion of material incompatibility.

▶ Abrasive substances must not be placed in the machine as they could cause damage to the mechanical components of the water supply. Any residues of abrasive substances on items to be washed must be removed without trace before reprocessing in the machine.

▶ Pre-treatments with cleaning or disinfecting agents can create foam, as can certain types of soiling and chemical agents. Foam can have an adverse effect on the cleaning and disinfection result.

▶ Processes must be set up such that foam cannot escape from the wash cabinet. It would hinder the correct functioning of the machine.

▶ The process used must be monitored on a regular basis by the supervisor to check foaming levels.

▶ To avoid the risk of damage to the machine and any accessories used with it caused by chemical agents, soiling and any reaction between the two please read the notes in “Chemical processes and technology”.

▶ Even when a process chemical, e.g. cleaning agent, is recommended by the manufacturers of the process chemical, the machine manufacturer takes no responsibility for the effect of such process chemicals on the load items.
Please note that changes in product formulation, storage conditions, etc. which are not announced by manufacturers of process chemicals may impair the quality of cleaning results.

▶ When using process chemicals, always consult the instructions issued by individual manufacturers. Process chemicals must only be used for the purpose they are designed for by the manufacturer to avoid any material damage or the occurrence of very strong chemical reactions (e.g. oxyhydrogen explosion).

▶ Always follow the relevant manufacturer's instructions on storage and disposal of process chemicals and their containers.

▶ Load carriers which hold the load items must be used only as intended.
Lumened load items must be thoroughly cleaned, internally and externally, with the wash water.

▶ Place small and light items in a small-part basket so that they do not block the spray arms.

▶ The amount of residual solvents and acids on items going into the cabinet should be minimal.
There should be no more than a trace of any solvents with a flash point of below 21 °C.

▶ Chloride solutions, in particular hydrochloric acid, must not be placed in the cabinet.

▶ Ensure that solutions or steam containing chlorides or hydrochloric acid do not come into contact with the stainless steel outer casing of the machine in order to avoid any damage through corrosion.

▶ After any plumbing work the water pipework to the machine will need to be vented. If this is not done, components can be damaged.

▶ The gaps between a built-in machine and adjacent cabinetry must not be filled e.g. with silicone sealant as this could compromise the ventilation to the circulation pump.

▶ Please follow the advice on installation in these operating instructions and the installation plan.

Safety with children

▶ Children must be supervised in the vicinity of the machine. Do not allow children to play with the machine. They could get locked inside it.

▶ Children must not use the machine.

▶ Keep children away from chemical agents. These can cause burning in the mouth, nose and throat if swallowed, or inhibit breathing. Keep children away from the machine when the door is open. There could still be residual chemical agent in the cabinet. Observe the safety data sheets for the chemical agent and seek medical advice immediately if a child has swallowed chemical agent or got it in the eyes.

Use of components and accessories

▶ Only use original spare parts and accessories from the manufacturer, which are suitable for the application they are required for. Model designations are available from Miele.

▶ Only use original load carriers from the machine manufacturer. Using load carriers made by other manufacturers or making modifications to original accessories can result in unsatisfactory cleaning results.

Symbols on the machine

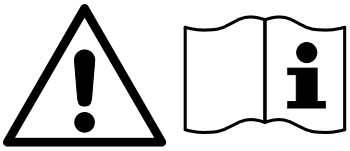

Warning:
Observe the operating instructions!

Warning:
Danger of electric shock!

Warning: Hot surfaces:
It can be very hot inside the wash cabinet when the door is opened!

Risk of being cut:
Wear cut-resistant protective gloves when transporting and setting up the machine!

Disposing of your old machine

▶ Please note that the machine may contain contamination from blood and other bodily fluids as well as substances which are harmful to the health and environment, and must be decontaminated before disposal.
For environmental and safety reasons, dispose of all process chemical residues in accordance with safety regulations (wear safety goggles and gloves).
Remove or disable the door lock prior to disposal of the machine, so that children cannot become trapped inside. Then make appropriate arrangements for safe disposal of the machine.

Operation via control panel

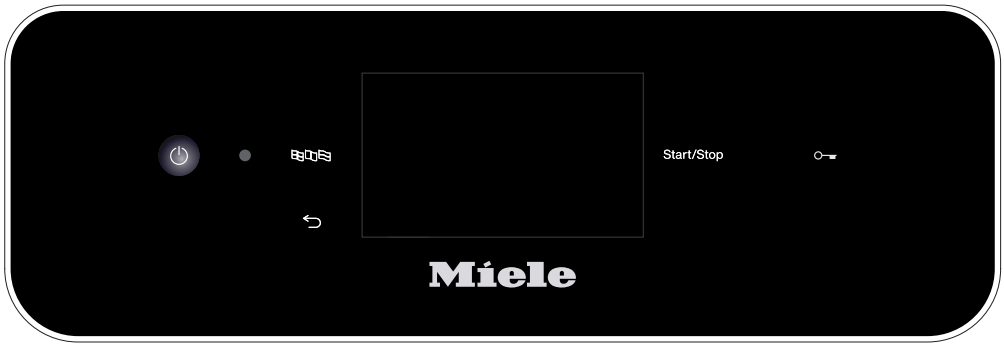

The machine is usually operated via the control panel, which has an integrated touch display and various sensor controls.

The sensor controls are backlit with LEDs and are only displayed in context, i.e. if they can be operated in conjunction with the display. Otherwise, they are not visible and cannot be selected.

The touch display and sensor controls react to touch.

> The control panel with sensor controls and the touch display can be scratched by pointed or sharp objects, e.g. pens.
> Only touch the control panel with your fingers or special pens for touch displays which have rubber tips (touch pens).

Every touch on the sensor controls is confirmed by a keypad tone. You can adjust the volume of the keypad tone or switch it off on the display, see ▸ ⚙ Settings ▸ Volume.

Display screens

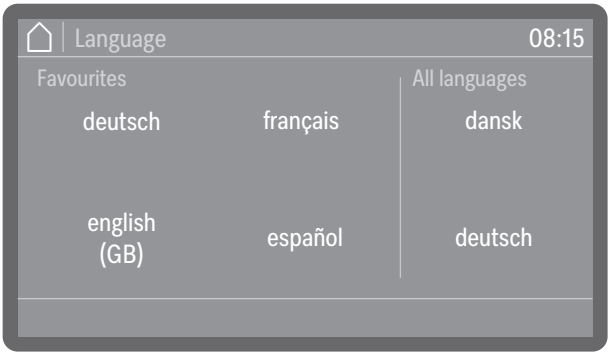

All display screens shown in these instructions are examples and may differ from the actual display screens.

Switching on

The machine must be connected to the electrical supply.

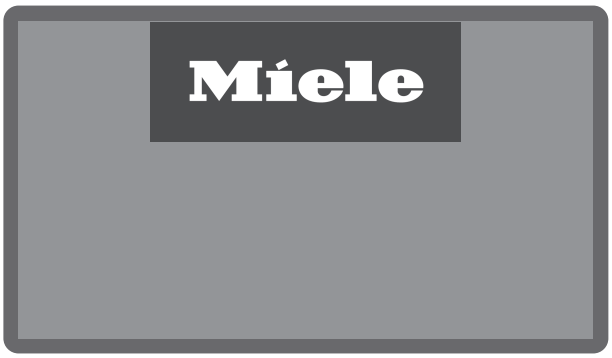

- Press the ⏻ On/Off sensor control until the Miele logo appears on the display.

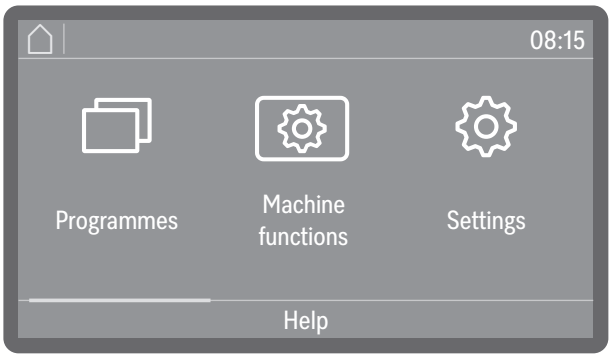

As soon as the machine is ready for operation, the display changes and shows the menu selection.

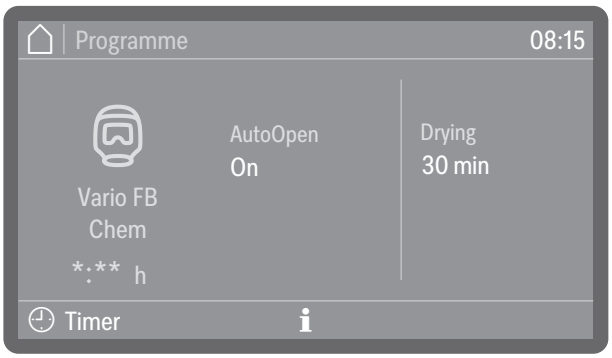

(:** Programme running time varies depending on configuration)*

If the Memory function is activated, the most recently started programme is displayed.

Tip: The Memory function can be activated or deactivated at ▸ ⚙ Extended settings ▸ Programme options ▸ Memory.

If the machine is being used for the first time, or if the factory default settings have been reinstated, some basic parameters, e.g. language, date, time, etc., must first be set.

Switching off

■ Press the ⏻ On/Off sensor control for a few seconds.

The machine then goes into Standby mode for approx. 1 minute before it switches off completely.

Standby/Off

If the machine has not been used for approx. 10 minutes, it can be set to Standby mode or switched off automatically.

Standby

In Standby mode, the machine remains switched on and the *Start/Stop* sensor control pulses. The machine can be reactivated by pressing the *Start/Stop* sensor control, touching the display or opening the door.

Off

After automatic switch-off, the machine is switched off and can be switched on again by pressing the ⏻ On/Off sensor control.

Touch display

Home button ⌂

As soon as you have opened a menu or the programme selection, the home button ⌂ is activated in the top left of the display. This will take you back to the menu selection at any time.

Scroll bar

The coloured scroll bar appears in the lower part of the display if there are more selection options available than can be displayed.

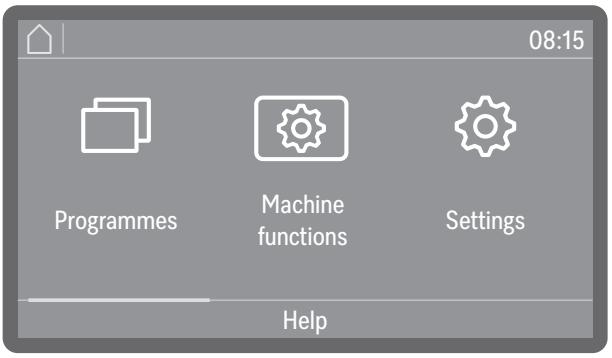

You can scroll right or left by swiping your finger across the screen. To do this, place your finger on the touch display and swipe it in the direction you want.

Inputs on the display

In these operating instructions, the descriptions for operating the menus are shown as follows:

The input path describes the sequence to follow to access the menu level in question. The listed menu options have to be selected individually on the touch display.

It is not always necessary to follow the complete path. For example, if you have already opened one of the upper levels of the input path, you can continue to follow the path from this level.

Example:

Machine functions

Filter interval

Filter combination

Example 2:

▸ Machine functions ▸ Filter interval ▸ Filter combination

Display and options

All setting options from the menus are presented as a list with a short explanation. Preselected options are highlighted in colour.
The further procedure is then described.

Example:

■ Select a filter.

- Remaining filter cycles or Remaining time filter (depending on the type of filter selected)

  Displays the remaining programme sequences (cycles) or operating hours until the next maintenance (cleaning or replacement)

- Reset interval

  Resets the counters for the filter cycles

⚠ The intervals must only be reset once the filters have been cleaned or replaced.

■ Select an option.

Setting numerical values

Numerical values can be entered in 2 different ways.

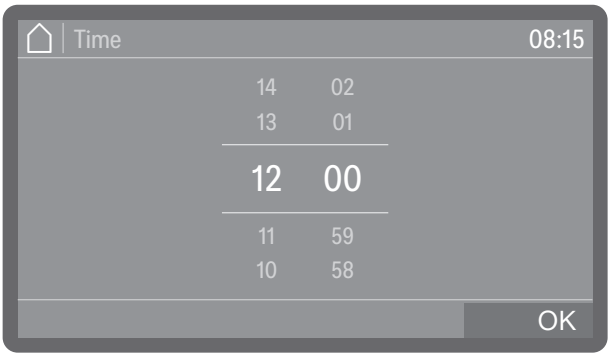

Firstly, you can place a finger on the numbers highlighted in colour and change them by swiping up or down.

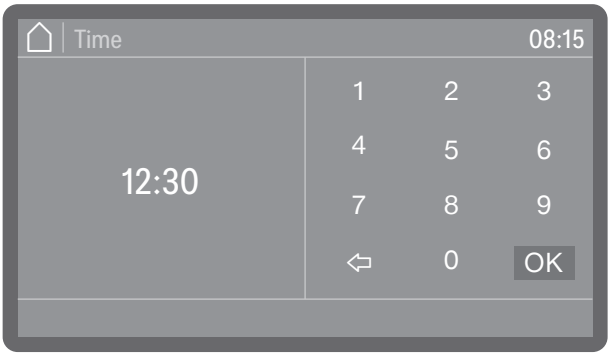

Secondly, you can call up a numerical keypad by briefly tapping the numbers highlighted in colour and then entering the numbers directly.

Depending on the context, numbers entered directly may be rounded up or down. If, for example, it is only possible to enter values in increments of 10 (10, 20, 30, etc.), the value is rounded down to 10 when you enter 12, and rounded up to 20 when you enter 15.

Selecting the language

You can change the display language at any time.

- Press the language selection sensor control next to the display.

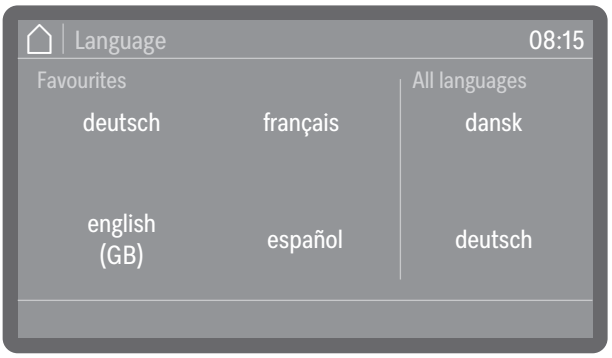

- Scroll to the language you want and select it by tapping it.

The order of the languages in the display is variable. The more often a programme is started in the selected language, the further forward the language moves in the sequence. The 4 most frequently selected languages are shown on the display as Favourites.

System messages ℹ

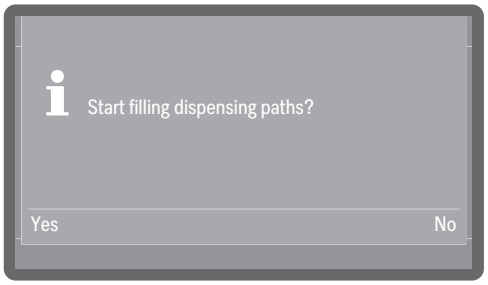

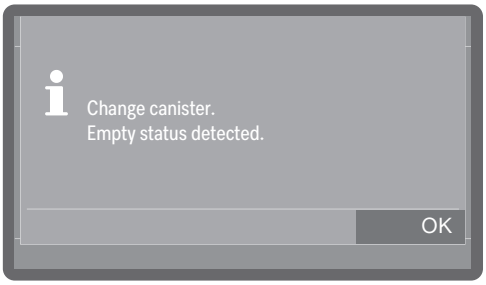

System messages are indicated by the information symbol ℹ. These give information about current processes and the status of the machine. If there is more than one system message, they are shown one after the other and – depending on the message – must be processed or acknowledged individually.

Fault messages ⚠

In the event of a fault, a warning symbol ⚠ appears on the display and the *Start/Stop* sensor control flashes red in rapid succession. If buzzer tones are activated, a warning tone will also sound. Warning messages must be acknowledged by tapping the warning symbol. Troubleshooting assistance can be found in 📖 “Problem solving guide”.

Help button

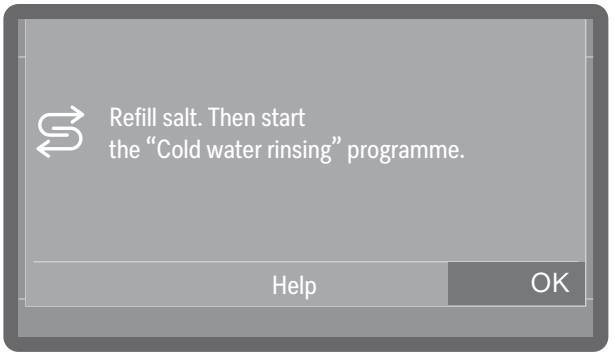

If the Help button appears at the bottom of the display, you can display assistance for operation or troubleshooting. If required, tap the Help button and allow the machine to guide you through the process step by step.

Networking (ᯤ or L)

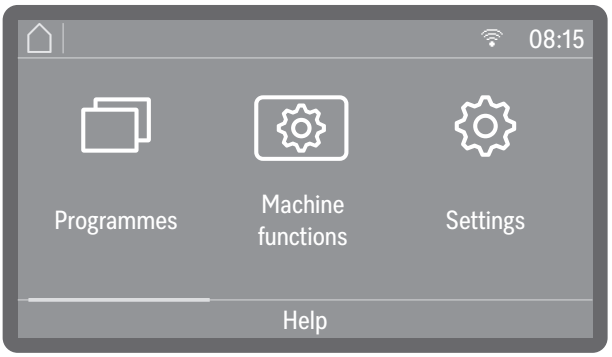

If the machine has been networked, a symbol for the available interface is shown at the top of the display. ᯤ stands for a WiFi connection, L for a wired LAN connection. If the machine cannot establish a WiFi connection with the router, the symbol will be shown with a cross through it ᯤ.

Tip: The interface is set up at ▸ ⚙ Extended settings ▸ Network.

Installation and connection

Before commissioning, the cleaning machine must be securely installed, and the water inlet and drain hoses and the mains cable correctly connected. Follow the instructions in “Installation”, “Water connection” and “Electrical connection” as well as the instructions in the installation plan for the cleaning machine.

Procedure

The commissioning process follows a set procedure which cannot be interrupted.

Once commissioning is complete, you can change all settings made during commissioning via the menu ▸ Extended settings. The only exceptions are the language selection, which is made using the language selection sensor control on the control panel, and the selection of the water connections, which can only be reset by Customer Service.

Switching on

- Press the ⏻ sensor control.

Selecting a language

Commissioning starts with the selection of the display language.

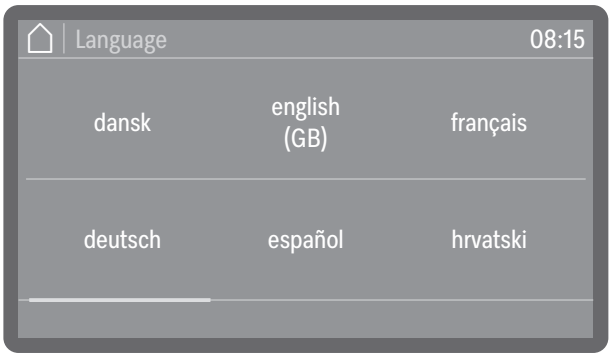

- Scroll to the language you want and select it by tapping it.

WiFi setup

You have to select whether you want to integrate the cleaning machine into a WiFi network during commissioning or whether you want to integrate it at a later time or not at all.

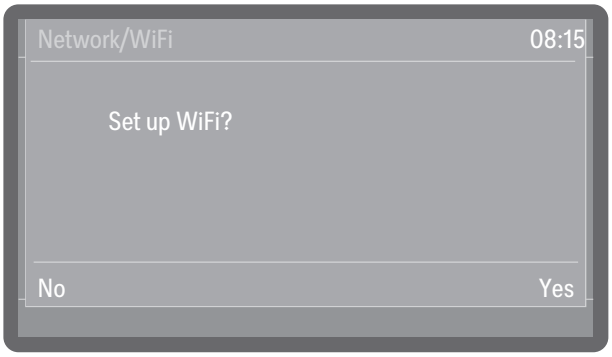

- Select Yes to integrate the cleaning machine into an existing WiFi network on site.
  To do this, follow the instructions in ▸ Extended settings ▸ WiFi / LAN ▸ Set up WiFi.
- Select No if you want to integrate the cleaning machine into a WiFi network at a later time or not at all.

Setting the date

Set today's date.

- Set the date in the order of year, month and day. The order is predefined.
- Press OK to save the setting.

Tip: You can customise the display format after commissioning at ▸ ⚙ Extended settings ▸ Date/ Time ▸ Date ▸ Date format.

Setting the time of day

Set the current time of day. The input format is predefined.

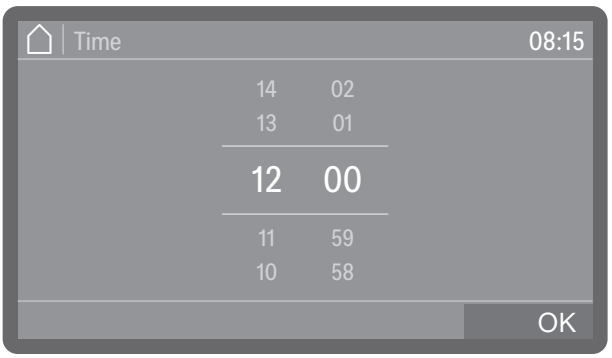

- Set the time of day and press OK to confirm your selection.

Tip: You can customise the display format after commissioning at ▸ ⚙ Extended settings ▸ Date/ Time ▸ Time ▸ Clock format.

Setting the temperature units

The temperature can be shown on the display in °C (degrees Celsius) or °F (degrees Fahrenheit).

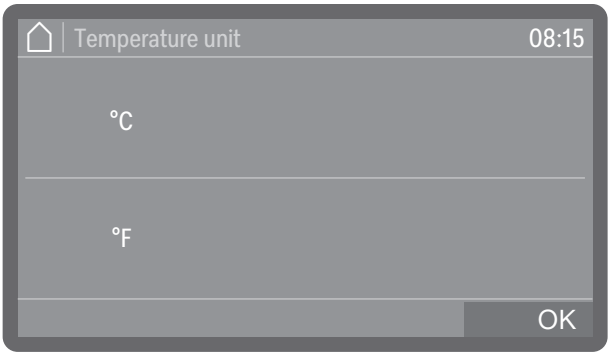

- °C

  Temperature display in Celsius.

- °F

  Temperature display in Fahrenheit.

- Select the temperature unit you want.
- Press OK to save the setting.

Setting the water hardness

You can find out the degree of hardness of the fresh water from your local water supplier.

As an alternative, you may also determine the approximate water hardness by using the test strip included with the machine. To do this, follow the instructions in “Determining the degree of hardness”.

With varying water hardness, always set the highest level. If the water hardness fluctuates between, for instance, 1.4 and 3.1 mmol/l (8 and 17 °dH), the water hardness must be set to 3.1 mmol/l (17 °dH).

Water hardness setting values can be found in the table in “Settings table”.

■ Select the Water hardness menu option.

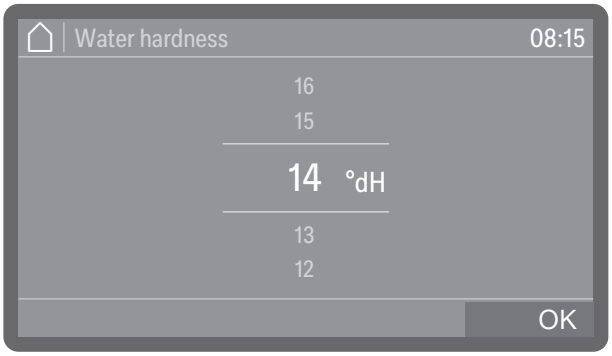

■ Set the water hardness.

■ Press OK to save the setting.

In the event of a fault, it will help the service technician if you know the hardness of your local water supply. Therefore, document the water hardness.

Selecting water connections

All available water connections are activated in the control system at the factory. Individual water connections can be subsequently deactivated, e.g. if no connection options are available for them.

Following commissioning, the water connections can be reinstated by Miele Customer Service.

■ Select one of the available water connections, e.g.:

- Hot water

  Hot water connection

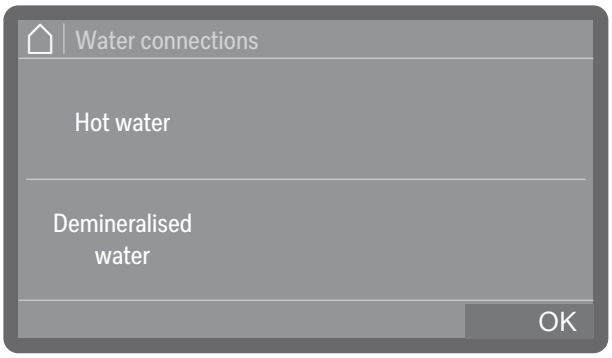

You can select and deselect the water connections by tapping them. Activated water connections are highlighted in colour.

■ Select OK to confirm your choice.

Checking water connections

Next, you can select whether you want to check the previously activated water connections. A check is carried out as to whether sufficient water can flow in.

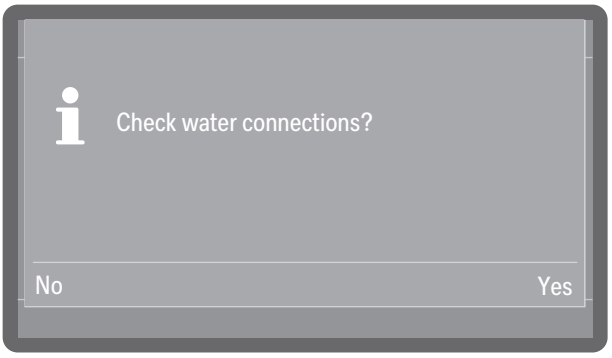

- Yes

  Starts the check. Before starting, make sure that the water connections are open.

- No

  Skips the check of the water connection.

■ Select an option.

Configuring dispensing systems

In the next step, you have to select whether you want to configure the dispensing systems present during commissioning or at a later time. The configuration includes activating or deactivating individual dispensing systems and setting the dispensing concentration.

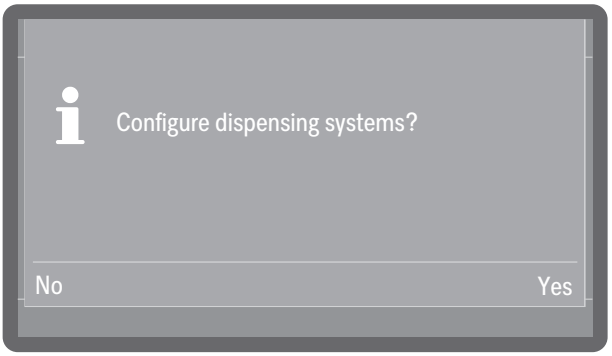

- Yes

  Starts the configuration of the dispensing systems. Follow the instructions in the display.

- No

  Skips the configuration of the dispensing systems. The settings then correspond to the factory default settings.

■ Select an option.

Tip: Further information and setting options can be found at ▸ ⚙ Extended settings ▸ Maintenance/Service ▸ Dispensing systems.

Filling and checking dispensing systems

Before filling the dispensing paths, make sure that the canisters are full and that the suction lances are screwed securely to the canisters and that they cannot suck in air.

When a dispensing system is used for the first time, it must first be filled with the dispensing medium so that no air is dispensed. You have to select whether you want to fill the dispensing systems during commissioning or at a later time.

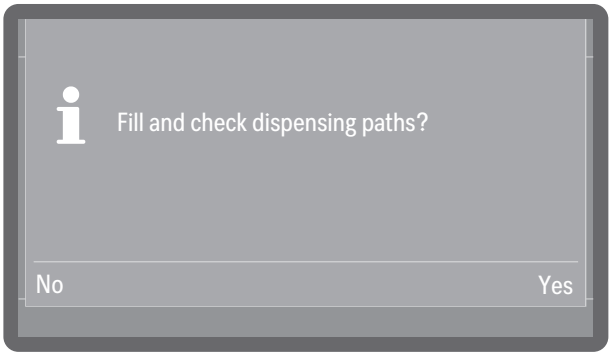

- Yes

  Select the dispensing systems one after the other and start the filling process.

- No

  Skips the filling of the dispensing systems, but this must then be carried out at a later time.

■ Select an option.

Tip: Further information and setting options can be found at ▸ ⚙ Extended settings ▸ Maintenance/Service ▸ Dispensing systems.

Commissioning completed

Your machine has been successfully commissioned once you see the following message:

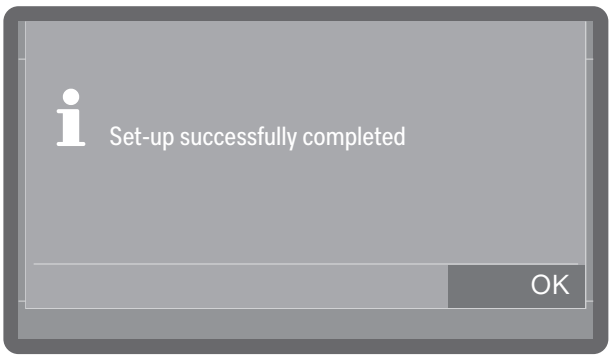

■ Confirm the message by pressing OK.

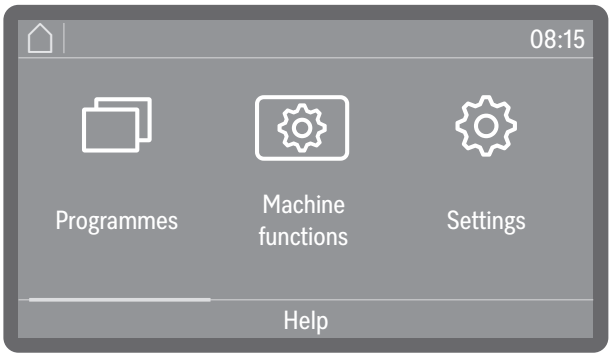

The cleaning machine is now ready for use.

Pull-open lock

Valid for cleaning machines with pull-open lock.

In the case of machines with a pull-open lock, the door can be opened at any time, even during a programme sequence. In the latter case, special caution is needed.

Opening the door

⚠ Danger of scalding, burning and chemical burns!
If the door is opened during a programme sequence, hot water and process chemicals can escape. The programme in progress is also interrupted and, under certain circumstances, even cancelled.
Only open the door when no programmes are running.

The control panel also serves as a door handle.

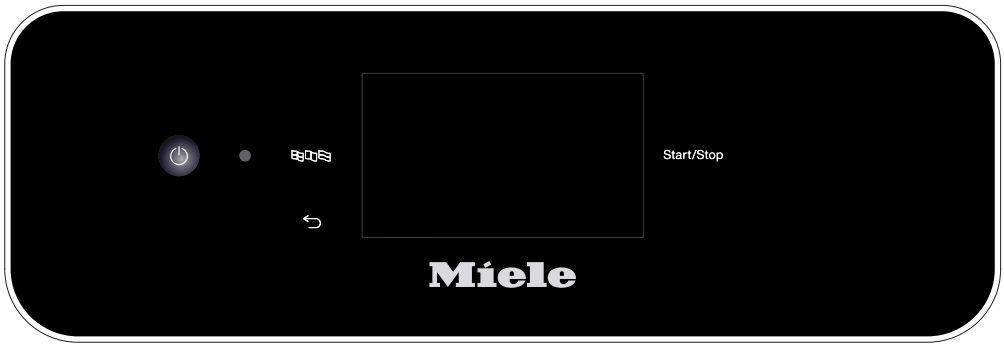

- Grasp the onset strip handle underneath the control panel and pull the door down to open it.

Closing the door

- Make sure that no objects or load items protrude into the closing area of the door.

⚠ Risk of injury caused by crushing.
Do not put your hand inside the door as it is closing. Risk of crushing.

- Raise the door upwards until the catch engages.

Comfort door lock

Valid for cleaning machines with automatic door opener.

The door of the wash cabinet is equipped with a Comfort door locking mechanism. When the door is closed, the Comfort door locking mechanism automatically pulls the door into the closed position and thus ensures it is sealed. The door is locked electronically.

Opening the door

A door that has been locked electronically can be opened under the following circumstances:

- The machine is connected to the power supply and the ⏻ On/Off sensor control is lit up.
- The symbol for the door sensor control is lit up.

■ To open the door, press the door sensor control.

The comfort door lock opens the door slightly.

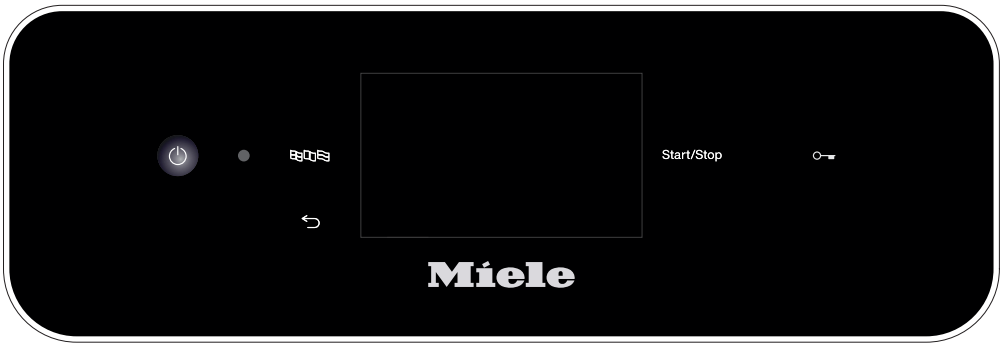

■ Open the door. The control panel serves as a door handle. Grasp the handle underneath the control panel and pull the door down to open it.

The temperature in the wash cabinet may be higher after a programme cycle. If the temperature exceeds 60 °C, a message is shown on the display when you press the door sensor control: Hot wash cabinet: Risk of injury, take care when opening the door..

■ Confirm the message by pressing OK.

Closing the door

■ Make sure that no objects or load items protrude into the closing area of the door.

⚠ Risk of injury caused by crushing.
Do not put your hand inside the door as it is closing. Risk of crushing.

■ Raise the door upwards until the catch engages.

If the AutoClose function is activated, the door is then pulled into the end position.

Tip: For more information on the AutoClose function, see
▸ ⚙ Machine functions ▸ AutoClose.

Opening the door using the emergency release

⚠ Danger of scalding, burning and chemical burns!
If the emergency release is operated during a programme sequence, hot water and process chemicals can escape. Where disinfectants are used, there is also a danger of inhaling toxic fumes.
Only open the door using the emergency release when strictly necessary.

The emergency release mechanism is located on the right beside the door lock in the gap between the door and the lid of the machine or the worktop.

- Remove the yellow door release tool from the companion pack supplied with your cleaning machine.
- Press against the door to release the emergency release mechanism.

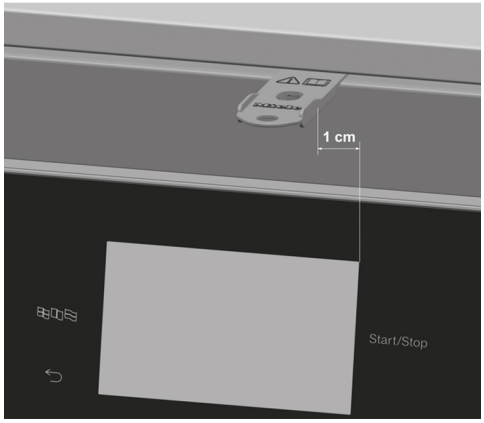

- Insert the tool horizontally into the gap between the door and the lid or worktop. The distance between the right edge of the tool and the right edge of the display must be approx. 1 cm.
- Press the tool against the release mechanism until you hear the door open. Continue to press the tool against the release mechanism and fully open the door.

If the machine is switched on, the following message is shown on the display when the emergency release is triggered:

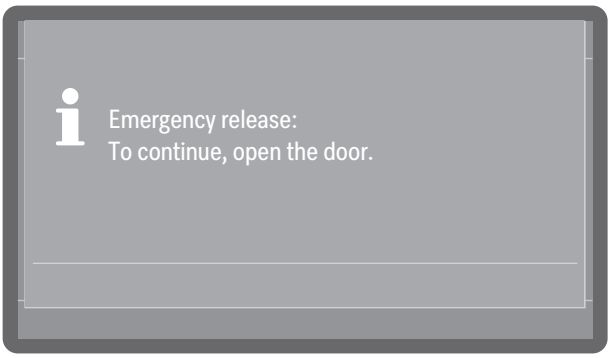

The message is acknowledged when the door is closed.

Water softening

In order to achieve excellent cleaning results, the machine requires a supply of soft water with a low calcium content. Hard mains water results in the build-up of calcium deposits on the load items and on the wash cabinet walls.

Fresh water with a water hardness of 0.7 mmol/l (4 °dH) or more must be softened. This occurs automatically while a programme is running in the built-in water softener.
The water softener must be set to the exact hardness of the mains water.

If the water hardness is greater than 9,0 mmol/l (50 °dH), the water must be softened before water intake.
For this purpose, the water connections on site must be equipped with appropriate water softening systems that provide the required minimum flow pressures for the water connections, see “Technical data”.
Determine the water hardness of the pre-softened water and set the value on the display.

Setting the water hardness

Determining the degree of hardness

You can find out the degree of hardness of the fresh water from your local water supplier.

As an alternative, you may also determine the approximate water hardness by using the test strip included with the machine.

- Take a water sample at the nearest water connection.

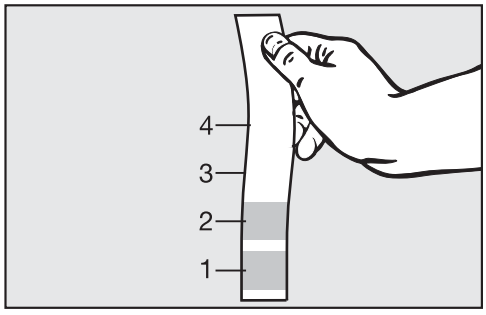

- Dip the test strip into the water for approx. 1 second. The zones of the test strip must be fully immersed.
- Remove the test strip from the water and shake the excess water off the test strip.

After approx. 1 minute, and based on the colouration, you will be able to read the water hardness.

Test strip	Water hardness	Settings on the display
4 green zones	< 3 °dH	3 °dH or lower
1 red zone	> 4–7 °dH	7 °dH
2 red zones	> 7–14 °dH	14 °dH
3 red zones	> 14–21 °dH	21 °dH
4 red zones	> 21 °dH	*)

*) Contact your local water supplier, enquire about the degree of hardness and set this on the display.

Setting the degree of hardness

With varying water hardness, always set the highest level. If the water hardness fluctuates between, for instance, 1.4 and 3.1 mmol/l (8 and 17 °dH), the water hardness must be set to 3.1 mmol/l (17 °dH).

Water hardness setting values can be found in “Settings table”.

The menu is saved under the following input path.

Extended settings

Water hardness

- Select the Water hardness menu option.

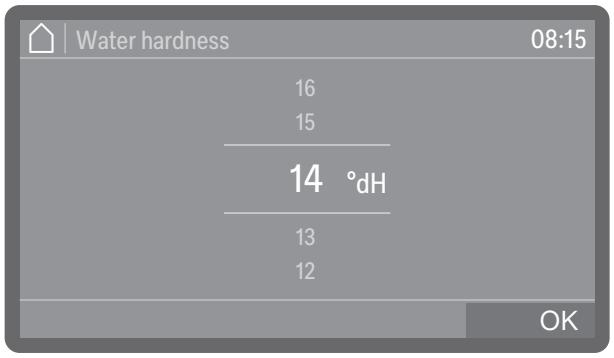

- Set the water hardness.
- Press OK to save the setting.

Settings

Water hardness can be set between 0 and 9,0 mmol/l (0–50 °dH). The water hardness is preset to 2,5 mmol/l (14 °dH) ex-works.

°dH	°f	mmol/l	**Display**
0	0	0	**0**
1	2	0.2	**1**
2	4	0.4	**2**
3	5	0.5	**3**
4	7	0.7	**4**
5	9	0.9	**5**
6	11	1.1	**6**
7	13	1.3	**7**
8	14	1.4	**8**
9	16	1.6	**9**
10	18	1.8	**10**
11	20	2.0	**11**
12	22	2.2	**12**
13	23	2.3	**13**
14	**25**	**2.5**	**14*)**
15	27	2.7	**15**
16	29	2.9	**16**
17	31	3.1	**17**
18	32	3.2	**18**
19	34	3.4	**19**
20	36	3.6	**20**
21	38	3.8	**21**
22	40	4.0	**22**
23	41	4.1	**23**
24	43	4.3	**24**
25	45	4.5	**25**

°dH	°f	mmol/l	**Display**
26	47	4.7	**26**
27	49	4.9	**27**
28	50	5.0	**28**
29	52	5.2	**29**
30	54	5.4	**30**
31	56	5.6	**31**
32	58	5.8	**32**
33	59	5.9	**33**
34	61	6.1	**34**
35	63	6.3	**35**
36	65	6.5	**36**
37	67	6.7	**37**
38	68	6.8	**38**
39	70	7.0	**39**
40	72	7.2	**40**
41	74	7.4	**41**
42	76	7.6	**42**
43	77	7.7	**43**
44	79	7.9	**44**
45	81	8.1	**45**
46	83	8.3	**46**
47	85	8.5	**47**
48	86	8.6	**48**
49	88	8.8	**49**
50	90	9.0	**50**

*) Factory default setting

Reactivation salt

The water softener must be reactivated at regular intervals. Special reactivation salt is required for this. Reactivation is carried out automatically during a programme sequence.

If the water hardness is consistently less than 0.7 mmol/l (4 °dH), salt is not required for the water softener. However, the water hardness level must still be set, see “Setting the water hardness”.

Filling the container for reactivation salt

Only use special coarse-grained reactivation salt or pure evaporated salt with a grain size of around 1–4 mm.
Never use any other kind of salt, e.g. table salt, animal feed salt or de-icing salt. Other salts may contain insoluble additives which can impair the functioning of the water softener.

⚠ Inadvertently filling the salt container with cleaning agent will always cause serious damage to the water softener.
Before filling the salt container, make sure that you have picked up the right packet of reactivation salt.

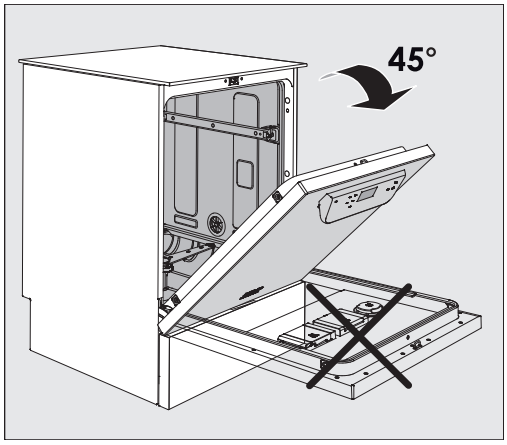

- Open the door to an angle of around 45°. This ensures that the salt flows into the container more easily.

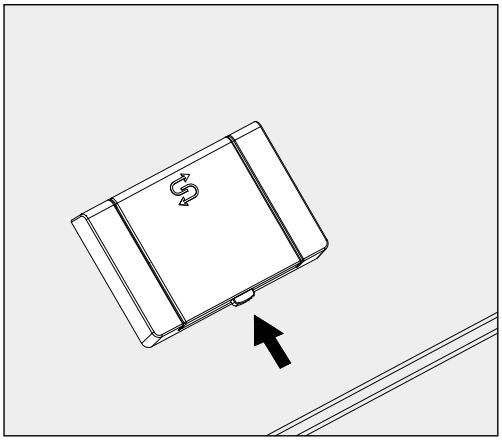

- Press the yellow locking button on the salt container. The flap will spring open.
- Open the funnel.

The container takes approx. 1.4–2 kg of salt, depending on the type of salt and the remaining fill level.

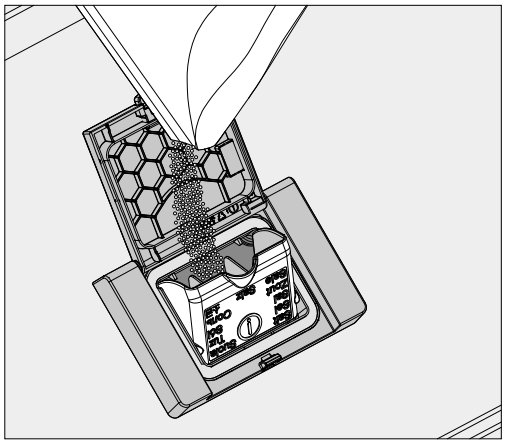

⚠ Never fill the container with water.
The container could overflow when filled with salt.

- Add salt into the container until the funnel is full but still closes easily. Do not add any more than 2 kg of salt.

As the salt container is being filled, displaced water (brine) may run out.

- Clean any excess salt from around the opening of the container, focusing especially on the container's seal. Do not use running water to rinse away salt residues as this can cause the container to overflow.
- Close the container. Make sure that the container is closed tightly so that no wash water can enter the container.

⚠ Do not force the container shut if it has been overfilled.
If an overfilled salt container is forced shut, this may damage the container.
Remove excess salt before closing the container.

- Run the Cold water rinsing programme after refilling the salt.

This will ensure that any traces of salt and brine are dissolved, diluted and rinsed away.

Excess salt and brine which has overflowed cause corrosion damage if they are not rinsed away.

Salt refill indicator

If the fill level in the salt container is low and reactivation is carried out, the following message appears on the display:

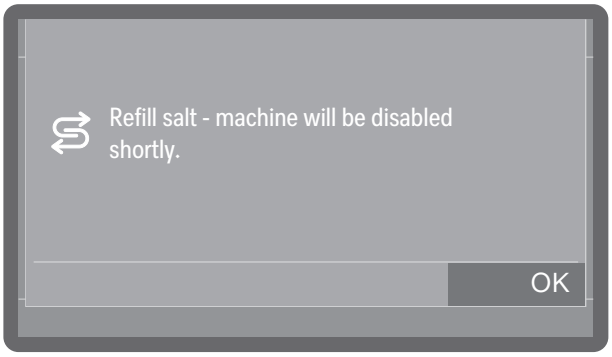

- Press OK to confirm the message.

- Top up the reactivation salt, see 📖 “Filling the container for reactivation salt”.

If the message is being displayed for the first time, further programme cycles may be possible depending on the set water hardness. If no salt is added, the message is displayed again at the end of every programme.

Reactivation notification

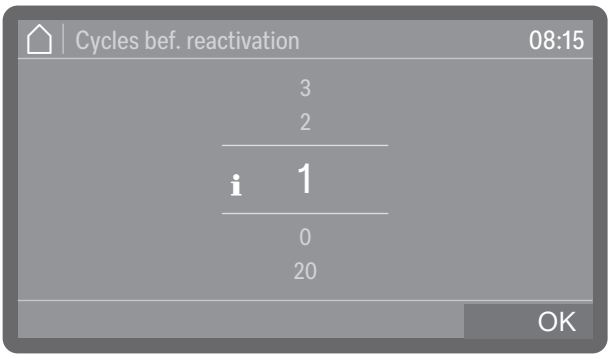

You can set how many programme cycles in advance you want to be notified of the upcoming reactivation, see ▸ ⚙ Extended settings ▸ Maintenance/Service ▸ Note reactivation.

Cancelling machine lock due to lack of salt

If the salt in the water softener has been used up, a fault appears on the display and the machine is locked to prevent further use.

- Acknowledge the fault by tapping the warning symbol.

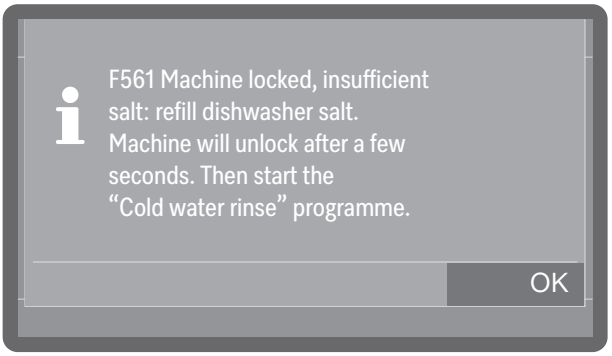

- Follow the instructions on the display and top up the reactivation salt, see 📖 “Filling the container for reactivation salt”.

The machine lock is lifted automatically with a certain delay once salt has been added.

Selecting a load carrier

This machine can be equipped with an upper and lower basket or a mobile unit which can be fitted with different inserts and modules or exchanged for special accessories depending on the load items to be washed.

Select load carriers and other accessories which are appropriate for the application.

Information on the individual areas of application can be found on the following pages as well as in the operating instructions for the load carriers (if available).

Miele offers suitable load carriers for all areas of application defined in “Appropriate use”, such as mobile units, baskets, modules, inserts and special irrigation connectors. Contact Miele for more information.

PLW 8683 Safety AirPro

Programme must not be started without lower basket.
Before starting each programme, make sure that the machine is equipped with a suitable lower basket, even if the basket is empty.
It is not permitted to operate the machine without a lower basket.

Water supply

Load carriers with spray arms or other irrigation connectors are equipped with one or several connectors for the water supply at the rear. When these are slid into the machine, the connections couple automatically with the water supply ports in the rear panel of the wash cabinet. The load carriers are held in position by the wash cabinet door when it is closed.
Unused ports in the rear panel of the wash cabinet are closed mechanically.

Height-adjustable upper baskets

Height-adjustable upper baskets can be adjusted between 3 positions with 3 cm between each position to accommodate load items of different heights.

To adjust the height, the brackets with rollers on the side of the upper basket and the water connector at the back of the basket have to be moved. The roller brackets are each secured to the upper basket by 2 screws. The water connector consists of the following components:

- A stainless steel plate with 2 openings
- A plastic connector
- 6 screws

Only adjust upper baskets horizontally. The baskets are not designed for tilting (one side up, one side down).
Adjusting the height alters the vertical clearance of the upper and lower baskets.

Setting the upper position

- Remove the upper basket by pulling it out until a resistance is felt and lifting it off the runners.
- Unscrew the roller brackets and the water connector.

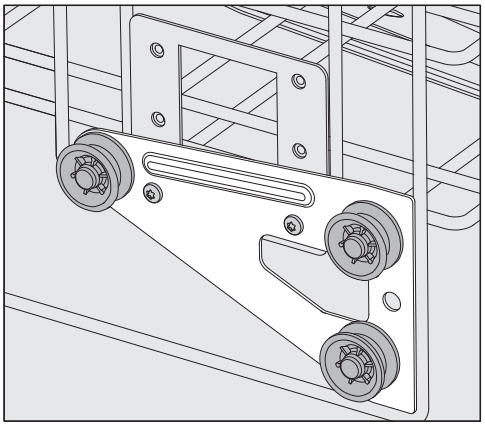

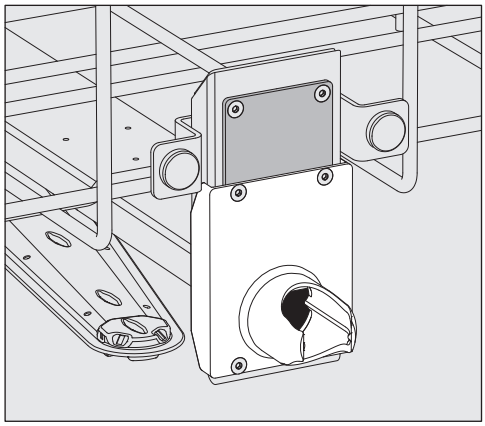

- Move the roller brackets on both sides to the lower position and screw them tight.
- Place the stainless steel plate over the openings in the water inlet pipe so that the top opening is covered. Screw the stainless steel plate to the top with 2 screws. Insert the connector into the lower opening of the stainless steel plate so that the centre opening is covered. Screw the connector on with 4 screws.

Setting the centre position

- Remove the upper basket by pulling it out until a resistance is felt and lifting it off the runners.
- Unscrew the roller brackets and the water connector.

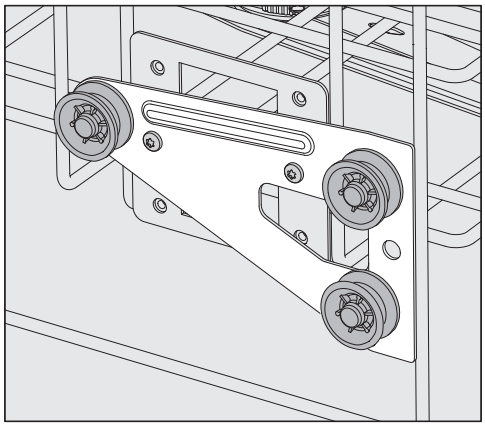

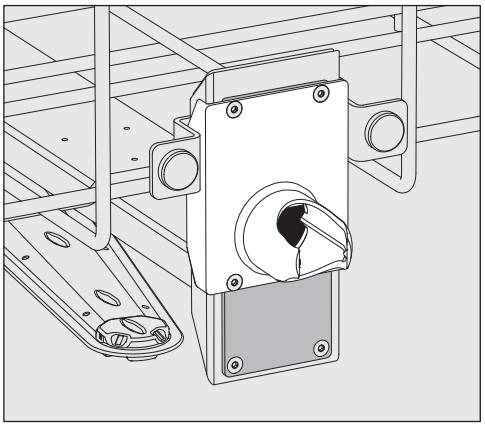

- Move the roller brackets on both sides to the centre position and screw them tight.
- Place the stainless steel plate over the openings in the water inlet pipe so that one of the outer openings is covered. Screw the stainless steel plate to the top or bottom with 2 screws. Insert the connector into the centre opening of the stainless steel plate so that the outer opening is covered. Screw the connector on with 4 screws.

Setting the lower position

- Remove the upper basket by pulling it out until a resistance is felt and lifting it off the runners.
- Unscrew the roller brackets and the water connector.

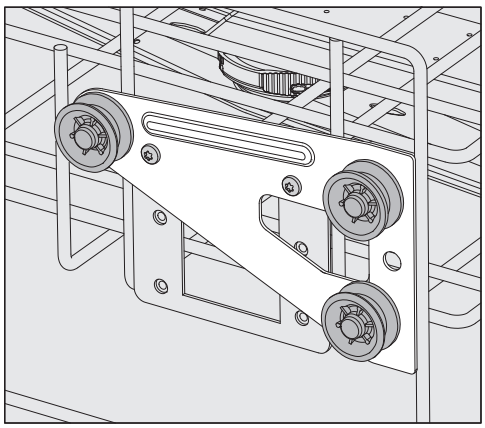

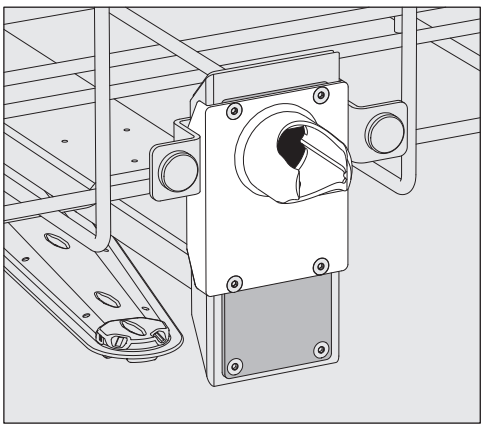

- Move the roller brackets on both sides to the upper position and screw them tight.
- Place the stainless steel plate over the openings in the water inlet pipe so that the lower opening is covered. Screw the stainless steel plate to the bottom with 2 screws. Insert the connector into the upper opening of the stainless steel plate so that the centre opening is covered. Screw the connector on with 4 screws.

Then check:

- Replace the upper basket on the rails and push it in carefully to check that the water connector is positioned correctly.

Wash pressure measurement

The wash pressure can be measured if required on all load carriers with spray arms, injector manifolds or other wash connections, e.g. during performance tests.

Test point for measuring wash pressure

On load carriers with spray arms and additional injector manifolds or other wash connections, there is a connection on the injector manifold or a wash connection for wash pressure measurement. The exact location is described in the respective operating instructions for the load carriers.

On load carriers with spray arms but without other wash connections, the test point for measuring the wash pressure can be found in the water inlet pipe for the spray arms. The test point is labelled with a ⚠ warning symbol and closed with a blind stopper.

⚠ All test points labelled with a warning symbol ⚠ are intended exclusively for wash pressure measurement.
Do not connect any load items or irrigation connectors to the test points.

Performing the measurement

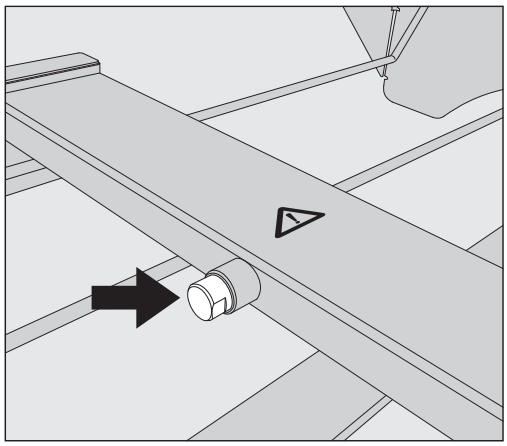

- To measure the wash pressure, replace the blind stopper with a Luer Lock adapter.

Suitable Luer Lock adapters, such as the E 447, are available from Miele.

- Carry out the measurement.
- Close the test point again with the blind stopper after the measurement.

Preparing the load

⚠ Contaminated load items pose a health risk.
Contaminated load items can result in various hazards to health, which can lead to infections, poisoning, injuries or more depending on the type of contamination.
When working with contaminated load items, ensure that all necessary measures are taken to protect personnel.
Wear protective gloves and use appropriate equipment.

⚠ Only load items which have been declared by their manufacturer as suitable for machine reprocessing may be processed. The manufacturer's specific reprocessing instructions must be observed. Breathing equipment filters and disposable items must not be reprocessed.

- Take apart any load items which can be dismantled according to the manufacturer's instructions and process the individual parts separately from each other.
- Only reprocess light load items and small parts in special lockable small parts baskets so that they are not swirled around in the wash cabinet.
- Arrange the load items so that the wash water can access all surfaces. This ensures thorough and proper cleaning.
- Do not place load items so close together that cleaning is hampered.
- Do not place load items inside other items where they may be concealed, as this will hamper cleaning.
- Lumened load items must be thoroughly cleaned, internally and externally with wash water. Special load carriers or irrigation connectors are required for this, depending on the load items.
- The spray arms must not be blocked by load items which are too tall or which hang down in their path.
- Nickel and chrome-plated load items and load items made of aluminium are not generally suitable for machine reprocessing. Special process conditions are required for these load items.
- Ferrous materials that can rust or corrode must not be introduced into the wash cabinet as load items or soiling.

Suitable load carriers and irrigation connectors as well as other accessories are available from Miele.

Preparing the load items

⚠ Danger of explosion due to flammable gases.
Flammable solvents with a flash point below 21 °C outgas and can generate a flammable mix of gases.
Only place load items into the wash cabinet that are wetted with traces of solvents at most.
Start a reprocessing programme immediately after loading.

⚠ Material damage due to solvents.
Solvents can damage the elastomers and plastics of the machine and lead to leaks.
Only place load items into the wash cabinet that are wetted with traces of solvents at most.
Start a reprocessing programme immediately after loading.

⚠ Material damage due to corrosion.
Chloride solutions, particularly hydrochloric acid, and ferrous materials that can rust or corrode cause corrosion on the stainless steel of the machine and the load carrier.
Do not introduce any chloride solutions into the wash cabinet.
Do not introduce any ferrous materials that can rust or corrode into the wash cabinet.

⚠ Contaminated load items pose a health risk.
Contaminated load items can result in various hazards to the health, which can lead to infections, poisoning, injuries and more depending on the type of contamination.
When working with contaminated load items, ensure that all necessary measures are taken to protect personnel, e.g. wearing protective gloves.

- Follow the load item manufacturer's instructions regarding pre-cleaning and pre-treatment.
- Remove soot in line with the instructions provided by the manufacturer of the load items.
- Disassemble the load items according to the instructions of the load item manufacturer.
- Place small parts and micro components in suitable small parts baskets to secure them.

Observe the colour coding.
The positions on the load carriers and the compartments of the small parts baskets can be colour-coded, e.g. using labels, to enable clear assignment of small parts to larger load items.

Checks before starting a programme

Carry out a visual check before starting every programme:

- Are the load items correctly loaded and connected for cleaning?
- Was the recommended loading template followed?
- Have the compressed air systems for reprocessing air regulators been supplied with enough compressed air?
- Are the spray arms clean and do they rotate freely?
- Is the filter combination clean and securely fitted?
  Remove any coarse soiling and clean the filter combination if necessary.
- Are the load carriers with spray arms or nozzles, irrigation sleeves and other irrigation connectors correctly connected to the water supply?
- Are all process chemical containers sufficiently filled?

After reprocessing

The supervisor must verify and document the results of the reprocessing procedure.
This includes final checks of the cleaning results for each cycle and assessment of the applied and achieved process parameters.

You can create checklists, for example, to document the cleaning results.

Carry out maintenance, care and functional checks.
After reprocessing, carry out all maintenance and care measures specified by the manufacturers of the load items as well as the necessary functional tests.

Tests

Check the following at the end of every programme:

- Have the compressed air systems been supplied with enough compressed air after reprocessing?
- Have any medium-pressure hoses become disconnected from the quick-release couplings of the pressure chambers?

⚠ Danger to health
If the pressure supplied to air regulators during reprocessing is too low or if hoses have disconnected from the quick-release couplings, wash water and particles can get inside the air regulators. The wash water may contain cleaning agents and disinfectants that are harmful to health.
In both cases, the air regulators must be rinsed and dried internally in line with the manufacturer's instructions before being used again.

- Carry out a visual check of the load items for cleanliness.
- If the machine is equipped with a drying unit, carry out a visual check of the load items for dryness.

Air regulators

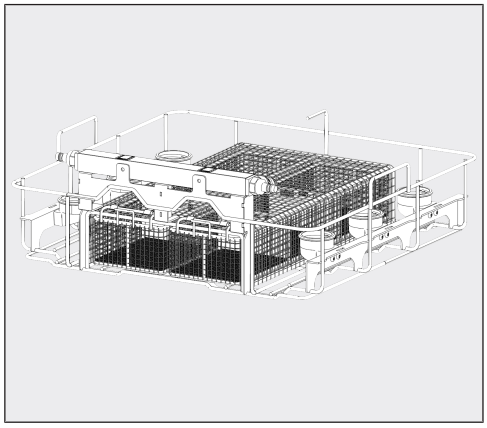

APLW 342

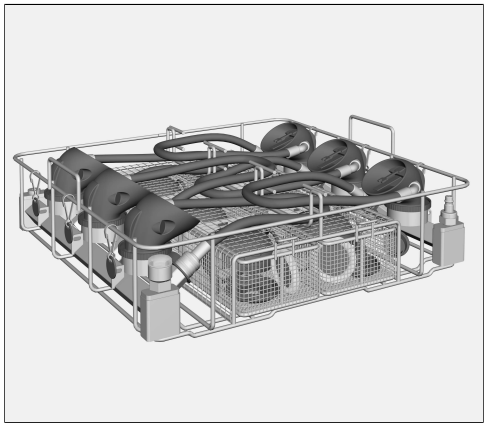

APFD 200

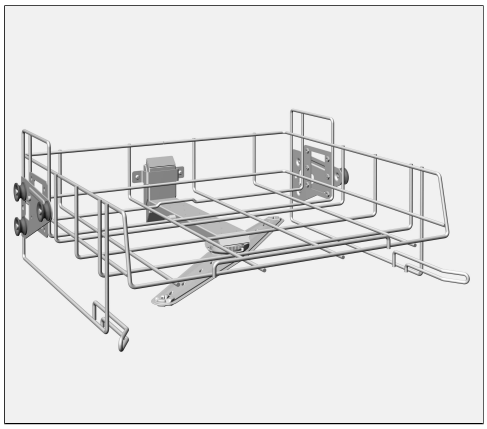

A 101

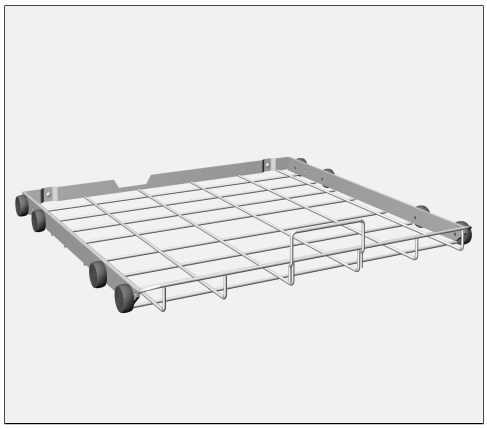

A 151

Special inserts are required for reprocessing air regulators, e.g. the APLW 342 or APFD 200 insert. The inserts can be used together with the A 101 upper basket or the A 151 lower basket.

The inserts can be supplied with compressed air.

- **APLW 342**: The insert is connected to the machine's own compressed air connection. This allows up to 2 inserts to be supplied with a constant supply of compressed air.
- **APFD 200**: The insert is pressurised with compressed air once before each programme starts. This insert is not designed for connection to a constant supply of compressed air.

When using the APFD 200 insert in the upper basket, the medium-pressure hose in the wash cabinet must be either secured to prevent it from whipping around or disconnected from the quick-release coupling in the wash cabinet ceiling.

The inserts are supplied with their own operating instructions.

After reprocessing

- Check that all hoses are still connected to the quick-release couplings.
- Check that there is enough pressure in the load carriers. To do this, follow the instructions in the operating instructions for the inserts.

- **APLW 342**: Using the customer's pressure monitoring system, check to ensure that the required medium pressure is present, see "Technical data". On each air regulator, activate the valve and check whether you can hear compressed air escaping.
- **APFD 200**: Check that the compressed air indicator on the insert shows the required minimum pressure.

If the pressure is too low or the hoses have disconnected from the quick-release couplings, the wash water can enter the air regulators. In this case, the air regulators must be rinsed and dried internally in line with the manufacturers' instructions before further use.

⚠ Risk of injury.
When the quick-release couplings are disconnected, the escaping compressed air can cause the hose to whip around uncontrollably. The adapter at the end of the hose could injure you.
Hold the hose adapter firmly so that it is not whipped around by the escaping compressed air.

- Disconnect the hoses by pulling back the collars on the quick-release couplings.
- Remove the air regulators and empty any remaining water into the wash cabinet or an on-site slops basin before removing items.
- Follow the air regulator manufacturers' instructions regarding drying, assembly and replacing wear parts.

Before the air regulators are reused following reprocessing, function checks must be carried out in accordance with the air regulator manufacturers' specifications.

Breathing masks

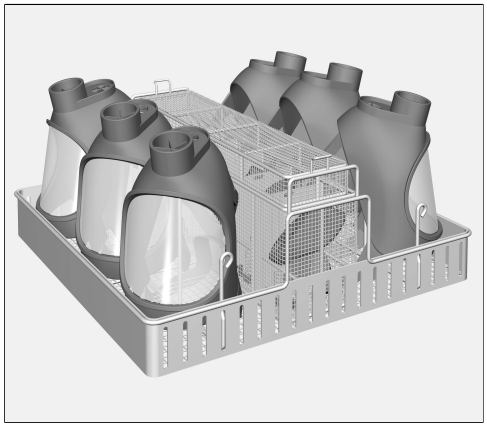

APFD 201

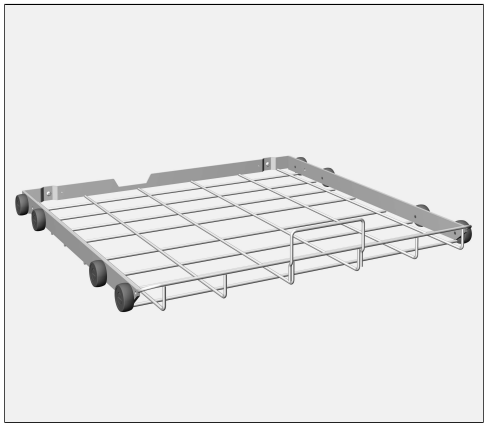

A 151

The APFD 201 insert combined with the A 151 lower basket carrier is intended for reprocessing breathing masks. For this, the masks are pushed onto the holders on the insert.

When using this insert, the medium-pressure hose in the wash cabinet must be either secured to prevent it from whipping around or disconnected from the quick-release coupling in the wash cabinet ceiling.

After reprocessing

- Remove the breathing masks and empty any remaining water into the wash cabinet or an on-site slops basin before removing items.
- Follow the breathing mask manufacturers' instructions regarding drying, assembly and replacing wear parts.

Before the breathing masks are reused following reprocessing, function checks must be carried out in accordance with the breathing mask manufacturers' specifications.

Carrier frames for compressed air units

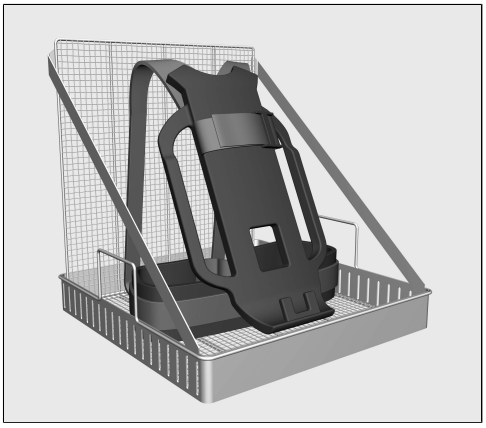

APFD 203

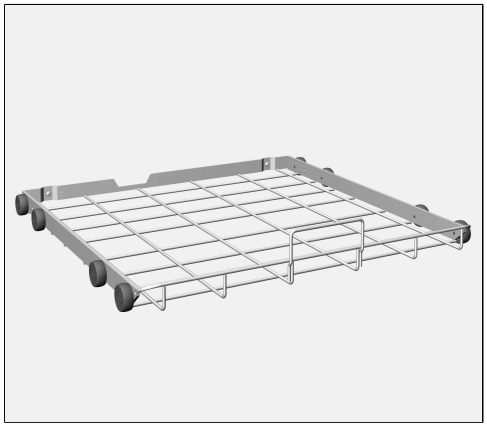

A 151

The APFD 203 insert combined with the A 151 lower basket carrier can be used for reprocessing carrier frames for compressed air units.

When using this insert, the medium-pressure hose in the wash cabinet must be either secured to prevent it from whipping around or disconnected from the quick-release coupling in the wash cabinet ceiling.

After reprocessing

- Remove the carrier frame and empty any remaining water into the wash cabinet or an on-site slops basin before removing items.
- Following the carrier frame manufacturer's instructions regarding drying and maintenance.

A function check on any pneumatic or electronic components, such as pressure indicators, must be carried out in line with the manufacturer's instructions before the carrier frame can be used again after reprocessing.

Process chemicals

⚠ Unsuitable process chemicals pose a health risk.
Using unsuitable process chemicals will generally cause an unsatisfactory reprocessing result and can pose a health risk or cause damage to property.
Only use process chemicals designed specifically for use in this machine and follow the manufacturer‘s instructions on their use.
Please carefully observe any instructions relating to non-toxic residues.

⚠ Process chemicals pose a health risk.
Some process chemicals may be corrosive and irritant.
Observe the relevant safety regulations and safety data sheets issued by the process chemical manufacturers when handling process chemicals.
Take all protective measures required by the process chemical manufacturer, e.g. wear protective goggles and protective gloves.

⚠ Risk of damage to the load items.
Programme parameters, such as the temperature or the dispensing concentration of the process chemicals, can have a damaging effect on the individual load item materials under some circumstances.
Observe the parameters specified by the relevant manufacturer for reprocessing the load items and adjust the programme if necessary.
Consult the load item manufacturer or Miele Customer Service if necessary.

Highly viscous (thick) process chemicals can affect the dispenser monitoring and lead to inaccurate data. In this instance, please contact Miele Customer Service for advice.

Contact Miele for information about suitable process chemicals.

The safety data sheets for the process chemicals must be easily accessible during operation of the machine.

Neutralising agent

Neutralising agent is dispensed via an internal dispensing system.

Neutralising agent (pH setting: acidic) neutralises residues of alkaline cleaning agents on the surface of the load items.

Cleaning agent

The machine is only designed for use with liquid cleaning agents. Liquid cleaning agent is dispensed from an external canister via a suction lance.

For cleaning specific types of soiling, and for information on the optimum cleaning agents and additives to use for liquid dispensing, please contact Miele Customer Service.

Dispensing systems

The machine is designed for dispensing the following process chemicals:

- Cleaning agent
  Depending on the equipment variant, liquid cleaning agents are dispensed via an internal dispensing system or with the aid of an external dispensing module.
- Neutralising agent
  Dispensing is carried out using a suction lance from a canister.
- Additional media
  Additional liquid process chemicals can be dispensed via external dispensing modules.

If required, the dispensing system for neutralising agents can also be used for other process chemicals. If necessary, please consult Miele Customer Service. You can customise the name of the dispensing system as required, see ▸ ⚙🔒 Extended settings ▸ Maintenance/Service ▸ Dispensing systems ▸ Neutralising agent ▸ Change name.

Colour coding of suction lances

Liquid process chemicals from external canisters are dispensed via suction lances. Colour coding can be helpful for correct dispensing.

Miele uses and recommends the following:

- Blue: for cleaning agent
- Red: for neutralising agent
- Green: for chemical disinfectant or an additional second cleaning agent
- White: for acidic process chemicals
- Yellow: for free choice

Dispensing modules

If required, additional external dispensing modules (DOS modules) for liquid process chemicals can be retrofitted. The number of connections varies depending on the equipment variant.

External dispensing modules are fitted by Customer Service. Internal dispensing systems cannot be retrospectively fitted.

Connecting dispensing modules

The dispensing modules are supplied with installation instructions.

2 DOS module connections

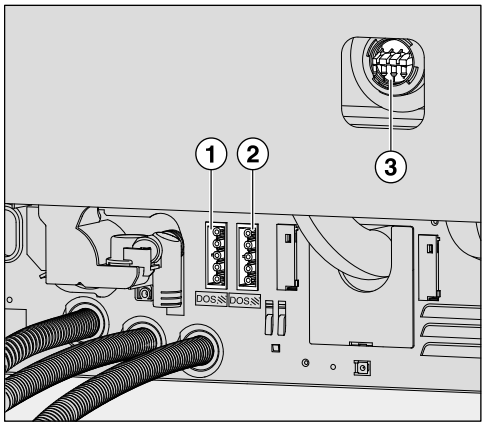

① Power supply connection

② Power supply connection

③ Connections for dispensing hoses

1 DOS module connection

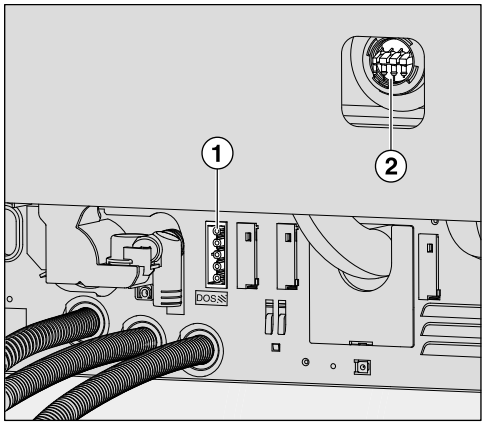

① Power supply connection

② Connection for dispensing hose

The dispensing modules are controlled via the power supply. Pay attention the labelling of the connections.

- DOS 1 Cleaning agent
- DOS 4 Additional media
  Connection is activated by Customer Service if required.

- Connect the power supply.
- To connect the dispensing hoses, release the hose clip on a free connector and remove the protective cap.
- Push the dispensing hose onto the connector and secure it with a hose clip.

Unused connectors for dispensing hoses must be blanked off with protective caps to prevent the leakage of wash water.

Replacing the canister

⚠ Risk of damage due to unsuitable cleaning agents.
Using unsuitable cleaning agents, such as a cleaning agent for a domestic dishwasher, will mean that the reprocessing result is not as expected.
Only use cleaning agents suitable for reprocessing air regulators and breathing masks.

When the fill level in the canister is low, you are reminded to change the canister:

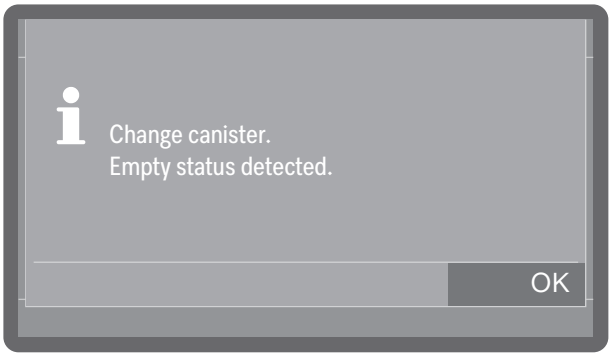

- Press OK to confirm the message.

Once the supply has been used up, the machine is locked to prevent further use.
The lock is lifted some time after the canister has been replaced.

Only replace empty canisters with canisters containing the appropriate process chemicals.
The reprocessing results are sometimes significantly impaired by dispensing the wrong process chemicals in the programme blocks. In addition, mixing different process chemicals in the dispensing system can lead to unexpected chemical reactions.
Observe the colour coding of the suction lances.

- Take the canister and place it on a robust and easy-to-clean surface, e.g. the wash cabinet door.
- Take the lid off the canister and remove the suction lance.
- Place the suction lance on a robust and easy-to-clean surface, e.g. the wash cabinet door.

- Replace the empty canister with a full one.

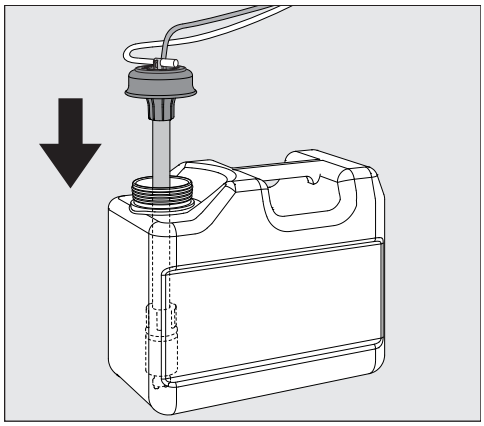

- Push the suction lance into the opening of the canister and secure the lid.
- Feed the suction lance into the canister until it reaches the bottom.
- Wipe up any spilled process chemicals thoroughly.
- Place the canister on the floor next to the machine or in an adjacent cabinet. The canister must not be placed on top of or above the machine. Ensure that the dispensing hose is not kinked or trapped.

When replacing the canisters, air can get into the dispensing system and lead to inaccurate dispensing. For this reason, we recommend that you refill the dispensing system after changing the canister.

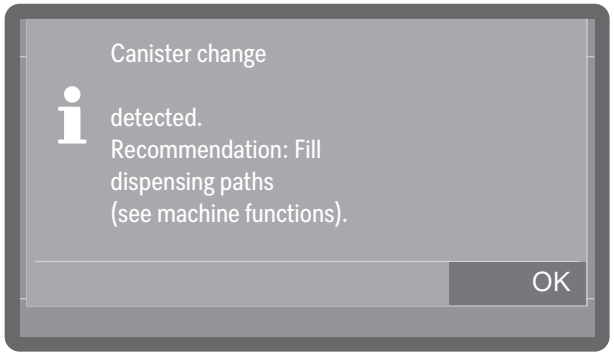

- Confirm the message by pressing OK.
- To fill the dispensing system, select the corresponding dispensing system at ▸ [⚙] Machine functions ▸ Dispensing paths ▸ Fill dispensing paths and start the process. The system is filled automatically.

Selecting the canister volume

Available for cleaning machines with fill level measurement.

If a suction lance for a 10 l container is used in a smaller container or if a large container is only about half full, the following prompt appears on the display of cleaning machines that measure the fill level in the canisters (factory-fitted equipment variant):

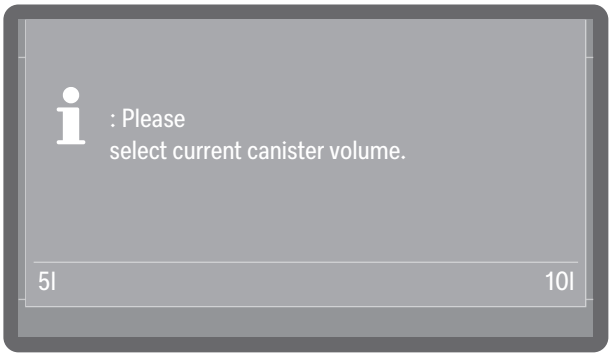

- Select the canister size.

Setting the dispensing concentration

The dispensing concentration is set at ▸ ⚙ Extended settings ▸ Maintenance/Service ▸ Dispensing systems.

Selecting a programme

Always select the programme depending on the type of load and degree and type of soiling, or on infection prevention issues.

- You can find a list of all programmes along with application descriptions in “Programme overview”.
- All released programmes are available for selection.
- The order of the programmes can be changed as required.

Tip: To release or block programmes, see
▸ Extended settings ▸ Programme options ▸ Release programmes.

Tip: To change the order of the programmes, see ▸ Extended settings ▸ Programme options ▸ Set favourites.

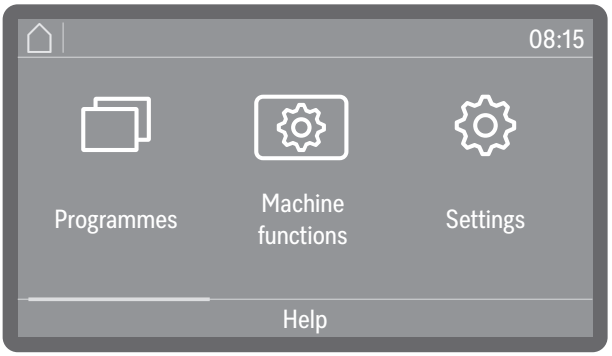

■ Tap Programmes and select a programme from the list, see “Programme overview”.

As soon as you have selected a programme, the *Start/Stop* sensor control starts to flash.

Use the ⮌ sensor control to return to the programme selection screen before the programme starts, e.g. to select a different programme. This is no longer possible once the programme has started.

Programme information

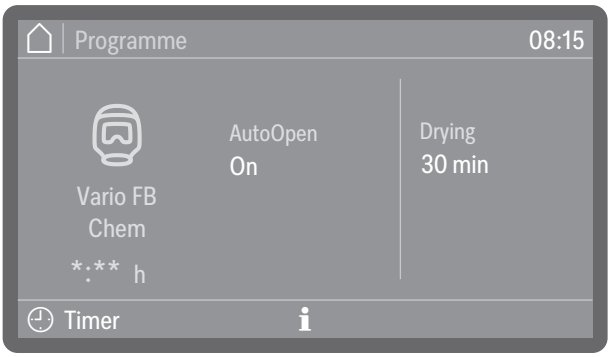

(:** Programme running time varies depending on configuration)*

In the programme display, you can use the information symbol ℹ to call up information about the programme or, while a programme is running, information about the current wash block.

Starting a programme

Selecting and deselecting additional functions

Available for cleaning machines with active drying and motorised door opener.

Before starting the programme, you can activate or deactivate the additional functions that are displayed to the right of the programme name by tapping them.

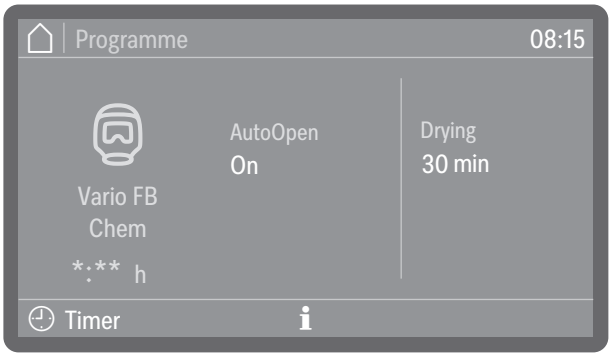

(:** Programme running time varies depending on configuration)*

Activated functions are highlighted in colour. The type and number of additional functions vary depending on the programme and machine features.

AutoOpen

AutoOpen is an additional assisted drying function. At the end of a programme, the door opens slightly to allow residual moisture to escape from the wash cabinet more quickly.

The door is opened as soon as the temperature in the wash cabinet has dropped below a certain value. Before the door is opened, a corresponding message is shown on the display and a buzzer sounds if buzzers are activated.

Drying

If the drying time (▸ Drying time 2) is set as changeable (▸ Time changeable?: Yes) in the programme settings, the drying time set can be altered. If the drying time is set as not changeable (▸ Time changeable?: No), the preset time applies, see ▸ ⚙ Extended settings ▸ Programme options ▸ Configure programmes ▸ Drying ▸ Drying time 2 ▸ Time changeable?.

When the drying function is activated, the programme running time is extended.

Starting a programme immediately

- Press the *Start/Stop* sensor control (the LED of the *Start/Stop* sensor control will light up).

Once a programme has been started, it can no longer be changed. You can interrupt a programme that is in progress, see 📖 “Interrupting a programme”, or end it prematurely by cancelling it, see 📖 “Cancelling a programme”.

Starting the programme using a timer

The start of a programme can be delayed, for example, to benefit from economy rates of electricity at night. You can set a start time at which the programme should start (Start at) or a finish time by which the programme should end at the latest (Finish at). The times depend on the set time of day.

Tip: To set the time of day, see ▸ Extended settings ▸ Date/ Time ▸ Time.

Setting the timer

■ Select a programme.

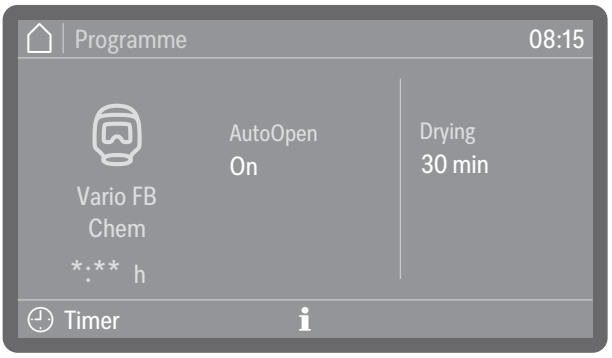

(:** Programme running time varies depending on configuration)*

■ Tap Timer.

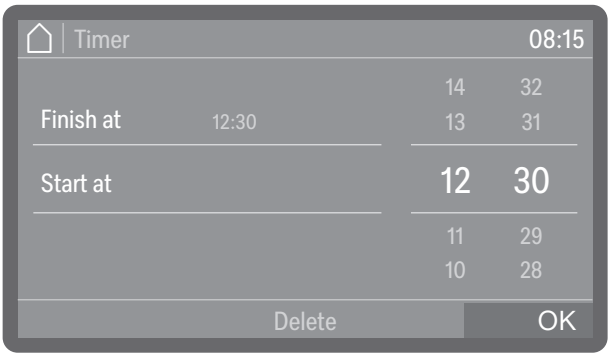

■ Select the start time (Start at) or finish time (Finish at).

■ Set the time.
Selecting Delete allows you to delete the entries.

■ Press OK to confirm your entries.

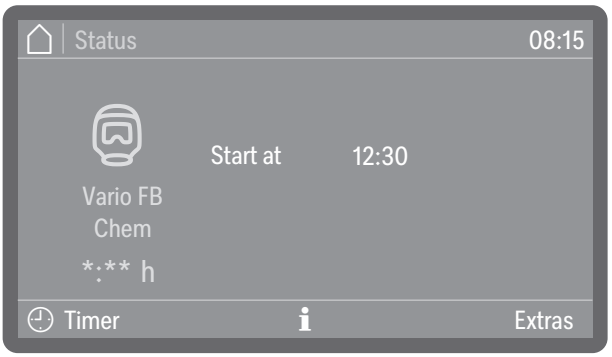

(:** Programme running time varies depending on configuration)*

This activates the timer. Depending on the programme, you can add or remove additional functions for the next programme cycle via Extras, see “Selecting and deselecting additional functions”. Some time after the last input, the machine switches to Standby mode until the programme starts.

Changing the timer

- Tap ⏲ Timer.
- Re-enter the start or finish time.

Deleting the timer

- Press the *Start/Stop* sensor control.

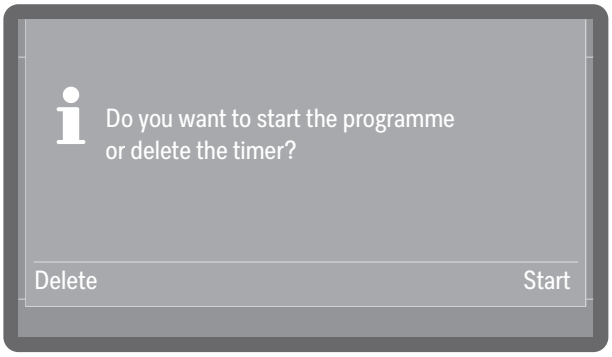

You will then be asked whether you want to start the programme immediately (Start) or whether you want to delete the timer (Delete).

- Select an option.

Tip: Alternatively, you can switch off the machine by pressing the ⏻ On/Off sensor control, which automatically deactivates the timer.

Programme sequence indicator

Once a programme has started, the display shows the programme name, the name of the current wash block and the time left until the programme is finished.

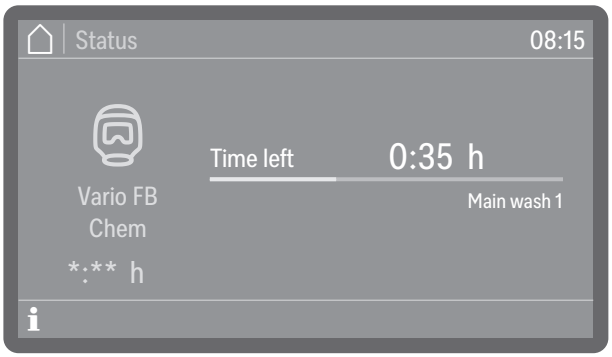

(:** Programme running time varies depending on configuration)*

During the programme sequence, programme information can be called up by tapping the information symbol ℹ.

Only the parameters that are set for the wash block that is currently in progress are shown, e.g.:

- Temperature as actual value and setpoint if a temperature has been specified for the wash block
- Holding time as actual value and setpoint if a holding time has been set
- Cycle number
- Drying as setpoint and actual value (equipment variant)

End of programme

After a programme has ended normally, the LED of the *Start/ Stop* sensor control will go out and the following will appear on the display:

The door sensor control starts to light up to indicate that the door can be opened.

In addition, a buzzer sounds for approx. 3 seconds and is repeated 3 times every 30 seconds.

Tip: The buzzer settings can be found at ▸ Settings ▸ Volume ▸ Buzzer tones.

Acknowledging the end of the programme

■ Tap the display to acknowledge the end of the programme.

If system messages are pending at this time, these are then output, e.g. if a lack of salt or process chemicals has been detected or a notification regarding when the next maintenance is due. Every message needs to be acknowledged individually by pressing OK.

Displaying programme information

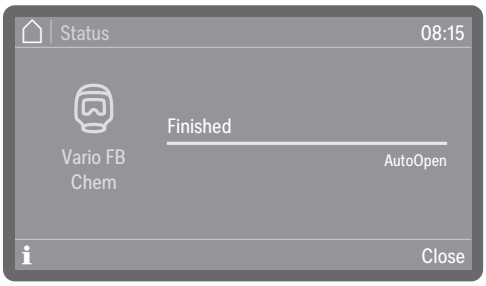

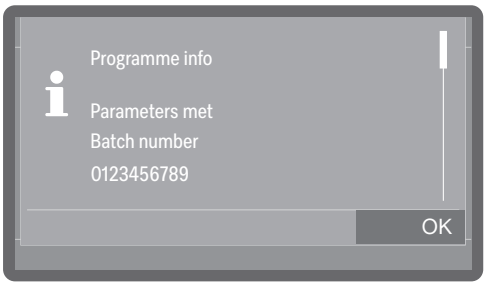

At the end of the programme, tap the information symbol i to call up programme information, e.g.:

- Parameters met
- Cycle number
- Spray arm speed as OK (OK) or Not OK (not OK) if monitoring is active
- Wash pressure as OK (OK) or Not OK (not OK) if monitoring is active

If ▸ Batch control is activated, the cycle must first be documented on the display before the programme information can be displayed.

Batch control

If you carry out batch controls, you can document the results in the cycle protocols of the machine. For this purpose, the function must be activated and a user ID must be set up for each authorised operator, see ▸ ⚙ Extended settings ▸ Programme options ▸ Batch control.

If batch control is activated on the machine, the cleaning results of the completed programme must first be documented before the next programme can be started.

Carrying out batch control

- Acknowledge the end of the programme.
- Tap on the information symbol ℹ and check whether the displayed parameters are as expected.
- Open the door, remove the load items and carry out all the necessary checks to verify the cleaning results, e.g. visual checks.
- Close the door and document the result on the display.

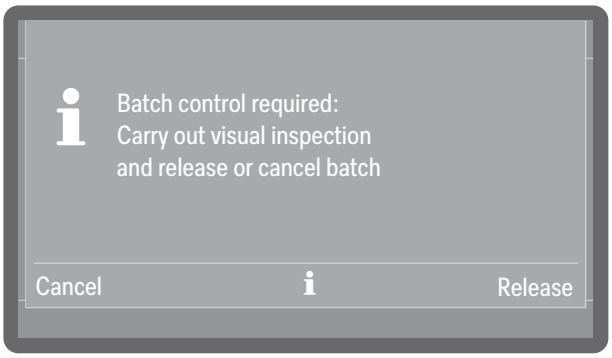

- Release

  The cleaning results meet expectations.

- Cancel

  The cleaning results are inadequate.

Do not continue to use load items from cancelled cycles.
The load items must either be reprocessed or disposed of.

- Select one of the options.

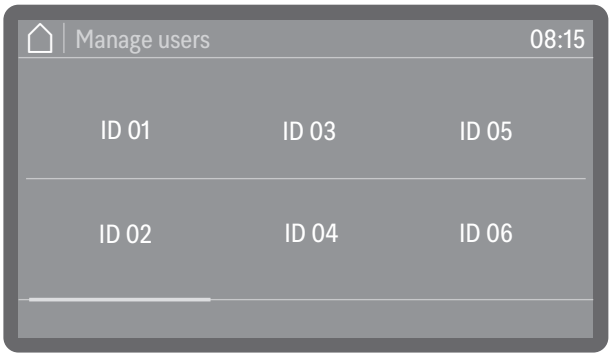

- Select your user ID.

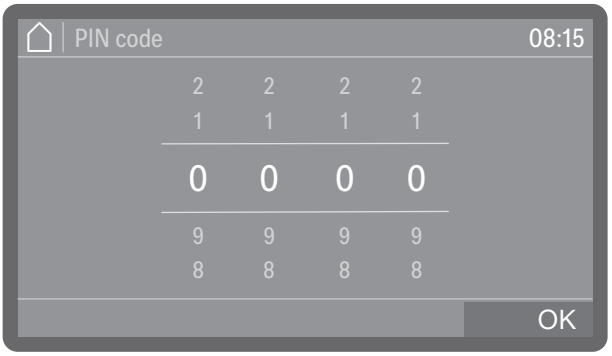

■ Enter your personal PIN code, see “PIN code”.

If the PIN code is repeatedly entered incorrectly, the process will be cancelled and the result will not be documented. Instead, the failed result documentation will be recorded in the cycle protocol.

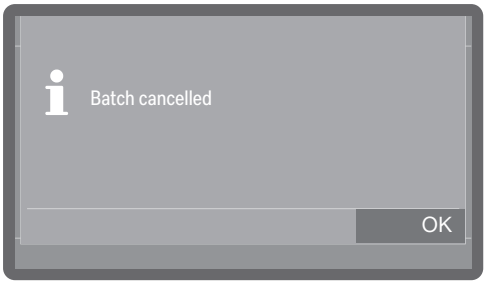

■ Press OK to confirm the result of the batch control.

The cleaning results will be documented in the cycle protocol together with the user ID.

Personal PIN codes must not be shared.
The PIN code identifies the owner of the user ID at the machine. If the personal PIN code becomes public knowledge, it is no longer possible to trace which operator used the user ID for the documentation.

Interrupting a programme

A programme that is in progress may only be interrupted if strictly necessary, e.g. if the load items are moving significantly. To interrupt the programme, the door of the wash cabinet must be opened.

Tip: The option to interrupt a programme must be enabled, see ▸ Extended settings ▸ Programme options ▸ Programme interruption.

■ To open the door, press the door sensor control.

If the door lock is activated, you must first enter the PIN code to unlock the door, see ▸ Extended settings ▸ Programme options ▸ Door lock code. If the lock is deactivated, you can open the door without entering a code. If you cancel the process, do not enter a PIN code or enter an incorrect PIN code, the programme will continue without interruption.

■ Enter the door lock code.

If the temperature in the wash cabinet exceeds 60 °C, a message is shown on the display:

Hot wash cabinet: Risk of injury, take care when opening the door.

- Acknowledge the message by pressing the door sensor control again.

The door is then unlocked and the comfort door lock opens the door slightly.

- Rearrange the load items so that they are stable.
- Close the door to continue the programme.

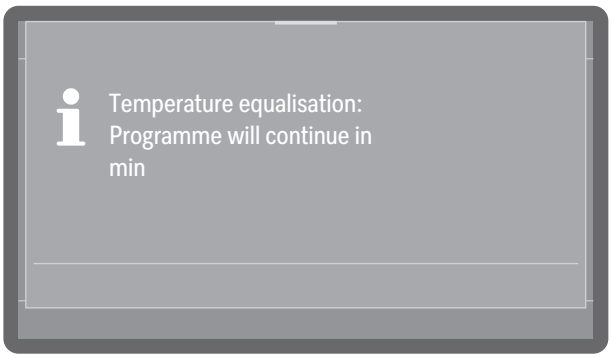

If the temperature inside the wash cabinet is more than 60 °C at this point, the pressure is equalised first. Then the programme continues.

Cancelling a programme

If a programme is cancelled, the load items must be reprocessed again.

⚠ Danger of scalding, burning and chemical burns due to hot load items, wash water or escaping vapours.
The load items and the wash cabinet may be very hot. Hot wash water or steam may also escape.
Be careful when opening the door. Open the door slowly and do not stand in the rising vapours.

Programme cancelled due to a fault

The programme stops and a fault message appears on the display.

- Take appropriate steps to resolve the fault, depending on its cause, see “Problem solving guide”.

Cancelling a programme manually

A programme that is in progress may only be cancelled if strictly necessary, e.g. if the load items are moving significantly.

- Press the *Start/Stop* sensor control.

The following will appear on the display:

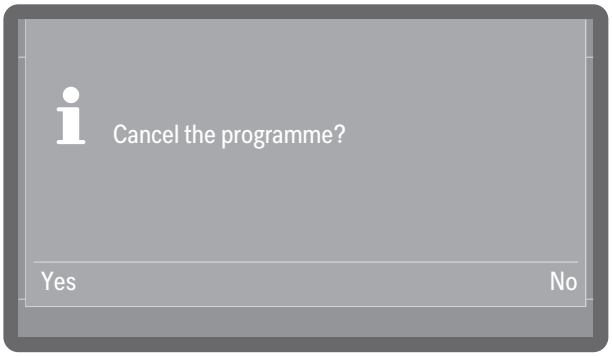

- Select Yes to cancel the programme.

Tip: A PIN code may still need to be entered. To enter the PIN code, see “Entering the PIN code”. To set up the PIN code lock, see ▸ Extended settings ▸ Programme options ▸ Door lock code.

The programme will only be cancelled when Yes is confirmed. If no button is pressed for several seconds, or if the process is cancelled using the sensor control, the display will revert to the programme sequence display.

The following message will appear on the display:

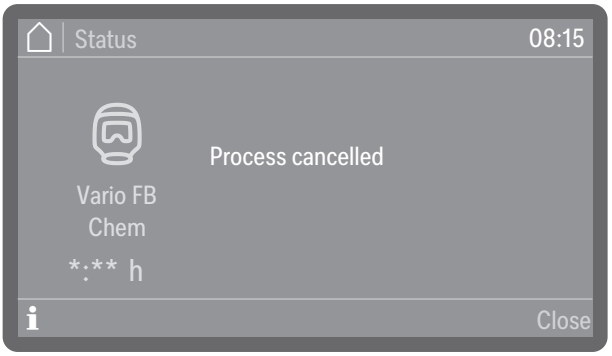

The door must be opened to acknowledge the message. Open the door a little.

Restarting a programme

■ Restart the programme or select a new programme.

Menu structure

The Machine functions menu includes relevant functions to support daily routine tasks.

The factory settings are indicated by a tick ✓. A description of how to configure settings is provided after the overview.

- Machine functions
  - Filter interval
    - Filter combination *1)
    - HEPA filter *2)
  - Dispensing paths
    - Fill dispensing paths
    - Rinse dispensing paths
  - AutoClose
    - Off
    - On ✓
  - Documentation
    - Last report
    - Selected reports

*1) Visible if the interval is activated, see ▸ Extended settings ▸ Maintenance/Service ▸ Filter maintenance.

*2) Available for machines with active drying

Filter interval

The machine is equipped with several filters and a filter system, subsequently referred to as filters, which require regular maintenance. Reusable filters must be cleaned and disposable filters replaced.

For more information on cleaning or replacing the filters, see “Maintenance”. Reusable filters used in load carriers have their own operating instructions and cleaning instructions.

You can use the following menu to display the remaining time left or cycles of the filters and reset the counter after a filter has been changed or cleaned.

The menu is saved under the following input path.

Machine functions
- Filter interval
  - Filter combination
  - HEPA filter

■ Select a filter.

- Remaining filter cycles or Remaining time filter (depending on the type of filter selected)

  Displays the remaining programme sequences (cycles) or operating hours until the next maintenance (cleaning or replacement)

- Reset interval

  Resets the counters for the filter cycles

⚠ The intervals must only be reset once the filters have been cleaned or replaced.

■ Select an option.

Dispensing systems

The dispensing systems for liquid media can only dispense reliably if the dispensing system has been purged of air and contains no deposits.

Filling dispensing paths

The dispensing systems need to be topped up in the following situations:

- If the dispensing system is being used for the first time.
- If air has been sucked in or the system has been drained.
- If canisters for liquid media have been changed or refilled.

Before filling the dispensing paths, make sure that the canisters are full and that the suction lances are screwed securely to the canisters and that they cannot suck in air.

The menu is saved under the following input path.

Machine functions
Dispensing paths
Fill dispensing paths

- Select the Fill dispensing paths menu option.
- Select the dispensing system that you want to fill.

You will then be asked if you want to start the filling process:

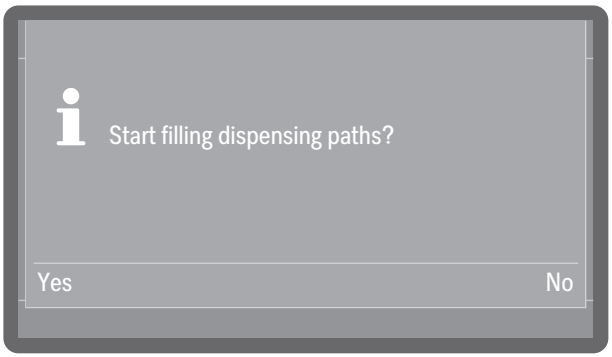

- Yes

  Starts the process. The dispensing system is filled automatically. The message Filling of dispensing paths completed is displayed following successful completion. If filling is interrupted prematurely, the process must be repeated.

- No

  Cancels the process without filling the dispensing system.

- Select an option.

Rinsing dispensing paths

A dispensing system must be rinsed in the following situations:

- If a dispensing system was accidentally filled with the wrong medium.
- If deposits have formed in the dispensing paths or in the canisters which could completely or partially clog the systems. Deposits can form, for example, after long periods of downtime or when the canisters are refilled instead of being replaced.

■ Fill a clean container, e.g. a bucket, with clean water.

⚠ Damage to the dispensing system.
Small foreign objects in the water, such as sand, fluff or similar, can be sucked in by the dispensing system and may clog or damage it. Make sure that there are no foreign objects in the water.

The menu is saved under the following input path.

Machine functions
Dispensing paths
Rinse dispensing paths

■ Select the Rinse dispensing paths menu option.

■ Select the dispensing system that you want to rinse.

The message Place the suction lance in a bucket with water. is then displayed.

■ Place the suction lance in the container with water. The lower end of the suction lance with the suction opening must be thoroughly rinsed.

■ Secure the suction lance so that it cannot tip over or fall out of the container.

■ Press OK to confirm the message.

You will then be asked if you want to start the process:

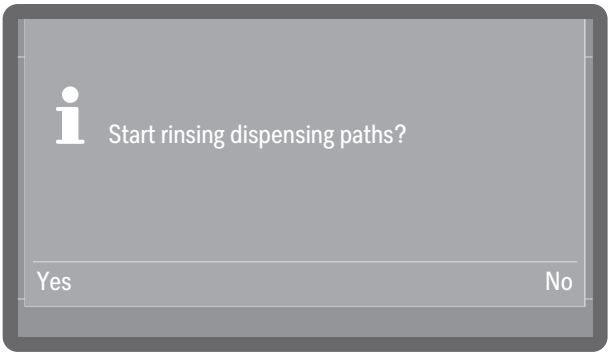

- Yes

  Starts the process. The dispensing system is rinsed automatically. The message Rinsing of dispensing paths completed is displayed following successful completion. If rinsing is interrupted prematurely, the process must be repeated.

- No

  Cancels the process without rinsing the dispensing system.

■ Select an option.

AutoClose

Valid for cleaning machines with automatic door opener.

This can be used to determine whether the door should be drawn into the final closed position by the automatic door lock immediately after closing or whether it should remain slightly open.

In its final closed position, the door is mechanically locked and can be unlocked and opened again by pressing the door button ⊶.

The menu is saved under the following input path.

Machine functions

AutoClose

■ Select the AutoClose menu option.

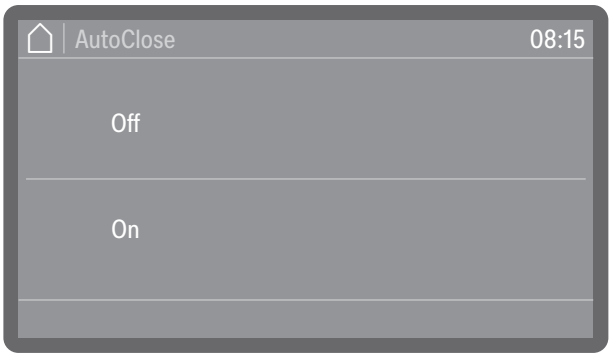

- On

  AutoClose is activated for all programmes. The door is drawn into the final closed position and locked immediately after closing.

- Off

  AutoClose is deactivated for all programmes. The door hooks into the latch and can be pulled open again without pressing the ⊶ sensor control.

■ Select an option.

Documentation

Internally stored protocols can be output retrospectively from the machine. To do this, the machine must be connected to a network or to a printer, see ▸ WiFi / LAN.

The menu is saved under the following input path.

Machine functions

Documentation

■ Select the Documentation menu option.

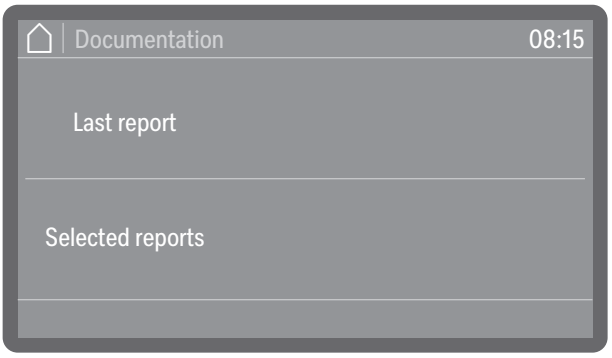

- Last report

  The last cycle protocol is output again.

- Selected reports

  You can select individual protocols from the last protocols and have them displayed.

■ Select an option.

Menu structure

Basic parameters for machine control are stored in the Settings menu.

The factory settings are indicated by a tick ✓. A description of how to configure settings is provided after the overview.

- Settings
  - Display brightness
  - Volume
    - Buzzer tones
    - Keypad tone
  - Welcome tone
    - Off
    - On ✓

Display brightness

You can also set the brightness of the display.

The menu is saved under the following input path.

- Settings
  - Display brightness

■ Select the Display brightness menu option.

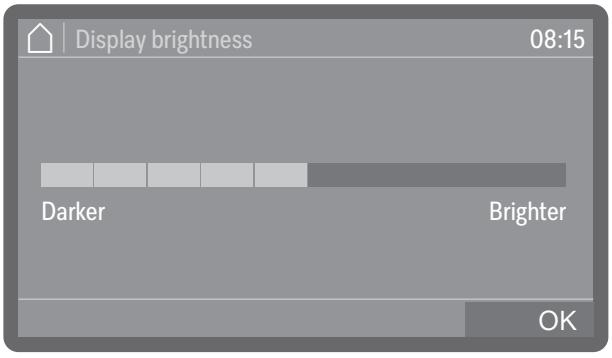

■ Adjust the brightness of the display and press *OK* to save the setting.

Volume

An acoustic signal transmitter is integrated in the control panel, which can provide acoustic feedback in the following situations:

- Keypad tone when operating the buttons
- Buzzer tones at the end of a programme or for system messages (notifications)

The menu is saved under the following input path.

Settings
- Volume
  - Keypad tone
  - Buzzer tones

- Select the Volume menu option.
- Select either Keypad tone or Buzzer tones. The volume is set in the same way for both options.

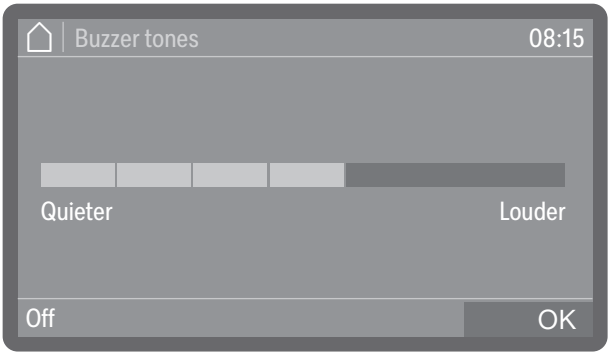

- Set the volume.
  If you select Off, the sound can be switched off entirely. You can switch it on again if required by selecting On (displayed instead of Off).
- Press *OK* to save the setting.

Welcome tone

There is a brief melody when the machine is switched on and off. You can use this option to switch this melody off and back on again.

The menu is saved under the following input path.

Settings

Welcome tone

- Select the Welcome tone menu option.

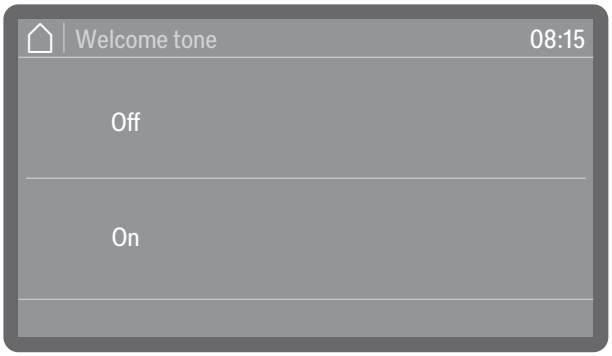

- Off

  The melody is switched off.

- On

  A welcome melody is played when the machine is switched on.

- Select an option.

Logging process data

Processes are documented per cycle. Setpoint and actual values are always recorded.

During the programme cycles, the following data is logged, among other things:

- Machine model and serial number
- Date
- Programme
- Start time
- Cycle number
- Wash blocks
- Dispensing system with dispensing temperature and target dispensing amount if necessary
- Setpoints for temperature and holding time
- Minimum and maximum temperatures during the holding time
- Wash pressure measuring results
- Fault messages
- Programme finish time
- System messages, e.g. salt refill

Memory

Up to 20 cycle protocols are stored in an internal power failure safe memory within the machine. In the event of network or printer problems, for example, these can be subsequently recalled. If the memory is full, the oldest protocol is overwritten.

In addition, raw data from the last programme cycle is stored to create a graphical display of the process data. This data can be converted into graphical representations using external apps or other documentation software systems. It is not possible to create graphical representations in the display or on a directly connected printer. Power failure safe storage of graphical information is not available.

Adding cycle numbers

Miele Customer Service can add subsequent cycle numbers, e.g. in the event of software updates or if the machine controls are replaced.

Communication modules

The machine is equipped with an integrated WiFi module. In addition, the machine has a module slot on the back of the machine, which can be equipped with a Miele XKM communication module to set up wired interfaces.

The interface can be used to permanently archive cycle protocols using documentation software, apps or a report printer. In addition, further digital offers are available if you are connected to the Miele cloud.

Please contact Miele for further information on software, the Miele cloud and suitable printers.

Only use terminal devices (PC, printers, etc.) compliant with IEC/EN 62368 (Australia and New Zealand: AS/NZS 62368).

Depending on the equipment variant, the machine is either equipped with a communication module at the factory or a module can be retrofitted at any time. The communication modules are available from Miele as an accessory. The modules have their own instructions.

Only specialists are permitted to configure the interface, see ▸ ⚙🔒 Extended settings ▸ Networking ▸ WiFi / LAN.

Periodic checks

The machine should be serviced **every 1000 hours of operation, or at least once every 12 months**, by Miele Customer Service or a suitably qualified specialist.

Maintenance covers the following points and functional checks:

- Replacement of wear parts
- Electrical safety check compliant with national rules and regulations (e.g. VDE 0701, VDE 0702 in Germany)
- Door mechanism and door seal
- Any screw connections and connectors inside the wash cabinet
- Water inlet and drainage
- Internal and external dispensing systems
- Spray arms
- Filter combination
- Sump including drain pump and non-return valve
- All mobile units, baskets, modules and inserts
- Steam condenser
- Wash mechanism/wash pressure
- Drying unit
- Visual inspection and functional check of components
- A thermo-electric check (optional on request)
- Seals will be tested for water tightness
- Safety testing of all relevant measuring systems
- Safety features

External documentation software and the computer network will not be tested by Miele Customer Service.

Routine checks

Before the start of each working day, the operator must carry out a number of routine checks.

The following need to be checked:

- Filters in wash cabinet
- Machine spray arms and spray arms of load carriers
- Wash cabinet and door seal
- Dispensing systems
- Water connection closing flaps in the rear panel of the wash cabinet
- Load carriers, e.g. baskets, modules and inserts, as well as any irrigation connectors that may be present

Cleaning the filters in the wash cabinet

⚠ Risk of damage due to blocked waterways.
If the filters are not inserted, dirt particles will end up in the machine water circuit. The dirt particles may block the nozzles and valves.
Only start a programme if the filters are inserted.
Check that the filters are positioned correctly when you reinsert them after cleaning.

The filters in the floor of the wash cabinet prevent coarse soiling from coming into contact with the circulation system. Filters can become blocked by soiling. They therefore need to be checked every day and cleaned as necessary.

It is possible to set a cleaning interval for the filters in the wash cabinet in the controls, see ⚙ Extended settings ▸ Filter maintenance.
The cleaning interval is not a substitute for the daily routine check of the filters in the wash cabinet.

Removing and cleaning filters

⚠ Danger of injury from sharp and pointed objects.
There is a danger of injury from sharp or pointed objects (e.g. glass shards, metal chips, etc.) retained in the filters. Small glass shards in particular are not always immediately visible in the filter.
Therefore, take extra care when removing and cleaning the filters.

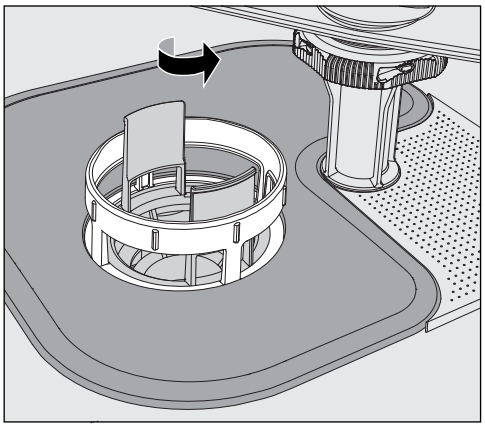

- Loosen the microfine filter by turning it in the direction of the arrow and remove it together with the coarse filter.

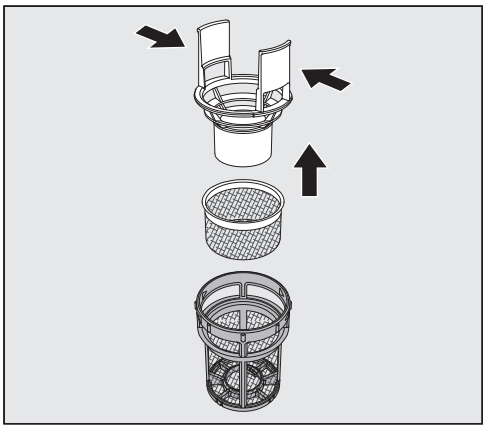

- Press the catches together and pull the coarse filter up and out to remove it.

- Remove the fine filter which sits loosely between the coarse filter and the microfine filter.

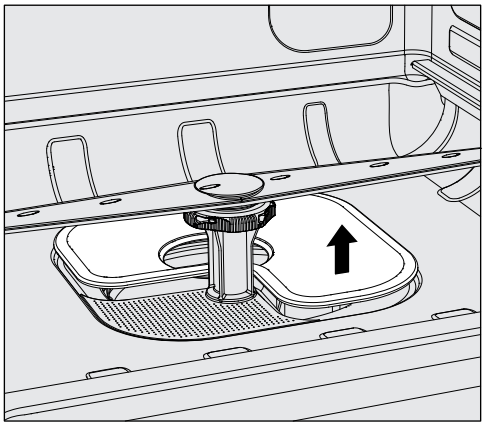

- Remove the surface filter last.
- Clean the filters.
- Refit the filter combination in reverse order.

- Ensure that the surface filter sits flat in the base of the wash cabinet.
- The coarse filter must securely click into place in the microfine filter.
- The microfine filter is screwed in tight as far as it will go.

Cleaning the spray arms

The spray arm nozzles can become blocked, especially if the filters are not inserted correctly in the wash cabinet. This can cause coarse particles of soiling to get into the wash water circulation.

The spray arms must be visually checked daily for any soiling.

- To do this remove the mobile unit or the baskets.
- Visually check the spray arms for soiling and blocked nozzles.
- Also check that the spray arms can turn easily.

⚠ Immobile or blocked spray arms must not be used again.
In this case, contact Miele Customer Service.

Cleaning the spray arms

To clean the machine, the spray arms of the machine, mobile units and baskets must be dismantled as follows:

- Remove the mobile unit or the baskets from the machine.

The upper machine spray arm is attached with a plug connection.

- Pull the upper machine spray arm downwards.

The lower machine spray arm and the spray arms of the load carriers are fastened with bayonet catches.

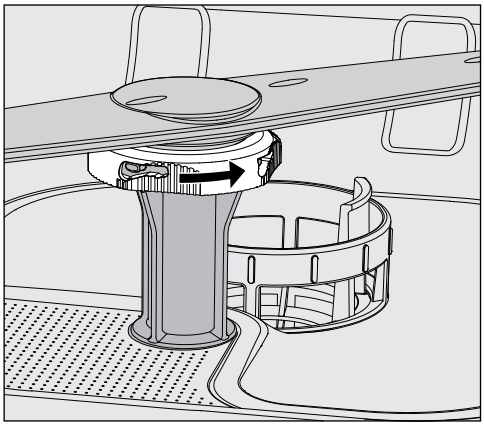

- Loosen the knurled bayonet catches by turning them as far as they will go in the direction of the arrow.
- You can then pull the spray arms up or down.

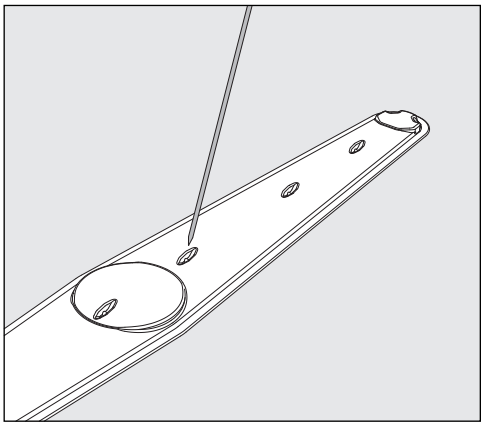

- Use a pointed object to push particles into the spray arm.
- Rinse the spray arm thoroughly under running water.

⚠ Do not allow any magnetic objects or load items to attach to the magnets on the spray arms.
Any metallic objects on the magnets can cause a false reading of spray arm rotation.
Remove all metal objects from the magnets.

- Check the spray arm bearings for visible signs of wear.

Visible wear on the bearings can adversely affect the long-term functioning of the spray arms.
In this case, contact Miele Customer Service.

- Replace the spray arms after cleaning.
- Make sure the spray arms can rotate easily after they have been fitted.

The spray arms of the load carriers are each labelled with a number that is also embossed on the water inlet pipes in the bayonet catch area, e.g. 03. When installing, make sure that the numbers on the spray arms match the numbers on the water inlet pipes.

Cleaning the machine

⚠ Never clean the machine or near vicinity with a water hose or a pressure washer.

⚠ Do not use cleaning agents containing ammonia or thinners on stainless steel surfaces!
These agents can damage the surface material.

For surface disinfection, use a cleaning agent recommended and listed by the manufacturer, e.g. an alcohol-based agent with a maximum alcohol content of 70 %.

Cleaning the control panel

⚠ Do not use abrasive cleaners or all-purpose cleaners to clean the control panel.
Due to their chemical composition, these can cause considerable damage to the glass and plastic surfaces and to the onset control buttons.

- Clean the control panel with a damp cloth and washing-up liquid or with a non-abrasive stainless steel cleaner.
- You can also use commercially available glass or plastic cleaners to clean the display and the plastic underside.

Cleaning the door and the door seal

- Wipe the door seals regularly with a damp cleaning cloth to remove any soiling.
  Door seals which are no longer tight or which have suffered damage must be replaced with new ones by Miele Customer Service.
- Remove any soiling from the door sides and hinges.
- Regularly clean the groove in the plinth panel under the door with a damp cleaning cloth.

Cleaning the wash cabinet

The wash cabinet is generally self-cleaning. However, should a build-up of deposits occur in the cabinet, please contact Miele Customer Service for advice.

Cleaning the machine front

- Clean the stainless steel surface with a damp cleaning cloth and washing-up liquid or a non-abrasive stainless steel cleaning agent.

Preventing re-soiling

- To help prevent re-soiling of stainless steel surfaces (fingerprints, etc.), a suitable stainless steel care product can be used after cleaning.

Checking the load carriers

Baskets and inserts should be checked before each use to make sure they are functioning correctly.

The following points need to be checked:

- Are the basket rollers in good condition and are they securely attached to their baskets?
- Are the water connectors present and undamaged?
- Are height-adjustable water connectors adjusted to the correct height and securely fixed?

Where applicable:

- Do the spray arms rotate freely?
- Are the spray arm nozzles free of any blockages? See “Cleaning the spray arms”.

If compressed air chambers are present:

- Are the seals in the quick-release couplings intact?

Replacing the HEPA filter

Valid for machines with active drying (drying fan).

The air filters for the machine’s internal drying unit have a limited service life. For this reason, the filters must be replaced regularly.

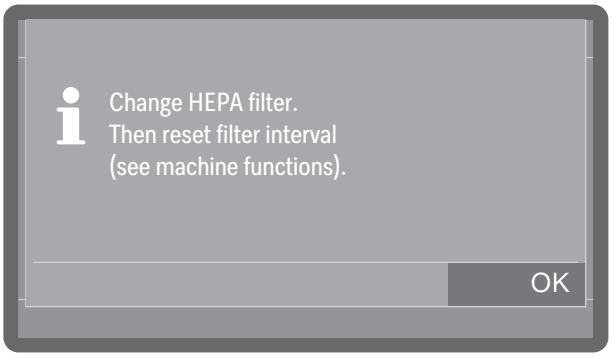

- Press OK to acknowledge the message.
- Open the service flap in the plinth panel.

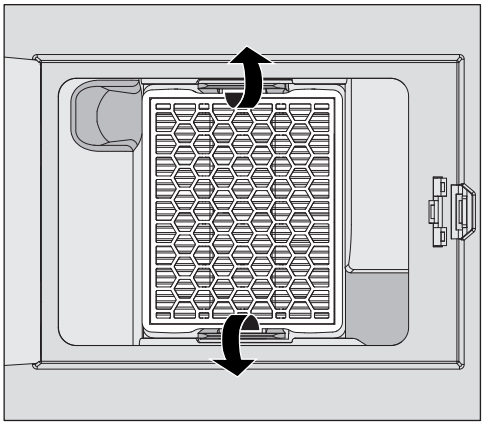

- Push the retaining clips outwards to release the HEPA filter.
- Grasp the recesses on the sides and pull the filter forwards.
- Insert a new HEPA filter, making sure that it locates securely in the retaining clips.
- Close the service flap.

Whenever the filter is replaced, the operating hours counter must be reset. To do this, select the filter at ▸ Machine functions ▸ Filter interval and reset the counter using the Reset interval option.

Process validation

Adequate processing performance must be regularly confirmed by the user.

Sensor test point

The sensor test point for validation is located at the front right on the top of the machine, covered by the lid or the worktop. To reach the access point, the lid of the machine must be removed or the machine must be pulled out from under the worktop.

- Open the door.

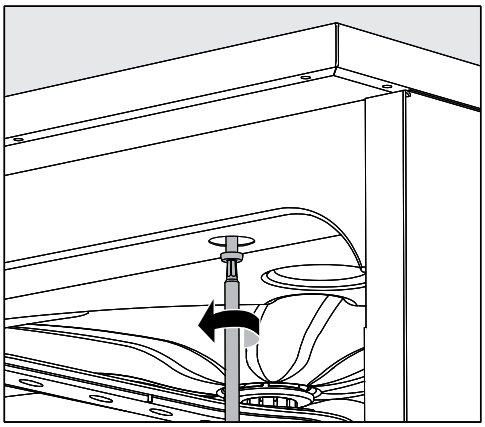

- Remove the protective caps and unscrew the fixing screws.
- Then remove the locking screws on the back of the machine from the **lid** and lift the **lid** to remove it.

Or

- Pull the machine out by approx. 15 cm from under the **worktop** until the sensor test point on the top is freely accessible.

Test programmes

Various test programmes are available for monitoring cleaning performance in routine checks. The test programmes are not separate reprocessing programmes. Rather, they are additional functions that can be activated prior to starting any reprocessing programme.

The test programmes interrupt the programme cycle automatically at specified points. The interruption is indicated by a buzzer and message on the display. Miele Customer Service can set the duration of the interruption to between 10 seconds and approx. 42 minutes. During this time period, measurements can be made or the door can be opened to obtain a sample.
To prevent cooling of the wash cabinet, do not keep the door open too long.

The programme cycle continues automatically after the time has elapsed. If the door has been opened, the programme cannot resume until the door has been closed again.
If a measurement or sample is not needed, you can resume the programme sooner by pressing the *Start/Stop* sensor control.

In addition, the door can be opened at any time during the drying phase to check the dryness of the wash load. In this way, you can determine the optimal drying time.

The following test programmes can be selected:

- Laboratory

  The programme cycle is stopped in each wash block immediately before the wash water is drained away.

- Validation

  The programme cycle is interrupted at the following points:

  – Before the wash water is drained away in the final wash block
  – After the interim rinse before the wash water is drained away, and
  – After water intake and before draining in the final rinse block

Activating the test programme

Test programmes are only valid for one programme cycle. To carry further tests, a test programme must be selected again beforehand in each time.

The menu is saved under the following input path.

Extended settings
Programme options
Test programme

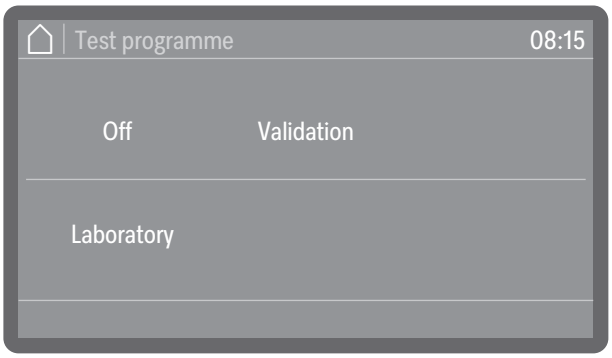

- Off

  The menu is closed without a programme being selected.

- Laboratory

  Activates the Laboratory test programme.

- Validation

  Activates the Validation test programme.

■ Select an option.

You can now start the performance test.

■ To do this, select a programme from the programme list and start it.

During the programme sequence, the information Test programme is shown on the display.

If you want to deactivate the test programme again before the performance test, you have to call up the menu again and select the Off option.
If you interrupt or cancel the running programme during a performance test before an automatic measuring point has been reached, the test programme is deactivated immediately.

Troubleshooting

The following guide should help you to find the reason for a fault and to correct it. However, please observe the following:

⚠ Danger due to unauthorised repairs.
Unauthorised repairs can expose the user to considerable risk.
Repairs may only be carried out by Miele Customer Service or a suitably qualified specialist.

To avoid unnecessary customer service visits, check that the fault has not been caused by incorrect operation when a fault message first appears.

Technical faults and messages

Problem	Cause and remedy
The display is dark and all backlit sensor controls are out.	The machine is not switched on. ■ Switch the machine on using the ⏻ On/Off sensor control.
	A fuse is defective or has tripped. ■ Refer to the minimum fuse rating on the data plate. ■ Reset the trip switch. ■ If the fuse trips again, contact Miele Customer Service.
	The machine is not plugged in or connected to the power supply. ■ Insert the plug and switch on at the socket.
The machine has switched itself off.	This is not a fault! The Standby/Off function switches the machine off automatically after a preset waiting time to save energy. ■ Switch the machine on using the ⏻ On/Off sensor control.
The display is dark and the *Start/Stop* sensor control is pulsing.	This is not a fault! The machine is ready for use. ■ Press the *Start/Stop* sensor control to reactivate the machine.
Power cut during operation	If a temporary power cut occurs during a programme sequence, the programme is cancelled.
A programme has ended, but the machine has not rinsed.	This is not a fault. The demo mode for simulating processes and programme sequences on the display is activated. ■ Deactivate demo mode, see ▸ Demo mode.

Maintenance and testing

Problem	Cause and remedy
Next electrical safety test due on: or in hours	This is not a fault! The Miele Customer Service has provided a recommended date for the next electrical safety test. ■ Arrange an appointment with Miele Customer Service or have the electrical safety test carried out by a suitably qualified specialist.

Problem	Cause and remedy
Next qualification due on: or in hours	This is not a fault! Miele Customer Service has recommended a date for the next qualification. ■ Arrange an appointment with Miele Customer Service or have the qualification carried out by a suitably qualified specialist.
Next service due on: or in hours	This is not a fault! Miele Customer Service has recommended a date for the next service visit. ■ Arrange an appointment with Miele Customer Service or have the service carried out by a suitably qualified specialist.

Dispensing/Dispensing systems

⚠ Caution when handling chemical agents.
For all chemical agents, the chemical agent manufacturer's safety instructions as given on their safety data sheets must be observed.

Problem	Cause and remedy
Change canister	During a programme sequence, a low fill level was measured in a canister for liquid process chemicals. ■ Replace the empty canister with a full one.
Fill dispensing paths	This is not a fault! A dispensing system is currently being filled automatically Wait until the process is complete.
Filling of dispensing paths cancelled	Filling of the dispensing system was cancelled because an insufficient flow rate was identified. A dispensing hose may be kinked or the suction lance blocked. ■ Check the dispensing hose for kinks and leaks. Position it so that it cannot become kinked. ■ Check the suction aperture of the suction lance for blockages and remove these as necessary. ■ Start the process again.
	Contact Miele Customer Service if there are leaks in the dispensing hose or there is a fault with the suction lance.

Highly viscous (thick) process chemicals can affect the dispenser monitoring and lead to inaccurate data. In this instance, please contact Miele Customer Service for advice.

Insufficient salt/Water softener

Problem	Cause and remedy
F561 Machine locked, insufficient salt: refill dishwasher salt. Machine will unlock after a few seconds. Then start the "Cold water rinse" programme.	The water softener cannot reactivate because there is insufficient salt. The machine is locked for further use. ■ Refill with reactivation salt. The machine is unlocked a short while after the salt container has been refilled. Reactivation will occur automatically during the next programme sequence.
Refill salt - machine will be disabled shortly.	The salt supply in the water softener has been used up. Reactivation is no longer possible. The machine will be locked for further use with the next reactivation. ■ Refill with reactivation salt.
Close salt container lid.	The salt container is not closed properly. Salt residues are preventing it from closing. ■ Remove all salt residues from the edge of the salt refilling opening, the lid and the seal. Do **not** use running water to rinse away salt residues as this can cause the container to overflow. ■ Close the container properly.
	Machine with steel door: The salt container flap has sprung open during a programme. ⚠ When the door is opened, hot steam and process chemicals can escape. ■ Open the door and close the container flap.

Filters

Problem	Cause and remedy
Clean filter combination. Then reset filter interval (see machine functions).	The filter combination needs cleaning. ■ Remove the filter combination and clean it, see "Cleaning the filters in the wash cabinet". ■ After cleaning, reset the maintenance interval for the filter combination, see ▸ Machine functions ▸ Filter interval ▸ Filter combination ▸ Reset interval.
Change HEPA filter. Then reset filter interval (see machine functions).	The maximum permissible operating hours for the HEPA filter have been reached. ■ Replace the HEPA filter with a new one. ■ Then reset the operating hours counter for the HEPA filter, see ▸ Machine functions ▸ Filter interval ▸ HEPA filter ▸ Reset interval.

Cancellation with fault number

If a programme is cancelled and a fault number appears, e.g. Fxxx (where xxx represents a number), there could be a serious technical fault.

In the event of a programme being cancelled and a fault number being shown:

- Follow the instructions in the display.
- Switch the machine off using the ⏻ On/Off sensor control.
- Wait approximately 10 seconds before switching the machine on again with the ⏻ On/Off sensor control.
- Start the previously selected programme again.

If the same fault message appears again:

- Make a note of the fault message.
- Switch the machine off using the ⏻ On/Off sensor control.
- Contact Miele Customer Service.

Please also read the notes regarding the following fault numbers:

Problem	Cause and remedy
F433, F438 **Door blockage**	Objects in the closing area of the door or outside in front of the door prevent the door from being opened or closed automatically. ■ Remove all objects in front of the door of the machine, e.g. mobile units or boxes. ■ Open the door and remove all objects that protrude into the closing area of the door. For example, sort the load items so that they do not protrude into the door area and remove all objects that protrude into the door area from the outside, e.g. hanging cleaning cloths. ■ Switch the machine off and then back on again.
F434, F444, F446 **Door lock**	Slamming the door can result in problems with the Comfort door lock. ■ Open and close the door.
F460, F461, F462 **Spray arm blockage**	The set speed has not been reached. – Load items are blocking the spray arm ■ Arrange the load items so that the spray arms can turn easily and start the programme again.
	– The spray arm is clogged ■ Clean the spray arm. ■ Check whether the filters in the wash cabinet are clean and correctly inserted. ■ Start the programme again.
	– Wash pressure is too low due to a heavy build-up of foam ■ Start the Cold water rinsing programme in order to clean the wash cabinet. ■ Then reprocess the load items again.
F511, F512, F513 **Dispensing pump**	Technical defect in one of the dispensing pumps. ■ Contact Miele Customer Service.

Problem	Cause and remedy
F518, F519, F520 **Dispensing system**	Fault detected in the dispensing system. ⚠ Take care when using process chemicals. For all process chemicals, the manufacturer's safety notes as given on their safety data sheets must be observed. ■ Check the fill levels of the canisters and replace empty ones with full ones. ■ Check the suction apertures of the suction lances and remove any deposits. ■ Check the connections between the dispensing hoses and the suction lances, the machine, etc. ■ Remove any kinks from the dispensing hoses and check the hoses for leaks. Position the dispensing hoses so that they cannot kink. ■ Vent the dispensing systems. If you identify any leaks in the dispensing hoses or defects on the suction lances, contact the Miele Customer Service Department.

Door

Problem	Cause and remedy
Hot wash cabinet: Risk of injury, take care when opening the door.	When the door sensor control is pressed, the temperature in the wash cabinet is over 60 °C. ⚠ When the door is opened, hot steam and process chemicals can escape. ■ Open the door only when strictly necessary.
Anti-trap guard: To continue, open the door.	The door was closed before the door lock catch was fully retracted. ■ Open the door. ■ The door lock catch must be fully retracted before you close the door again.
Emergency release: To continue, open the door.	The door was opened using the emergency release. ■ Follow the instructions for emergency release, see "Opening the door using the emergency release".

Unsatisfactory cleaning and corrosion

Problem	Cause and remedy
White deposits remain on the load items.	The water softener settings are too low. ■ Programme the water softener to the appropriate water hardness.
	The salt in the container has been used up. ■ Refill with reactivation salt.
	The quality of the water for the final rinse was not sufficient. ■ Use water with low conductivity. ■ If the machine is connected to a full demineralisation cartridge, check its condition and replace it if necessary.
	The water entering via the DI water connection is not sufficiently demineralised. ■ Check the upstream demineralisation systems. If necessary, the demineralisation cartridge of the water purifier must be replaced.
The load items are flecked.	The rinsing agent container is empty. ■ Refill the container.
	The rinsing agent concentration is set too low. ■ Contact Miele Customer Service and have the dispensing concentration reset.
The cleaning results are unsatisfactory.	Load carriers were not suitable for the load items. ■ Select load carriers which are suitable for the task.
	The load carriers were loaded incorrectly or overloaded. ■ Arrange the load items correctly according to the information in the operating instructions. ■ Avoid overloading the load carriers.
	The reprocessing programme was not suitable for the soiling. ■ Select a suitable programme. Or ■ Adjust the programme parameters to suit the task.
	Soiling has been left to dry on the load items for too long. ■ Soiling should not be left on the load items for more than 6 hours before machine reprocessing.
	A spray arm is blocked. ■ Ensure the spray arms are not obstructed when arranging the load items.
	The nozzles of the spray arms are clogged. ■ Check the nozzles and clean them as necessary.
	The filters in the wash cabinet are soiled or not inserted correctly.

Problem	Cause and remedy
	■ Check the filters and clean them if necessary.
	Load carriers were not correctly mounted on the water connection. ■ Check the adapter.
Stainless steel items are showing signs of corrosion.	The stainless steel is of insufficient quality for machine reprocessing. ■ Only use stainless steel items made of high quality stainless steel and follow the instructions of the manufacturer regarding machine reprocessing.
	The chloride content in the water is too high. ■ Have a water analysis check carried out. Connection to an external water processing unit and the use of demineralised water may be necessary.
	Neutralisation has not taken place during the programme. ■ Check the level in the supply container and vent the dispensing system if necessary.
	Rust or superficial rust has built up in the wash cabinet, e.g. due to an excessively high iron content in the water or rust on other wash load items. ■ Check the installation. ■ Discard any rusty items.

Spray arm monitoring/wash pressure

Problem	Cause and remedy
Upper spray arm: Blockage detected **or** Middle spray arm: Blockage detected **or** Lower spray arm: Blockage detected	The set speed has not been reached. – Load items are blocking the spray arm ■ Arrange the load items so that the spray arms can turn easily and start the programme again.
	– The spray arm is clogged ■ Clean the spray arm. ■ Check whether the filters in the wash cabinet are clean and correctly inserted. ■ Start the programme again.
	– Wash pressure is too low due to a heavy build-up of foam ■ Follow the instructions regarding foam build-up, see “Chemical processes and technology”. ■ Start the Cold water rinsing programme in order to clean the wash cabinet. ■ Then reprocess the load items again.

Noises

Problem	Cause and remedy
Knocking noise in the wash cabinet.	One or more spray arms are knocking against the wash load. ■ Cancel the programme. To do this follow the instructions in “Cancelling a programme”. ■ Arrange the wash load so it cannot obstruct the spray arms. ■ Make sure the spray arms can rotate freely. ■ Start the programme again.
Rattling noise in the wash cabinet.	Items are insecure in the wash cabinet. ■ Cancel the programme. To do this follow the instructions in “Cancelling a programme”. ■ Rearrange the load so that items are secure. ■ Start the programme again.
Knocking noises in the water supply pipe.	This may be caused by the on-site installation or the cross-section of the water supply pipe being too small. This does not affect the function of the machine. ■ Contact a qualified installer.

Cleaning the drain pump and non-return valve

If water has not been pumped away at the end of a programme there may be a foreign object in the drain pump or blocking the non-return valve.

- Remove the filter combination from the wash cabinet, see “Cleaning the filters in the wash cabinet”.

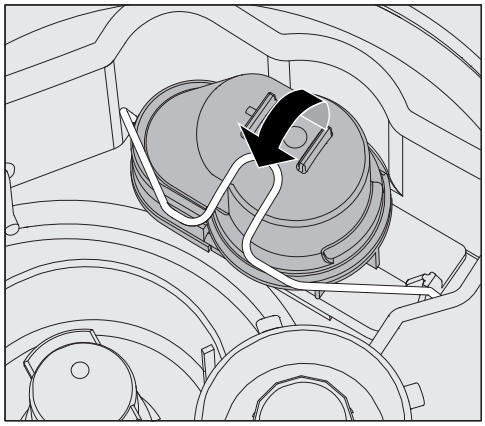

- Open the locking clamp.
- Lift out the non-return valve and rinse well under running water.
- Make sure that the vent on the outside of the non-return valve is not blocked (this vent is only visible after the non-return valve has been taken out). If it is blocked, use a pointed object to release the blockage.

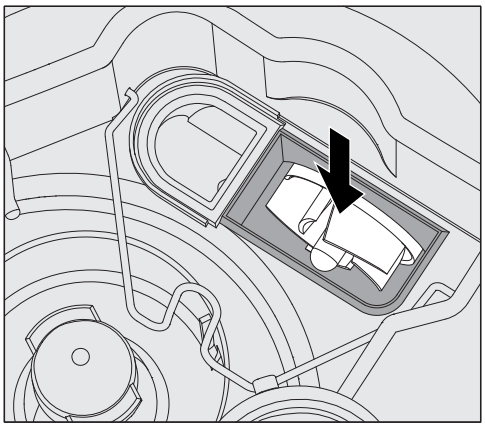

The drain pump impeller is situated under the non-return valve.

- Check the impeller for blockages and remove them if necessary before refitting the non-return valve.
- Carefully replace the non-return valve and secure it with the locking clamp.

Cleaning the water intake filters

Filters are incorporated into the water inlet connection on the hose to protect the water inlet valve. If these filters get dirty they must be cleaned as otherwise too little water will flow into the wash cabinet.

⚠ The plastic housing on the water inlet valve contains an electrical component. It must not be dipped in water.

To clean the filter

- Disconnect the machine from the mains (switch the machine off, unplug it or disconnect or disable the fuse).
- Close the stopcock.
- Unscrew the water intake valve.

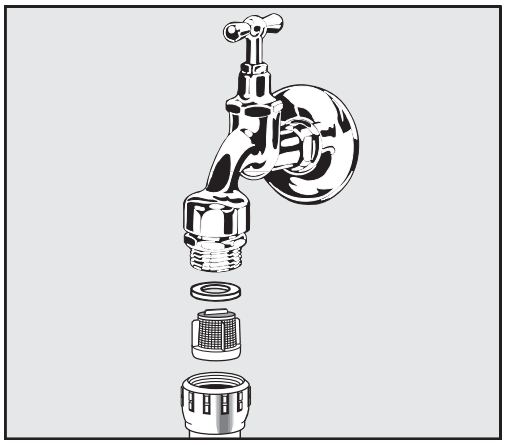

- Remove the seal from the screw thread.
- Pull the filter out using combination or pointed pliers.
- Clean the filter or replace it if necessary.
- Replace the filter and seal, making sure they are sitting correctly.
- Screw the water intake valve onto the stopcock. Ensure that the screw thread goes on straight and not cross-threaded.
- Open the stopcock. If water leaks out, the screw connection may not be connected securely or it may have been screwed on at an angle. Fit the water intake valve straight and screw it in place.

Retrofitting the large-surface filter

If the water contains a high level of insoluble components, a large-surface filter can be installed between the stopcock and the water inlet hose.
The large-surface filter is available from Miele Customer Service.

IMPORTANT
UK, Australia and New Zealand
For the UK, Australia and New Zealand a non-return check valve is required between the tap and optional filter.

Contacting Customer Service

⚠ Repairs may only be carried out by Miele Customer Service or an authorised technician.
Unauthorised repairs can expose the user to considerable risk.

To avoid unnecessary customer service visits, you should check whether this fault can be remedied yourself using the instructions in 📖 "Problem solving guide" the first time a fault message occurs.

If, having followed the advice in the operating instructions, you are still unable to resolve a fault, contact Customer Service.

The contact details can be found on the back of these 📖 operating instructions or on the Miele homepage, e.g. at www.miele.com/professional.

If possible, please have the following information ready when contacting us:

- The model and serial number of the machine

  This information can be found on the data plate. The position of the data plates is described in the machine overview or can be called up via the display at ▸ ⚙🔒 Extended settings ▸ Data plate.

- The fault message and the fault number from the display
- The software versions of the machine components

  This information can be found on the display at ▸ ⚙🔒 Extended settings ▸ Software version.

Setup and alignment

Further information can be found in the installation plan. The installation plan is available online.

⚠ Unauthorised access poses a risk.
Settings in the machine, e.g. parameters for dispensing process chemicals, may be changed as a result of unauthorised access via the machine display.
Set up the machine in a room with restricted access. Only give the PIN code to people you trust.

⚠ Risk of injury from metal parts.
With some metal parts, there is a risk that you may be injured or cut.
Wear cut-resistant protective gloves when transporting and setting up the machine.

⚠ Risk of injury when lifting the machine.
Due to their heavy weight, the machines must not be lifted by a single person.
If possible, always have 2 or more people lift the machines. Follow the instructions on occupational safety, e.g. ensure an ergonomic posture when lifting.
Use suitable aids such as pallet trucks or sack trucks for longer transport distances.

⚠ Material damage during transport with pallet trucks, sack trucks or other transport aids.
Pallet trucks, sack trucks or other transport aids can dent components in the plinth of the machine and damage them.
When transporting the machine using pallet truck, sack truck or other transport aids, the machine must be in its original packaging or placed on a stable, continuous support.
When transporting the machine using a sack truck, do not lift it from the front as this could damage the control panel or the door.

⚠ Material damage during transport or installation.
Do not lift, pull or push the machine by protruding parts, such as the control panel, the open door, drawers (if present), components on the back of the machine, hoses or cables, as these could be damaged or torn off.
To lift, pull or push the machine, hold it by the housing if possible.

Installation variants

The machine is suitable for the following installation variants:

- Freestanding
- Slot-in:

  The machine should be placed next to other machines or furniture or in a niche. The niche must be at least 600 mm wide and 598 mm deep.
- Built-under:

  The machine should be placed under a continuous worktop or sink drain. The installation space must be at least 600 mm wide, 598 mm deep and 820 mm high.

Freestanding machines or machines positioned in a niche must be equipped with machine lids.

Matching lids are available from Miele.

Levelling out uneven floors

The machine must be stable and horizontal.

Any unevenness in the floor level and height of the machine can be compensated for by adjusting the 4 feet. The feet can be screwed out to a maximum of 60 mm.

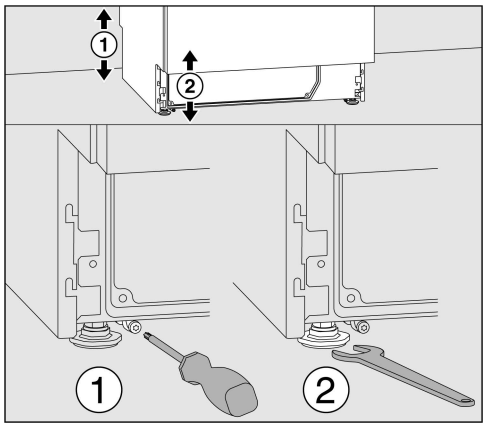

The front machine feet can be adjusted with an open spanner (spanner size 13); the rear ones with a T20 Torx screw.
If the runners of the rear machine feet are not fitted, the machine feet can also be adjusted with the open spanner.
They are adjusted upwards when turned clockwise and downwards when turned anti-clockwise.

Hose holder

The supplied hose holders can be used to lay the power cable and the hoses for supply and waste water in a way that saves space.
The hose holder prevents hoses from kinking or crushing when installing the machine in tight recesses.
The power cable and hoses can be laid either on the left or the right, depending on the connection situation.

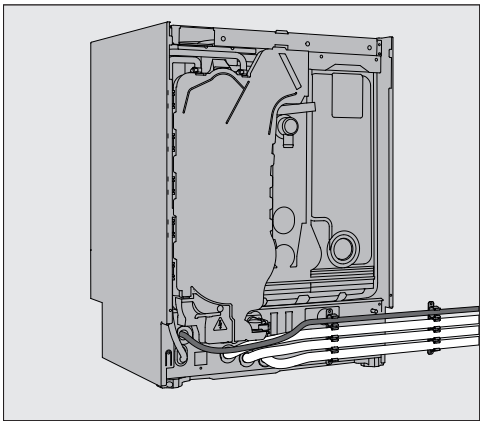

Lids

The lids must be screwed to the machine. The side with the screw threads on the underside belongs at the front; the side with the brackets for the locking screws protruding downwards at the rear.

Installation instructions are included with lids that can be purchased separately.

- Place the lid on the machine. The lid must be flush-fit.
- Tighten the two locking screws on the back of the machine.
- Open the door.

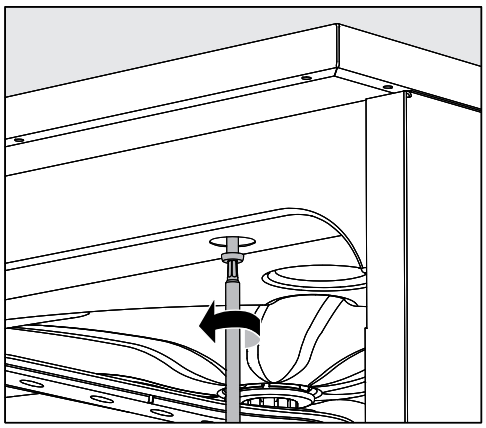

- Remove the cover caps on the left and right and tighten the fixing screws. Then refit the cover caps.

Building under a continuous worktop

⚠ Damage caused by condensation.
When the machine is in operation, vapours escape which can condense on the furniture and fittings in the immediate vicinity.
In order to reduce the risk of water damage, the area around the machine should be limited to furniture and fittings that are designed for use in commercial environments.

Steam condenser

To avoid steam damage to the worktop the protective foil supplied (25 x 58 cm, self-adhesive) must be applied underneath the worktop in the area of the steam condenser.

Securing to the worktop

To improve stability, the machine must be secured to the worktop after it has been aligned.

- Open the door.

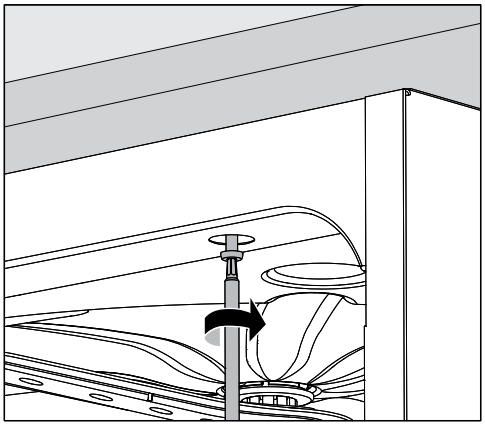

- Remove the cover caps on the left and right. Screw the machine to the continuous worktop through the holes in the front trim. Then refit the cover caps.

Please contact Miele Customer Service to secure it at the sides to adjacent cabinetry.

Venting the circulation pump

⚠ The gaps between a built-in machine and adjacent cabinetry must not be sealed, e.g. with silicone sealant, as this could compromise ventilation of the circulation pump.

Vapour barrier for worktops

The vapour barrier supplied protects the worktop from damage caused by steam when the door is opened. It must be positioned underneath the worktop above the machine door.

Electromagnetic compatibility (EMC)

The cleaning machine has been tested for electromagnetic compatibility (EMC) in accordance with EN 61236-1 class B and is suitable for operation in commercial environments and other similar environments which are connected to the mains power supply.

The cleaning machine‘s high-frequency (HF) energy emissions are very low and are therefore unlikely to interfere with other electronic devices in the vicinity.

Flooring at the installation site must be wood, concrete or tiled. Synthetic flooring must be able to withstand a relative humidity level of 30 % to minimise the risk of electrostatic discharges.

The quality of the supply voltage should comply with that found in a typical commercial environment. Check that the supply voltage is within a range of +/-10 % of its nominal value.

⚠ All electrical connections must be carried out by a suitably qualified electrician in accordance with local and national safety regulations.

- The electrical installation must be carried out in accordance with IEC 60364-4-41 or the local regulations.
- The connection to the power supply must be via a suitably rated plug and socket and must comply with national regulations. The socket must be accessible after the machine has been installed. An electrical safety test must be carried out after any maintenance or repair work, for example.
- If the machine is hard-wired to the power supply or connected via a socket, a power switch with all-pole isolation must be installed. The power switch must be designed to operate at the rated current for the machine, must ensure a 3 mm gap between all open contacts and must be able to be locked in the off position. The power switch must be accessible after the machine has been installed.
- Equipotential bonding should be carried out if required.
- The rated loads are specified on the data plate and in the wiring diagram.
- For added safety, the machine should be protected by a type A residual current device with a trip current of 30 mA (DIN VDE 0664). The installation of the residual current device must be carried out on site by the operator.
- The mains connection cable may only be replaced by an original spare part from the manufacturer.

Further information on the electrical connection can be found in the installation plan. The installation plan is available online.

The machine must only be operated with the voltage, frequency and fuse rating shown on the **data plate**.

This machine **can be converted to a different type of power supply** in accordance with the conversion diagram and wiring diagram.

The **data plates** are attached to the machine. The positions are described in the machine overview.

The **wiring diagram** is available online.

Equipotential bonding connection

There is a screw connection point marked ⏚ at the back of the machine, to which additional equipotential bonding can be connected if required.

Connection to the water supply

⚠ The water inside the cleaning machine is not suitable for drinking!

- The cleaning machine must be connected to the water supply in strict accordance with local regulations.
- The water used must at least comply with European or national regulations for drinking water quality. If the water supply has a high iron content, there is a danger of corrosion occurring on load items made of stainless steel and on the cleaning machine itself. If the chloride content of the water exceeds 100 mg/l, the risk of corrosion to load items made of stainless steel in the machine will be further increased.
- In certain regions (e.g. mountainous areas), the water composition may cause precipitates to form, requiring the use of softened water in the steam condenser.
- The cleaning machine complies with the applicable European standards for the protection of drinking water.
  UK, Australia and New Zealand only: To comply with water regulation requirements, this machine must be connected to the potable water supply via the non-return check valve supplied with the machine.
- The machine is equipped as standard for connection to cold water (blue marking) and hot water (red marking) up to max. 60 °C (UK: 60 °C). Connect the inlet hoses to the stopcocks for cold and hot water.
- If no hot water supply is available, the **red** coded inlet hose for the hot water connection must also be connected to the cold water supply.
- The steam condenser is supplied with water via the cold water connection.
- The **minimum flow pressure** is 100 kPa (UK: 200 kPa) the cold water connection, 40 kPa (UK: 200 kPa) for the hot water connection and 30 kPa (UK: 200 kPa) for the DI water connection.
- The **recommended flow pressure** is ≥ 200 kPa for the cold and hot water connections and ≥ 200 kPa for the DI water connection in order to avoid excessively long water intake times.
- The **maximum permissible static water pressure** is 1.000 kPa.
- If water pressure is not within the specified range, please contact Miele Customer Service for advice.
- Stopcocks with a ¾ inch screw thread must be provided on site for the connection. The valves must be easily accessible to allow the water inlet to be turned off when not in use.
- The water inlet hoses are approximately 1,7 m long pressure hoses, DN 10, with ¾ inch screw thread. The filters in the screw threads must not be removed.

IMPORTANT
UK, Australia and New Zealand
For the UK, Australia and New Zealand a non-return check valve is required between the tap and optional filter.

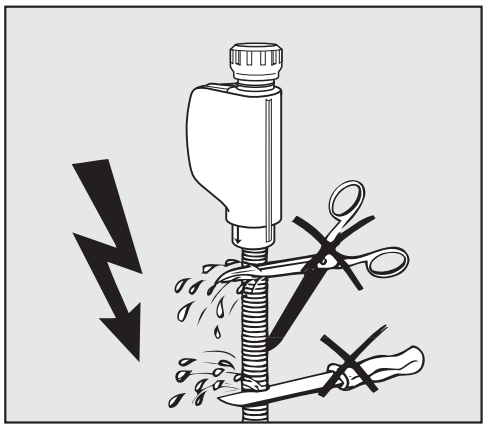

⚠ Risk of electric shock from mains voltage.
There are electrical components in the water inlet hoses.
Do not shorten or otherwise damage the water inlet hoses supplied with the machine.

Further information can be found in the installation plan. The installation plan is available online.

In line with national provisions relating to the protection of drinking water, non-return valves must be installed between the water connection and the water inlet hose on all water inlet hoses present. The connection for demineralised water is excluded.

Retrofitting the large-surface filter

If the water contains a high level of insoluble components, a large-surface filter can be installed between the stopcock and the water inlet hose.
The large-surface filter is available from Miele Customer Service.

DI water connection for 30-1.000 kPa (UK: 200-1.000 kPa) – pressure-proof (optional)

The cleaning machine is optionally supplied for a pressurised system operating between 30-1.000 kPa (UK: 200-1.000 kPa). At a water pressure (flow pressure) below 200 kPa, the water intake time extends automatically.

- Connect the pressure-tested, green-marked DI water inlet hose with the ¾" threaded union to the on-site stopcock for DI water.

⚠ If the machine is not going to be connected to demineralised (DI) water, the DI water connection has to be deactivated by Miele Customer Service. The water inlet hose remains on the back of the machine.

DI water inlet for 8,5-60 kPa – unpressurised

For connection to 8,5-60 kPa, the machine must be equipped with a feed pump for demineralised water. Installation is carried out by Miele Customer Service or a suitably qualified specialist.

With an unpressurised demineralised water container, the outlet nozzle must be at least level with the top edge of the machine, see installation plan.

Demineralised water ring line

The machine can be connected to a ring line system for demineralised water. For this purpose, the machine must be technically adapted and the controls reset by Miele Customer Service.

Please contact Miele Customer Service for further information.

IMPORTANT

UK, Australia and New Zealand.

The appliance must be connected to the water supply in strict accordance with local and national requirements (e.g. Plumbing Code of Australia (PCA). This appliance must be installed according to AS/NZS 3500.1 (Australia and New Zealand) or in accordance with water regulations (UK). This appliance has been supplied with a separate backflow prevention device.

This machine must be connected to the potable water supply via the non-return valve (check valve) supplied with the machine.

Before making plumbing connections, ensure the appliance is disconnected from the mains power supply (switch off or unplug from the power supply).

- Turn off the mains water tap.
- Place the seals on both sides of the non-return valve.
- Connect the female end of the non-return valve to the mains water tap (3/4" thread).
- Connect the filter (optional accessory) to the male end of the non-return valve (3/4" thread).
- Connect the inlet hose to the filter (optional accessory).

Ensure that all connections are screwed into position correctly. The connection point is subject to mains water pressure.

- Turn on the tap slowly and check for leaks.

Correct the position of the seal and union if necessary.

The demineralised water supply must meet local and national regulations and include a backflow prevention device at first point of entry.

Connecting the drain hose

- The machine drainage system is fitted with a non-return valve, which prevents dirty water from flowing back into the machine via the drain hose.
- The machine drain hose should be connected to a separate on-site drainage system for the machine only. If a separate connection is not available, we recommend connecting the hose to a dual-chamber siphon.
- The on-site connection must be between 0,3 m and 1,0 m in height, **measured from the lower edge of the machine**. If the connection is lower than 0,3 m, the drain hose must be laid with a bend in it and beat least 0,3 m high.
- The drainage system must be able to accommodate a minimum drainage flow of 16 l/min.
- The drain hose is approx. 1,4 m long and flexible with an internal diameter of 22 mm. Hose clips for the connection are included.
- The drain hose must not be shortened.
- The drain hose can be extended using a connecting piece to attach a further length of hose up to 4,0 m. The drainage length must not be longer than 4,0 m.
- The drain noise can be significantly reduced if the drain hose is laid with a bend in it with a minimum height of 0,6 m and a maximum height of 1,0 m, measured from the lower edge of the machine.

Further information can be found in the installation plan. The installation plan is available online.

Connecting the compressed air

⚠ Risk of injury.
Uncontrolled escaping compressed air or medium-pressure hoses whipping around can cause injury.
Work on the compressed air system must only be carried out by trained specialists.

- The compressed air used must, as a minimum, comply with EN 12021 (UK: (BS) EN 12021) or local regulations governing compressed gases for breathing apparatus.
- The reprocessing procedure requires a constant medium pressure of no more than 600 kPa at a peak capacity of < 4,1 l/min. This pressure must be maintained at a constant level throughout the entire process. Observe the relevant specifications from the air regulator manufacturers.
  To expel the residual moisture remaining in the air regulator after reprocessing, a peak capacity of approximately 55 l/min is required.
- A connection with a socket is required on the customer's side. The connection must be equipped with a stopcock, a venting device and a means of monitoring the pressure.
- The customer must provide a suitable coupling for connection to the compressed air system, which allows for the connection of a medium-pressure hose with an external diameter of 10 mm.
- The cleaning machine comes with a medium-pressure hose approximately 2,9 m long, with an external diameter of 10 mm and an internal diameter of 7 mm, for connection to the compressed air system to be provided by the customer.
- The medium-pressure hose can be connected to the cleaning machine either directly or using the L-shaped plug connection provided.

Further information can be found in the installation plan. The installation plan is available online.

Programme chart

To adjust the programme parameters, see ▸ Extended settings ▸ Programme options ▸ Configure programmes.

Programmes for breathing apparatus

Programme	Application
Vario FB Special	Programme for cleaning lightly soiled breathing apparatus, e.g. from exercises (no real-life conditions), and load items without contact with mucous membranes, e.g. compressed air unit carrier frames and compressed air bottles.
Vario FB special plus	Programme for cleaning heavily soiled breathing apparatus and load items without contact with mucous membranes, e.g. compressed air unit carrier frames and compressed air bottles.
Vario FB Chem	Programme for cleaning and disinfecting lightly soiled breathing apparatus, e.g. from exercises (no real-life conditions), and load items with contact with mucous membranes, e.g. masks and air regulators.
Vario FB Chem plus	Programme for cleaning and disinfecting heavily soiled breathing apparatus and load items with contact with mucous membranes, e.g. masks and air regulators.

Additional programmes

Programme	Application
Reactivation	Programme for manual reactivation of the water softener. This can be run to avoid being forced to run a reactivation programme during busy periods.
Cold water rinsing	Programme for rinsing the wash cabinet, for rinsing overflowing brine after refilling reactivation salt or for rinsing heavily soiled load items, e.g. for pre-rinsing soiling, residual disinfectant or to prevent items drying out and to prevent incrustation before running a full programme. Cold water is used for rinsing, holding time: 2 min
Drain	For draining wash water, e.g. after a programme cancellation.
Drying	Available for machines with active drying. Programme for drying load items.

Service programmes for Customer Service	
Service cycle	**Do not use for reprocessing load items!** Service programme to be performed by Customer Service or a suitably qualified specialist. Special process chemicals are required for the programme.

Height With machine lid Without machine lid	 835 mm (adjustable + 60 mm) 820 mm (adjustable + 60 mm)
Width	598 mm
Depth + control panel Depth with door open	598 mm + 41 mm 1.200 mm
Wash cabinet dimensions: Height Width Depth of upper basket/lower basket	 520 mm 530 mm 474 mm/520 mm
Weight of cleaning machine (net): Without drying With active drying	 74 kg 81 kg
Max. load capacity of open door	37 kg
Maximum load weight Upper basket + lower basket/mobile unit Mobile unit/lower basket (without upper basket)	 8 kg + 16 kg 24 kg
Voltage, rated load, fuse rating	See data plate
Mains connection cable	Approx. 1,8 m
Water connection temperature: Cold water Hot water DI water	 max. 20 °C max. 60 °C (UK: 60 °C) max. 60 °C (UK: 60 °C)
Static water pressure	1.000 kPa overpressure
Minimum water connection flow pressure: Cold water Hot water DI water	 100 kPa (UK: 200 kPa) 40 kPa (UK: 200 kPa) 30 kPa (UK: 200 kPa)
Recommended water connection flow pressure: Cold water Hot water DI water	 ≥ 200 kPa ≥ 200 kPa ≥ 200 kPa
DI water connection without pressure (optional)	8,5–60 kPa
Water inlet hose	Approx. 1,7 m
Drain hose	Approx. 1,4 m
Delivery head	Min. 0,3 m, max. 1,0 m
Drainage length	Max. 4,0 m

Technical data

Compressed air: Quality Static medium pressure (max.) Peak capacity: in process for expelling residual moisture	 EN 12021 (UK: (BS) EN 12021) 600 kPa < 4,1 l/min approx. 55 l/min
Medium-pressure hose: External diameter Internal diameter Length (included)	 10 mm 7 mm approx. 2,9 m
Operation (according to IEC/EN 61010-1): Ambient temperature Max. relative humidity linear decrease to Min. relative humidity	 5 °C to 40 °C 80 % for temperatures up to 31 °C 50 % for temperatures up to 40 °C 10 %
Storage and transportation conditions: Ambient temperature Relative humidity Air pressure	 -20 °C to 60 °C 10 % to 85 % 500 hPa to 1060 hPa
Altitude above sea level (according to IEC/EN 61010-1)	Up to 2.000 m
Protection category (according to IEC 60529)	IP21
Degree of soiling (according to IEC/EN 61010-1)	2
Overvoltage category (according to IEC 60664)	II
Noise level in dB (A), sound pressure LpA during cleaning and drying phases	< 70
WiFi standard	802.11 b/g/n
WiFi frequency band	2400-2483,5 MHz
Maximum WiFi transmission power	< 100 mW
VDE radio suppression, EMC equipment class (according to EN 61236-1)	B
VDE electrical safety	IEC/EN 61010-1, IEC 61010-2-040
CE marking	Machinery Directive 2006/42/EC
UKCA mark (UK only)	The Supply of Machinery (Safety) Regulations 2008
Manufacturer address	Miele & Cie. KG, Carl-Miele-Straße 29, 33332 Gütersloh, Germany

Disposal of the packing material

The packaging is designed to protect the machine against transportation damage. The packaging materials used are selected from materials which are environmentally friendly for disposal and should be recycled.

Recycling the packaging reduces the use of raw materials in the manufacturing process and also reduces the amount of waste in landfill sites.

Disposing of your old appliance

Electrical and electronic appliances contain many valuable materials. They also contain certain materials, compounds and components which were essential for their correct functioning and safety. These could be hazardous to human health and to the environment if disposed of with household waste or if handled incorrectly. Please do not, therefore, dispose of your old appliance with household waste.

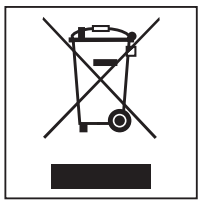

Instead, please make use of officially designated collection and disposal points to dispose of and recycle electrical and electronic appliances in your local community, with your dealer, with Miele or with the manufacturer, free of charge. By law, you are solely responsible for deleting any personal data from the old appliance prior to disposal. You are legally obliged to remove any old batteries which are not securely enclosed by the appliance and to remove any lamps without destroying them, where this is possible. These must be taken to a suitable collection point where they can be handed in free of charge. Please ensure that your old appliance poses no risk to children while being stored for disposal.

Australia and New Zealand:
Please dispose of it at your local community waste collection / recycling centre for electrical and electronic appliances. You are also responsible for deleting any personal data that may be stored on the appliance prior to disposal. Please ensure that your old appliance poses no risk to children while being stored prior to disposal.

Miele

United Kingdom
Miele Co. Ltd., Fairacres, Marcham Road
Abingdon, Oxon, OX14 1TW
Professional Sales, Tel: 0845 365 6608
E-mail: professional@miele.co.uk
Internet: www.miele-professional.co.uk

Australia
Miele Australia Pty. Ltd.
ACN 005 635 398, ABN 96 005 635 398
Level 4, 141 Camberwell Road, Hawthorn East, VIC 3123
Tel: 1300 731 411
Internet: www.miele-professional.com.au
E-mail: professional.sales@miele.com.au

China Mainland
Miele Electrical Appliances Co. Ltd.
No. 82, Shimenyi Road, JingAn District,
Shanghai, China, P.R.C, Post Code: 200040
Phone: +86 21 6157 3500, Fax: +86 21 6157 3511
E-mail: info@miele.cn, Internet: www.miele.cn

Hong Kong, China
Miele (Hong Kong) Ltd.
41/F - 4101, Manhattan Place
23 Wang Tai Road, Kowloon Bay, Hong Kong
Tel: (852) 2610 1025, Fax: (852) 3579 1404
Email: customerservices@miele.com.hk
Website: www.miele.hk

India
Miele India Pvt. Ltd.
1st Floor, Copia Corporate Suites,
Commercial Plot 9, Mathura Road, Jasola,
New Delhi - 110025
E-mail: customercare@miele.in, Website: www.miele.in

Ireland
Miele Ireland Ltd.
2024 Bianconi Ave., Citywest Business Campus,
Dublin 24
Tel: (01) 461 07 10, Fax: (01) 461 07 97
E-Mail: info@miele.ie, Internet: www.miele-professional.ie

Malaysia
Miele Sdn Bhd
Suite 12-2, Level 12
Menara Sapura Kencana Petroleum
Solaris Dutamas No. 1, Jalan Dutamas 1
50480 Kuala Lumpur, Malaysia
Phone: +603-6209-0288
Fax: +603-6205-3768

New Zealand
Miele New Zealand Limited
IRD 98 463 631
8 College Hill
Freemans Bay, Auckland 1011, NZ
Tel: 0800 464 353
Internet: www.miele-professional.com.au
E-mail: professional.sales@miele.com.au

Singapore
Miele Pte. Ltd.
29 Media Circle, #11-04 ALICE@Mediapolis
Singapore 138565
Tel: +65 6735 1191, Fax: +65 6735 1161
E-Mail: info@miele.com.sg
Internet: www.miele.sg

South Africa
Miele (Pty) Ltd
63 Peter Place, Bryanston 2194
P.O. Box 69434, Bryanston 2021
Tel: (011) 875 9000, Fax: (011) 875 9035
E-mail: info@miele.co.za
Internet: www.miele.co.za

United Arab Emirates
Miele Appliances Ltd.
Showroom 1, Eiffel 1 Building
Sheikh Zayed Road, Umm Al Sheif
P.O. Box 114782 - Dubai
Tel. +971 4 3044 999, Fax. +971 4 3418 852
800-MIELE (64353)
E-Mail: info@miele.ae
Website: www.miele.ae

Manufacturer: Miele & Cie. KG, Carl-Miele-Straße 29, 33332 Gütersloh, Germany

Alteration rights reserved / Publication date: 2026-05-27 M.-Nr. 13 087 040 / 00

CE UK CA