Miele

User manual
Dishwashers

Always read the operating instructions and the installation sheet before setting up, installing, and commissioning the appliance. This prevents both personal injury and damage to the machine.

en-CA HG07-W M.-Nr. 12 779 881

Contents

Warnings and safety instructions . **4**

Notes on the operating instructions **13**
Notes on the layout 13
Items included 14
Optional accessories 14

Guide to the appliance **15**
Machine overview 15
Lower basket 16
Control panel 17

Caring for the environment **20**

Initial commissioning **21**
Opening the door 21
Closing the door 22
Networking 22
Basic settings 23
Setting the language 23
Requirements for networking 23
Setting up Miele@home (depending on model) 23
Setting the time 23
Setting the water hardness 24
Activating AutoDos 24
Reactivation salt 25
Filling the salt reservoir 26
Refilling the salt 27
Rinse aid 27
Adding rinse aid 28
Filling the rinse aid reservoir 28

Settings **29**
Opening the Settings menu 29
Changing settings 29
Closing the Settings menu 29
Language 30
Time 30
Water hardness 30
AutoDos (automatic dispensing) 32
Rinse aid 32
Save Extras 32
Miele@home (depending on model) 33
Performing Scan & Connect 33
Remote control (depending on model) 35
Remote Update (depending on model) 35
SmartStart (depending on model) 36
EcoStart 37
Temperature 38
Display brightness 38
Volume 39
Memory 39
Refill indicators 39
AutoOpen 40
2nd interim rinse 40
Knock2open 40
BrilliantLight 41
SaniWash Cycle 41
Water connection 41
Legal Information 41
Copyrights and licenses for operator and control software 42
Copyrights and licenses for the communication module 42
Showroom 43
Factory default 43
Information 43

Caring for the environment **44**
Energy-saving dishwashing 44

Loading the dishwasher **45**
General information 45
Loading examples 47
Upper basket 49
Adjusting the upper basket 52
Lower basket 53
Filters 59
Cutlery tray 60
Loading the 3D MultiFlex Tray 60

Detergent **61**
Active ingredients 61
Detergent dispensing 62

Automatic dispensing / AutoDos 62
Activating AutoDos 63
Inserting a PowerDisk 63
Manual detergent dispensing 64
Detergent dispensing 64
Adding detergent 65

Operation **66**
Switching on the dishwasher 66
Selecting a program 66
Display of program cycle time 67
Starting a program 67
End of the program 68
Energy management 68
Turning off the dishwasher 68
Unloading the dishwasher 69
Interrupting a program 69
Cancelling or changing a program ... 69

Options **70**
Timer 70
Activating MobileStart 74
Displaying the operating hours 74

Program overview **76**

Extra options **82**
Selecting extra options 82

Cleaning and care **84**
Cleaning the wash cabinet 84
Cleaning the door and the door seal 84
Cleaning the control field 84
Cleaning the reflector panel 84
Cleaning the appliance front 85
Cleaning the AutoDos 85
Cleaning the spray arms 87
Checking the filters in the wash cabinet 90
Cleaning the filters 91
Cleaning the drain pump 92

Frequently asked questions **93**
Technical problems 93
Fault messages 94
Door release 94
Water intake fault 95
Water drainage fault 96
Fault in the AutoDos (automatic dispensing) 97
Spray arm fault 99
General dishwasher problems 99
Noises 100
Poor cleaning results 101

Technical Service **105**
Contact in the event of a fault 105
Warranty 105

Installation **106**
Water inlet 106
Water drainage 108

Sound emission testing **111**

Warnings and safety instructions

This dishwasher complies with all current local and national safety requirements. Inappropriate use can, however, lead to personal injury and material damage.

Please observe the installation sheet and read the operating instructions carefully before setting up the dishwasher and using it for the first time. They both contain important information on the installation, safety, use, and maintenance of the machine. This prevents both personal injury and damage to the dishwasher.

In accordance with standard IEC 60335-1, Miele expressly and strongly advises that you read and follow the instructions in the section on installing the dishwasher as well as the safety instructions and warnings.
Miele cannot be held liable for injury or damage caused by non-compliance with these instructions.

Keep the installation sheet and the operating instructions in a safe place and pass them on to any future owner.

Correct application

▶ This dishwasher is intended for use in the home and in similar environments, for example
– in shops, offices, and similar work settings
– on agricultural estates
– by guests in hotels, motels, bed and breakfasts, and other typical home settings.

▶ This dishwasher is not suitable for outdoor use.

▶ This dishwasher is intended for use at altitudes of up to 4,000 m above sea level.

▶ This dishwasher must only be used for cleaning domestic dishware and cutlery. All other types of use are not permitted.

▶ This dishwasher is not intended for use by people with reduced physical, sensory, or mental capabilities or lack of experience and knowledge, unless they have been given supervision and instruction concerning its use by a person responsible for their safety. They may only use the dishwasher without supervision if they have been shown how to use it in a safe manner. They must be able to recognize and understand the possible consequences of incorrect operation.

Safety with children

▶ Children under 8 years of age must be kept away from the dishwasher unless they are constantly supervised.

▶ Children must not be allowed to clean or maintain the appliance.

▶ Children should be supervised in the vicinity of the dishwasher. Never allow children to play with the dishwasher. There is a danger that children might shut themselves in the dishwasher.

▶ If the automatic door opening mechanism is active, keep young children away from the area in which the door opens. There is a danger of injury in the unlikely event of a fault with the opening mechanism.

▶ Danger of suffocation. While playing, children may become entangled in packaging material (such as plastic wrapping) or pull it over their head, presenting the risk of suffocation. Keep packaging material away from children.

▶ Keep children away from detergents. Detergents cause severe skin burns and severe eye damage. They can cause burning in the mouth and throat, or inhibit breathing. It is therefore important to keep children away from the dishwasher when the door is open. Detergent residues could still be present in the machine. Seek medical advice immediately if a child has swallowed or inhaled any detergents.

Technical safety

▶ Unauthorized installation, maintenance, and repairs can cause considerable danger for the user. Installation, maintenance, and repairs must only be carried out by a qualified technician.

▶ Damage to the dishwasher can compromise your safety. Before using the dishwasher and in particular following transport, check it for any visible damage. Never use a damaged dishwasher.

▶ The electrical safety of the dishwasher can only be guaranteed when correctly grounded. It is most important that this basic safety requirement is fulfilled. If in doubt, the electrical installation should be checked by a qualified electrician.
Miele cannot be held liable for the consequences of an inadequate or lack of grounding system (e.g., electric shock).

▶ Temporary or permanent operation on an autonomous power supply system or a power supply system that is not synchronized with the grid power supply (e.g., island networks, back-up systems) is possible. A prerequisite for operation is that the power supply system complies with the specifications of EN 50160 or an equivalent local standard.
The function and operation of the protective measures provided in the domestic electrical installation and in this Miele product must also be maintained in isolated operation or in operation that is not synchronized with the grid power supply, or these measures must be replaced by equivalent measures in the installation. As described, for example, in the current version of VDE-AR-E 2510-2 or an equivalent local standard.

▶ If the dishwasher is plugged into the domestic electricity supply using a 3-pin plug with a grounding contact (it must not be hard-wired), the electrical socket must be easily accessible after the dishwasher is installed so that it can be disconnected from the domestic electricity supply at any time.

▶ There must be no electrical sockets behind the dishwasher because the building-in niche may be too small. Danger of overheating and fire risk if the dishwasher were to be pushed up against a plug.

▶ The dishwasher must not be installed underneath a cooktop. The high temperatures radiated by cooktops could damage the dishwasher below. For the same reason, the dishwasher must not be installed next to open fires or other appliances that give off heat, such as heaters etc., not normally found in a kitchen.

▶ Ensure that the connection data on the dishwasher's data plate (fuse rating, frequency, and voltage) match the domestic electricity supply. This data must correspond in order to avoid the risk of damage to the dishwasher. Compare these before connecting the appliance to the electricity supply. If in any doubt, consult a qualified electrician.

▶ Do not connect the dishwasher to the domestic electricity supply until it has been fully installed and any adjustments have been made to the door springs.

▶ The dishwasher may only be operated if the door-opening mechanism is working correctly. Otherwise, there could be a risk of danger while the automatic door opening mechanism is active.
To check that the door opening mechanism is working correctly:

- The door springs must be evenly adjusted on both sides. They are correctly adjusted when the door remains stationary when left half open (approx. 45° opening angle). It is also important that the door cannot fall open.
- The door locking rail automatically retracts when the door opens at the end of the drying phase.

▶ Multi-socket adapters and extension leads do not guarantee the required safety of the appliance (risk of fire). Do not connect the dishwasher to the domestic electricity supply using a power bar or an extension cord.

▶ The dishwasher must not be used in a non-stationary location (e.g., on a ship).

▶ Do not install the dishwasher in a room where there is a risk of frost. Frozen hoses are at risk of tearing or bursting. The reliability of the electronic control unit may be impaired at temperatures below freezing point.

▶ To avoid any damage to the dishwasher, it must only be operated when it is connected to a fully vented plumbing system.

▶ The built-in Miele Waterproof system offers reliable protection against water damage if the following conditions are met:

- Installation has been carried out correctly.
- The dishwasher is properly maintained and parts are replaced in case of noticeable damage.
- The water supply faucet is turned off during longer absences from the home (e.g., while on vacation).

The Waterproof system will work even when the dishwasher is switched off. However, the dishwasher must remain connected to the domestic electrical supply.

▶ The water-connection pressure needs to be between 50 and 1,000 kPa.

▶ A damaged dishwasher could be dangerous. If the dishwasher gets damaged, turn it off at the electricity supply immediately and contact your Miele dealer or Miele Service.

▶ The manufacturer’s warranty will be invalidated if the appliance is not repaired by a Miele authorized service technician.

▶ We recommend replacing defective components with original spare parts. If original Miele spare parts are installed correctly, Miele ensures full compliance with safety requirements and the warranty remains valid.

▶ During installation, maintenance, and repair work, the dishwasher must be disconnected from the domestic electricity supply (turn it off and withdraw the plug from the socket).

▶ If the power cable is damaged, it must only be replaced with a specific cable of the same type (available from Miele Service). For safety reasons, this must only be done by Miele Service or a service technician authorized by Miele.

▶ Do not place the dishwasher on the water inlet hose. The water inlet hose must be free of kinks and able to move freely after installation.
Do not install the water inlet hose or the power cord next to a heat source, such as a hot water pipe.
Do not expose the water inlet hose or the power cord to household cleaners, vapours or other corrosive substances (such as chloride). Damage to the power cord or water inlet hose can lead to electric shocks or water damage.
Check the water inlet hose or the power cord for leaks and damage after installation and every 6 months thereafter. Have the water inlet hose or the power cord replaced if there are signs of damage.
The same applies to the drain hose.

▶ This dishwasher is supplied with a special light bulb to cope with particular conditions (e.g., in terms of temperature, moisture, chemical resistance, abrasion resistance, and vibration). This light bulb must only be used for the purpose for which it is intended. The light bulb is not suitable for room lighting. Replacement light bulbs may only be installed by an authorized technician or by Miele Customer Service.

Correct installation

▶ The dishwasher must be installed and connected in compliance with the supplied installation sheet.

▶ Be careful before and while installing the dishwasher. Some metal parts pose a risk of injury / being cut. Wear protective gloves.

▶ The way in which the dishwasher is installed must not cause doors to be blocked when the door is automatically opened (AutoOpen function).

▶ If the dishwasher is being used behind closed cabinet fronts (e.g., doors), ensure that the automatic door opening mechanism is not blocked.
The cabinet units used must be sufficiently resistant to moisture.
The installation space must be well ventilated.

▶ The dishwasher must be correctly aligned horizontally to ensure problem-free operation.

▶ In order to ensure stability, built-under and integrated dishwashers must only be installed under a continuous countertop which is secured to adjacent cabinetry.
In addition, the dishwasher must be screwed to the adjacent cabinetry (see Installation instructions).

▶ A sink in the adjacent cabinet of the dishwasher must be carefully sealed. Regularly check for leaks to avoid damage to the dishwasher.

▶ The dishwasher must only be built into a tall unit if additional safety precautions are taken. In order to safely install the appliance in a tall unit, please use the tall unit installation kit and observe the installation sheet provided. Otherwise there is the danger of the unit tipping over.

▶ The door springs must be evenly adjusted on both sides. They are correctly adjusted when the door remains stationary when left half open (approx. 45° opening angle). It is also important that the door cannot fall open.
The appliance must only be operated with properly adjusted door springs.
If the door cannot be adjusted properly, contact Miele Customer Service.

The minimum/maximum weight of the front panel is quoted in the technical data for your dishwasher on the Miele website.

Correct use

▶ Do not use solvents in the wash cabinet. There is a danger of explosion.

▶ Dishwasher detergents can cause burning on the skin and in the eyes, nose, mouth, and throat. Avoid contact with detergents. Do not inhale powder detergents. Do not swallow dishwasher detergents. Seek medical attention immediately if detergent has been swallowed or inhaled.

▶ Avoid leaving the dishwasher door open unnecessarily. You could injure yourself on the opened door or trip over it.

▶ Do not sit, stand, or lean on the opened door. The dishwasher can tip over. This could injure you or damage the dishwasher.
When fully loaded baskets are pulled out, even small additional loads on the open door can cause the dishwasher to tip over.

▶ Dishware may be very hot at the end of the program. Allow dishware to cool until it is comfortable enough to handle before unloading them.

▶ Only use detergent and rinse aid formulated for domestic dishwashers. Do not use liquid dish soap.

▶ Do not use any commercial or industrial detergents. These may cause material damage, and there is a risk of a severe explosive chemical reaction (such as an explosive oxyhydrogen gas reaction).

▶ Do not fill the rinse aid reservoir with powder or liquid detergent. This will cause damage to the rinse aid reservoir.

▶ Do not fill the AutoDos with powder or liquid detergent. Loose detergent will damage the AutoDos.

▶ Do not fill the salt reservoir with powder or liquid detergent. Dishwasher detergent will damage the water softener.

▶ Use only special, coarse-grained reactivation salt or other pure evaporated salt. Other types of salt may contain insoluble components which can cause the water softener to malfunction.

▶ In dishwashers with a cutlery basket (depending on model), knives and forks should be placed with the handles upwards in the basket for safety reasons. Knives and forks placed with the handles downwards pose a danger of injury.

▶ Plastic items which cannot withstand being washed in hot water, such as disposable plastic containers or plastic cutlery, should not be cleaned in the dishwasher. The high temperatures in the dishwasher may cause them to melt or lose shape.

▶ If you use the timer option, the detergent compartment must be dry. Wipe dry with a cloth first if necessary. The detergent will clump together if the detergent compartment is not dry, and this may mean that it is not fully rinsed out.

Accessories and spare parts

▶ Only use original Miele accessories. If other parts are used, warranty, performance, and, if applicable, product liability claims will be invalidated.

Transport

▶ Damage to the dishwasher can compromise your safety. Before using the dishwasher, check it for any visible transport damage. Never use a damaged dishwasher.

▶ Only transport the dishwasher in an upright position so that no water flows into the electrical controls, as this would cause faults.

▶ If you wish to transport the dishwasher, empty it and securely fasten all loose parts such as baskets, hoses, and power cables.

Disposal of your old dishwasher

▶ Remove the door of the dishwasher so that children cannot become trapped inside.

FCC Declaration of Conformity

▶ These devices comply with FCC Rules Part 15. This equipment has been tested and found to be in compliance with the limits for a Class B digital device, pursuant to Part 15 of the FCC Rules of Operation and is subject to the following conditions:
These devices may not cause harmful interference.
These devices must accept any interference received, including interference that may cause undesired operation.

FCC Radiation Exposure Statement

▶ This equipment complies with FCC radiation exposure limits set forth for an uncontrolled environment. This equipment should be installed and operated with minimum distance 8" (20 cm) between the radiator and your body.

Industry Canada Statement

▶ This digital apparatus does not exceed the Class B limits for Radio Noise Emissions from digital apparatus set out in the Radio Interference Regulations of the Canadian Department of Communications.

Complies with Canadian ICES-003 Class B specifications.

These operating instructions apply to several different dishwasher models of different heights.
The different dishwasher models will be named as follows:
normal = dishwasher measuring 81.5 cm high (built-in appliance)
or 85.5 cm high (freestanding appliance)
XXL = dishwasher measuring 85.5 cm high (built-in appliance).

Notes on the layout

Warnings

⚠ Information which is important for safety is highlighted in a thick framed box with a warning symbol. They alert you to the potential danger of injury to people or damage to property.
Read the warnings carefully and follow the instructions and directions.

Notes

Notes contain information that is particularly important to follow.
They are highlighted by a thickly framed box.

Additional information and comments

Additional information and comments are contained in a narrow frame.

Instructions for the user

Instructions on how to operate the dishwasher are identified by marked operating steps. They explain the procedure step by step.
Operating steps are indicated by a black square bullet point.

Example:
■ Select the desired setting and press *OK* to confirm.

Display

Information that is shown in the dishwasher display appears in a special font similar to the display text.

Example:
When the message Close the door appears in the display ...

Notes on the operating instructions

Items included

The following items are supplied:

- dishwasher
- operating instructions for operating the dishwasher
- installation sheet for installing the dishwasher
- other installation accessories for installing the dishwasher (see installation sheet)
- funnel for filling the reactivation salt
- additional printed matter and add-ons if required

Optional accessories

Products specially tailored to your dishwasher – such as dishwasher detergent, cleaning agents, care products, and accessories – are available from the Miele online store or from Miele Service.

You can access the Miele online store via the following QR code:

Machine overview

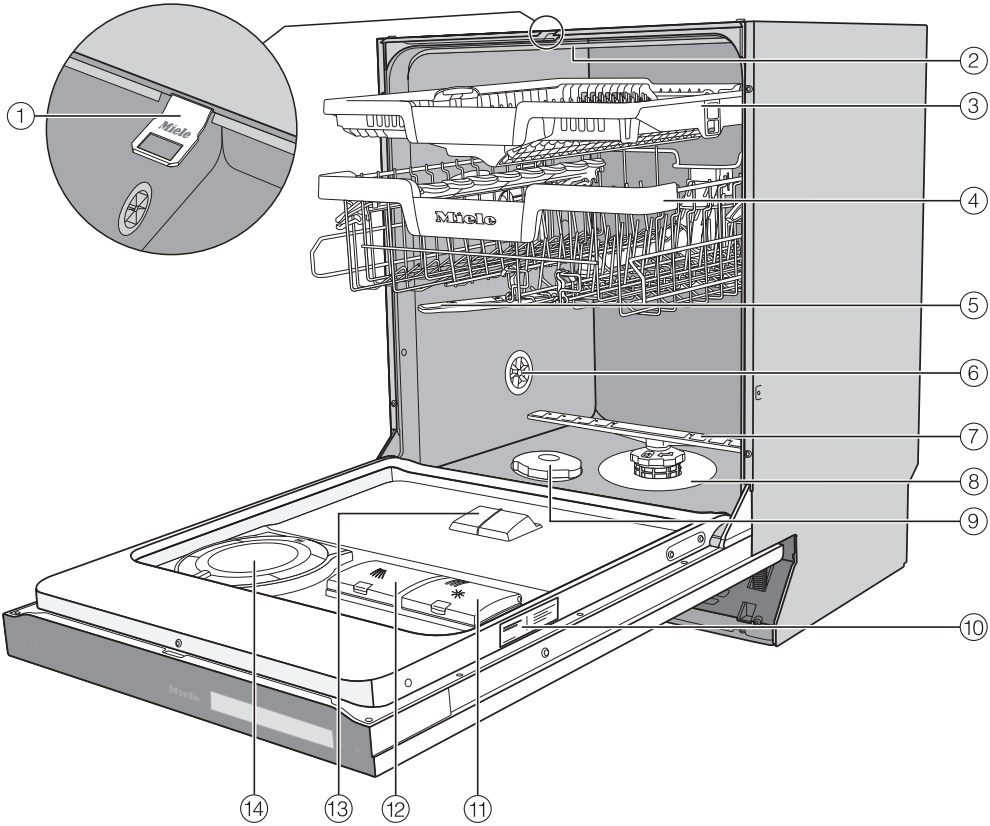

① Door locking pins
② Top spray arm
③ 3D MultiFlex cutlery tray
④ Upper basket (depending on model)
⑤ Middle spray arm
⑥ Aeration valve
⑦ Lower spray arm
⑧ Filter combination
⑨ Salt reservoir
⑩ Data plate
⑪ Rinse aid reservoir
⑫ Detergent compartment
⑬ AutoDos detergent outlet
⑭ AutoDos (automatic dispensing)

Lower basket (see next page)

Lower basket

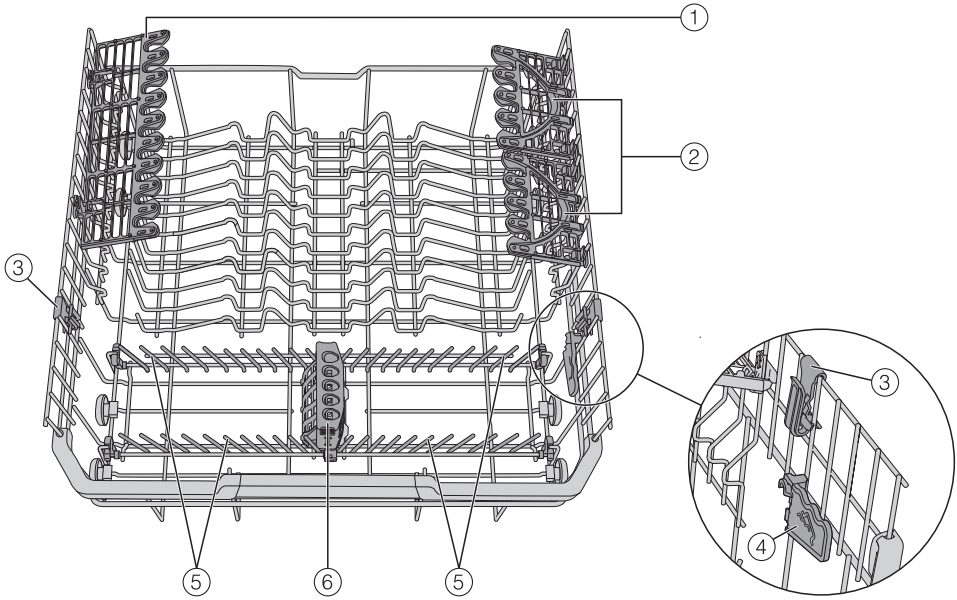

① Glassware holder

② FlexCare Glass & Bottle

③ MultiClip

④ XL-Assist

⑤ Hinged spikes

⑥ StrawClean

Control panel

① In-operation indicator light
For indicating an ongoing wash program when the door is closed.

② ⏻ *On / Off* sensor button
For turning the dishwasher on and off.

③ *Remote* sensor button
For activating / deactivating the "Remote start" option (depending on model).

④ Touch display
For further information, see "Display functions" under "Guide to the appliance".

⑤ *Back* sensor button
For navigating back to the previous menu or deleting values which have been set previously.

⑥ *Home* sensor button
For returning to the Programs menu.

Display functions

The display is used to select or set the following:

- the program
- the options
- the timer
- the Settings

The display can show the following:

- the program name
- the program stage
- the estimated time left for the program to run
- any relevant fault messages and information

To save energy, the dishwasher turns off after a few minutes if you do not press any sensor buttons during this time.
Touch the ⏻ sensor button to turn the dishwasher back on.

The sensor buttons on the control panel and in the display react to fingertip contact.

The touch display can be scratched by pointed or sharp objects, e.g., pens.
Only touch the display with your fingers.

Touch the required menu option to select it.

The currently selected setting is marked in orange and can be changed.

The *OK* sensor button in the display is used to confirm a message or setting and to move to another menu level.

To exit a sub-menu again, use the *Back* sensor button.

Touch the *Home* sensor button at any time to return to the Programs menu.

If you do not press any sensor buttons for several seconds, the display will revert to the previous menu. You will then have to enter your settings again.

Examples of how to operate the appliance

Main menu

Use the *Back* sensor control to switch from the Programs menu to the main menu.

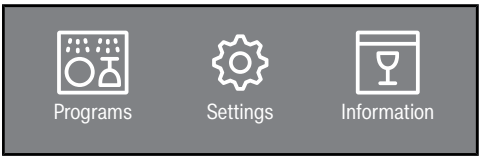

In the main menu, you can select between the Programs, Settings, and Information menus.

In the Programs menu, you can select the programs.

You can alter the dishwasher's controls to suit changing requirements in the Settings menu (see "Settings").

You can display a variety of information about your dishwasher in the Information menu (see "Information" under "Settings").

Lists

You can scroll to the right or the left by swiping your finger across the display.

The orange scroll bar at the bottom of the display indicates that further options are available.

You can change the order of programs listed in the Programs menu by pressing and holding a program name and dragging it to the place you want.

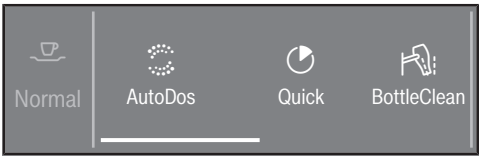

After selecting a program, the Extra options menu is displayed. This is where you can select any extra options you want and activate the timer.

Numerical values

You can set numerical values in some menus.

You can set the numbers by touching the numerical keypad that you want to change.

You can then set the numbers using the ∨∧ sensor controls.

Use the *OK* sensor control to accept the set numerical value.

Keeping the relevant ∨ or ∧ sensor control pressed will increase or decrease the time automatically.

Caring for the environment

Disposal of the packaging material

The cardboard box and packaging materials protect the appliance during shipping. They have been designed to be biodegradable and recyclable.

Recycling the packaging reduces the use of raw materials in the manufacturing process and also the amount of waste.

Disposal of your old appliance

Electronic and electrical appliances contain many valuable materials. They also contain certain materials, compounds and components which were essential for the proper functioning and safe use of the equipment. These could be hazardous to your health and to the environment if disposed of with general waste or if handled incorrectly. Therefore, please do not dispose of your old appliance with general waste.

Consult with local authorities, dealers or Miele in order to dispose of and recycle electrical and electronic appliances. Miele assumes no responsibility for deleting any personal data left on the appliance being disposed. Please ensure that your old appliance is kept away from children until removal. Observe safety requirements for appliances that may tip over or pose an entrapment hazard.

Every dishwasher is tested at the factory. There will be residual water in the machine from this test. It is not an indication that the dishwasher has been used previously.

Opening the door

In some programs, the door automatically opens slightly to assist the drying process.
This function can be deactivated, if preferred (see “AutoOpen” under “Settings”).

This dishwasher has a motorized door opener which is activated by knocking on the door front (Knock2open function).

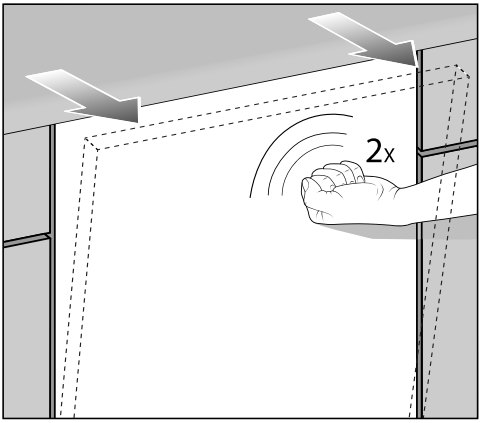

- Knock twice in quick succession on the top third of the door front.

The door will open a little.

- Hold the door at the top edge and pull the door out of the lock.

The door locking rail will retract.
The door lock rail must be retracted before you close the door again.

To prevent a technical fault, do not hold the door locking rail when retracting.

If the door is opened during operation, all functions are automatically interrupted.

You can deactivate this function (see “Knock2open” under “Settings”).

⚠ Risk of scalding due to hot water.
During operation, water in the dishwasher may be very hot.
During operation, only open the door with extreme caution.

⚠ Risk of injury due to door opening automatically.
The door may open automatically at the end of a program.
Keep the area around the door free of obstructions.

⚠ Caution: Avoid blocking doors.
The automatic door opening function could cause doors to be blocked.
Install the dishwasher so that the door does not block any other doors or cabinet fronts when it opens automatically.

Closing the door

- Push the baskets in.
- Push the door until it clicks shut.

The door will then close automatically.

At the end of the program, if the AutoOpen function is on, the door locking rail must be retracted before the door is closed. Otherwise, the door locking rail will hit the door.

⚠ Risk of crushing due to the door closing.
When closing the door, you are at risk of shutting your fingers in it.
Do not put your hand inside the door as it is closing.

Networking

Your dishwasher is equipped with an integrated Wi-Fi module. The Wi-Fi module makes it possible to connect to your home network and to use the Miele app on a mobile device.

Once your dishwasher has been connected via Wi-Fi, the connection is automatically re-established every time it is switched on.

Make sure that your Wi-Fi network signal is strong enough in the place where you intend to install your dishwasher.

Connecting your dishwasher to your Wi-Fi network will increase energy consumption, even when the dishwasher is switched off.

Smart Extras via the Miele app*

Networking via the Miele app gives you access to numerous Smart Extras, including:

- Access status information.
- Use additional helpful functions.
- Keep your dishwasher up to date with the latest Miele developments via software updates.

You can find more detailed information about Smart Extras on the Miele website, in the Apple App Store®, or in the Google Play Store™.

*This is a separate digital offer from Miele & Cie. KG. The range of functions can vary depending on the model and the country. Acceptance of the General Terms and Conditions and Privacy Policy for Miele digital products and services in the Miele app required. Miele reserves the right to change or discontinue the digital offers at any time.

Basic settings

Turning on the dishwasher

- Open the door.
- Turn the dishwasher on using the ⏻ sensor control.

The welcome screen will appear when the dishwasher is turned on and the welcome melody will sound.

For further information about the display functionality, see “Display functions” under “Machine description”.

Setting the language

The display will change automatically to the screen for setting the language.

- Select the language you want as well as the country if applicable.

For further information on setting the language, see “Language” under “Settings”.

The set language is marked orange.

Requirements for networking

Note the following requirements for networking:

1. A home network is available at the installation site.
   Have the Wi-Fi password ready.
2. The Miele app is available on a mobile device.
3. You have a user account in the Miele app.

Miele app

The Miele app is available to download free of charge from the Apple App Store® or from the Google Play™ store.

Download on the App Store

GET IT ON Google Play

Setting up Miele@home (depending on model)

The message Activate Miele@home? will appear on the display.

- If you want to set up Miele@home now, select the Yes option.

Useful tip: To postpone setup until later, select the No option.

There are 2 ways of connecting your dishwasher to your Wi-Fi network:

- Select the connection method you wish to use.

1. App
2. WPS

You will then be guided by the display and the Miele app.

For further information on Miele@home, see “Miele@home” under “Settings”.

Setting the time

The time is updated automatically if a connection is established with the Wi-Fi network.

The display will then change to the screen for setting the clock format and the time of day.

The current time of day must be set before you can use the timer option.

- Select the setting you want for the clock format.
- Set the hours and the minutes and confirm by pressing *OK*.

Setting the water hardness

The display changes to the screen for setting the water hardness.

- You should program the dishwasher to the correct water hardness for your area.
- Your local water authority will be able to advise you of the water hardness level in your area.
- Where the water hardness fluctuates, e.g., between 10–16 gr/gal (10–15 °dH), always program the dishwasher to the higher value (16 gr/gal (15 °dH) in this example).

It is useful to know your water hardness so that you can provide the service technician with this information in the event of any service calls.

Enter the water hardness below:

_____ gr/gal (°dH)

The dishwasher is programmed at the factory for a water hardness level 1 gr/gal (1 °dH).

- Set the water hardness level in your area and confirm with *OK*.

See “Water hardness” under “Settings” for more information.

Activating AutoDos

The display changes to the settings screen for AutoDos (see “Automatic dispensing / AutoDos” under “Detergent”).

Even if you do not wish to use AutoDos, you must remove the tab from the AutoDos lid before running the first program sequence (see “Activating AutoDos” under “Detergent”).

You can activate AutoDos.
If you do not wish to use AutoDos, you can manually dispense the detergent via the detergent compartment (see “Manual detergent dispensing” under “Detergent”).

- Select the setting you want and confirm with *OK*.

This setting applies to all programs and you can change it in a program’s Extra options menu.

Prompts will then appear in the display.

After confirming these prompts with *OK*, the messages Add salt and run the “Rinse salt” program and Refill rinse aid may appear.

- Add salt and rinse aid if necessary (see “Reactivation salt” and “Rinse aid” under “Before using for the first time”).
- Select *OK* to confirm the messages.

The selected program will be shown briefly in the display.
Next, the estimated energy and water consumption may be shown for the chosen program for several seconds.
Then the display will show the estimated cycle time for the program selected.

Reactivation salt

In order to achieve good cleaning results, the dishwasher needs to operate with soft water. Hard water results in a build-up of calcium deposits on dishware and in the dishwasher. Domestic water with a hardness level higher than 5 gr/gal (5 °dH) must be softened. This occurs automatically in the integrated water softener. The water softener is suitable for a water hardness level of up to 73 gr/gal (70 °dH).

In order to be reactivated, the water softener requires reactivation salt. Depending on the water hardness level (< 22 gr/gal, or < 21 °dH), reactivation salt may not be required if combination detergents are being used (see “Active ingredients” under “Detergents”).

If the water in your area is very soft and constantly **lower than 5 gr/gal (5 °dH),** you do **not** need to add reactivation salt. The salt refill indicator will automatically turn off after the water hardness has been set accordingly (see “Water hardness” under “Settings”).

⚠ Damage to the water softener from detergent.
Dishwasher detergent will damage the water softener.
Do not fill the salt reservoir with powder or liquid detergent.

⚠ Damage caused by using unsuitable salts.
Some types of salt may contain insoluble components which can cause the water softener to malfunction.
Use only special, coarse-grained reactivation salt or other pure evaporated salt.

If you only ever use combination detergent products in your dishwasher, you can turn off both refill reminders if you wish (see “Refill reminders” under “Settings”).

Please make sure that if you stop using combination detergents, you refill the reactivation salt and rinse aid. Turn the refill reminders back on if required.

Filling the salt reservoir

Before filling the salt reservoir for the first time, you must fill it with approx. 1.5 L of water to enable the salt to dissolve.

Once the dishwasher has been commissioned, there is always sufficient water in the salt reservoir.

- Remove the lower basket from the wash cabinet and unscrew the salt reservoir cap.

⚠ Danger of corrosion due to saline solution.

Water or saline solution will run out of the salt reservoir when the cap is opened. Salt solution that runs out can cause corrosion in the wash cabinet and to the load items.

The cap should therefore only be removed in order to refill the salt reservoir.

- Fill the salt reservoir with approx. 1.5 L of water (first use only).

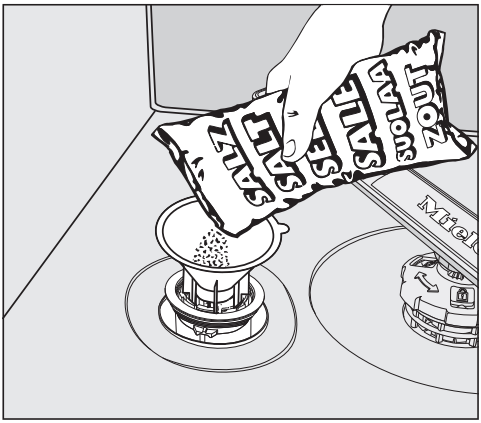

- Place the funnel provided over the salt reservoir and carefully fill with reactivation salt until the reservoir is full. The salt reservoir holds up to 2 kg of salt, depending on the type of salt used.
- Clean off salt residues from around the salt reservoir opening. Next, screw the salt reservoir cap on again firmly.
- Immediately after filling the salt reservoir and each time you remove the salt reservoir cap, run the Rinse salt program without load items in the dishwasher to dissolve and remove any traces of salt from the wash cabinet.

Refilling the salt

- When the refill reminder Add salt and run the "Rinse salt" program appears in the display, wait until the end of the program and then refill the salt reservoir.
- Confirm with *OK*.

The salt refill indicator will go out.

⚠ Danger of corrosion due to saline solution.
Salt solution that runs out can cause corrosion in the wash cabinet and to the load items.
Immediately after filling the salt reservoir and each time you remove the salt reservoir cap, run the Rinse salt program without load items in the dishwasher to dissolve and remove any traces of salt from the wash cabinet.

After the salt reservoir has been filled, the refill indicator may still appear in the display if the salt concentration has not yet reached the correct level. In this case, still confirm the message again with *OK*.

The salt refill indicator will be turned off if you have programmed the dishwasher for a water hardness below 0.9 mmoL/L (5°dH – German scale).

Rinse aid

Rinse aid is necessary to ensure water does not cling and leave marks on dishware during the drying phase and helps dishware dry faster after it has been washed.
Rinse aid is poured into the container and the amount set is dispensed automatically.

⚠ Liquid dish soap or detergent can cause damage.
Liquid dish soap and detergent can damage the rinse aid reservoir.
Only fill it with rinse aid formulated for domestic dishwashers.

Alternatively, you could use liquid citric acid at a concentration of up to 10%. The resulting rinsing and drying quality will not, however, be as good as when rinse aid is used.

⚠ Risk of acid damage.
The dishwasher can be damaged by high concentrations of acid.
Under no circumstances should you use citric acid with a higher acid content.

If you only ever wish to use combination detergent products in your dishwasher, you do not need to add rinse aid.
However, for optimum rinsing and drying results, use dishwasher detergent and add reactivation salt and rinse aid separately.

If you only ever use combination detergent products containing salt and rinse aid in your dishwasher, you can turn off both refill reminders if you wish (see “Refill reminders” under “Settings”).

Please make sure that if you stop using combination detergents, you refill the reactivation salt and rinse aid. Turn the refill reminders back on if required.

Adding rinse aid

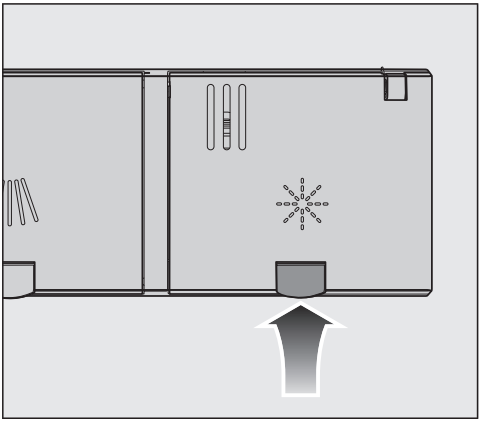

- Press the yellow button ✳ on the lid of the rinse aid reservoir.

The lid will spring open.

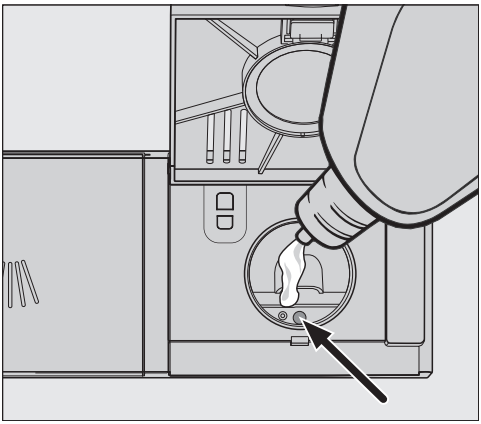

- Fill with rinse aid until the filling level indicator (arrow) changes to a dark colour while the door is horizontally open.

The rinse aid reservoir holds approximately 110 ml.

- Close the lid firmly until you hear it click into place. Otherwise, water can enter the rinse aid reservoir during a program.
- Wipe up any spilled rinse aid. This prevents over-foaming occurring during the next program.

You can adjust the rinse aid dosage for best wash results (see “Rinse aid” under “Settings”).

Filling the rinse aid reservoir

When ✳ Refill rinse aid appears in the display, the reservoir contains sufficient rinse aid for 2–3 programs only.

- Add rinse aid in plenty of time.
- Confirm with *OK*.

The rinse aid refill indicator will go out.

You can alter the dishwasher's controls to suit changing requirements by adjusting the settings (depending on model).

The settings can be altered at any time.

Opening the Settings menu

- Turn the dishwasher on using the ⏻ sensor control.

The Programs menu will appear in the display.

For further information about the display functionality, see "Display functions" under "Machine description".

- Switch to the main menu using the *Back* sensor control.
- Touch the Settings sensor control.

The display will change to the Settings menu.

Changing settings

- Select the setting you want to change.

The selected setting is marked in orange.

- Change the value displayed and confirm with *OK*.

or

- Touch an option to select it.
- To exit a sub-menu again, use the *Back* sensor button.

The display will revert to the menu level above.

Closing the Settings menu

- Touch the *Back* sensor button.

The display will change to the main menu.

Language ⚑

The display can be set to appear in one of several different languages.

You can change the language used in the display and also the country via the Language ⚑ sub-menu.

The flag after the word Language ⚑ serves as a guide if a language that you do not understand has been set.
In this case, keep selecting the menu option that has a flag after it until you reach the Language ⚑ sub-menu.

Time

The current time of day must be set before you can use the timer option.

Setting the clock format

You can select either a 24-hour or 12-hour clock.

■ Select the setting you want for the clock format.

Setting the time

You can set the current time of day.

■ Set the hours and the minutes and confirm by pressing *OK*.

The time of day has now been saved.

Water hardness

Your dishwasher is fitted with a water softener.

- You should program the dishwasher to the correct water hardness for your area.
- Your local water authority will be able to advise you of the water hardness level in your area.
- Where the water hardness fluctuates (e.g., between 10-16 gr/gal or 10–15 °dH), always program the dishwasher to the higher value (16 gr/gal or 15 °dH in this example).

If the water hardness in your area is available in a unit other than °dH, you can convert the values as follows:
1 °dH = 1.04 gr/gal = 0.18 mmol = 1.78 °fH

°d	gr/gal	°fH	Display
1	1	2	1
2	2	4	2
3	3	5	3
4	4	7	4
5	5	9	5
6	6	11	6
7	7	13	7
8	8	14	8
9	9	16	9
10	10	18	10

°d	gr/gal	°fH	Display
11	11	20	11
12	13	22	12
13	14	23	13
14	15	25	14
15	16	27	15
16	17	29	16
17	18	31	17
18	19	32	18
19	20	34	19
20	21	36	20
21	22	38	21
22	23	40	22
23	24	41	23
24	25	43	24
25	26	45	25
26	27	47	26
27	28	49	27
28	29	50	28
29	30	52	29
30	31	54	30
31	32	56	31
32	33	58	32
33	34	59	33
34	35	61	34
35	36	63	35
36	38	65	36
37-45	39-47	66-80	37-45
46-59	48-62	82-105	46-59
60	63	107	60
61-70	64-73	109-125	61-70

Setting the water hardness

- Select the water hardness level in your area and confirm with *OK*.

AutoDos (automatic dispensing)

Automatic dispensing automatically adjusts the amount of detergent to the selected program.

If you want to extend the service life of the PowerDisk, you can reduce the dispensing quantity. The program's cleaning performance may decrease as a result.
If you want to improve the cleaning performance, you can increase the dispensing quantity. This reduces the service life of the PowerDisk.

Setting Dosage amount

For best results, you can adjust the dispensing quantity of the PowerDisk.

- Select the Dosage amount menu option.
- Select the desired setting.

Rinse aid

You can adjust the rinse aid dosage for best results.
The rinse aid dosage can be set from 0 to 6 ml.
3 ml is the factory default setting.

The rinse aid dosage can turn out to be higher than the set value due to the automatic adjustment of the program.

If spots appear on dishware:

- Increase the rinse aid dosage.

If clouding or smearing appears on dishware:

- Decrease the rinse aid dosage.

Save Extras

You can set whether the selected extra options are to remain permanently activated for the respective program.

Miele@home (depending on model)

Your dishwasher is equipped with an integrated Wi-Fi module.

You can connect your dishwasher to your Wi-Fi network.
This will increase the energy consumption, even when the dishwasher is turned off.

The “Settings” and “Miele@home settings” menus will be added as additional menu options.

Make sure that your Wi-Fi network signal strength is strong enough at the installation site of your dishwasher.

There are a number of ways of connecting your dishwasher to your Wi-Fi network:

Performing Scan & Connect

Initial commissioning has been carried out without Miele@home having been set up.

- Scan the QR code.

If you have installed the Miele app and have a user account, you will be taken directly to the networking steps.

If you have not yet installed the Miele app, you will be taken to the Apple App Store® or the Google Play Store™.

- Install the Miele app and set up a user account.
- Scan the QR code again.

The Miele app will guide you through the setup process.

App

The Miele app is available to download free of charge from the Apple App Store® or from the Google Play Store™.

Download on the App Store

GET IT ON Google Play

- Select the App menu option and confirm with *OK*.
- Follow the instructions in the app.

Once your dishwasher is connected to your Wi-Fi network, you can use the app to carry out the following tasks:

- Control your dishwasher remotely.
- Call up information on the operating status of your dishwasher.
- Call up information on the program sequence of your dishwasher.
- Set up a Miele@home network with other Wi-Fi-enabled Miele appliances.

WPS

As an alternative to networking via the Miele app, you can connect your dishwasher to your Wi-Fi network using WPS (Wireless Protected Setup).

Your Wi-Fi router must support WPS.

- Select the WPS menu option and confirm with *OK*.
- Confirm the message Press the WPS button on your router with *OK*.
- Activate the WPS function on your router within 2 minutes.
- Once the connection has been established, confirm the message with *OK*.

If the connection fails, you have probably not activated WPS on your router quickly enough. Repeat the steps above.

Deactivate

If you do not wish to use the Wi-Fi module of your dishwasher, you can turn it off.

- Select the Deactivate menu option.

In the Miele@home menu, the Activate menu option will now be displayed instead of Deactivate.

Activate

If you wish to connect your dishwasher to your Wi-Fi network, you can turn on the Wi-Fi module.

- Select the Activate menu option.

In the Miele@home menu, the Deactivate menu option will now be displayed instead of Activate.

Displaying the Connection status

You can call up the current connection status of your dishwasher.

- Select the Connection status menu option and confirm with *OK*.
- Use the ∨∧ sensor buttons to consecutively call up the Wi-Fi signal strength, the name of your router, and the associated IP address.
- Select *OK* to confirm the messages.

Set up again

This menu option only appears if you have already connected your dishwasher to your Wi-Fi network.

Connecting via the app

- Select the App menu option.
- Follow the user navigation in the app.

Connecting with WPS

- Select the WPS menu option.
- Follow the instructions in the display.

Reset network configuration?

This menu option only appears if you have already connected your dishwasher to your Wi-Fi network.

You can use this menu option to reset all Wi-Fi module settings to the factory default settings.

The network configuration should be reset whenever a dishwasher is being disposed of or sold, or if a used dishwasher is being put into operation. This is the only way to ensure that all personal data has been removed and the previous owner will no longer be able to access the dishwasher.

- Select the Reset network configuration? menu option.
- Select the Yes option.

Remote control (depending on model)

This menu option will only be displayed if you have connected your dishwasher to your Wi-Fi network (see “Miele@home” under “Settings”).

If you wish to permanently turn off the Remote control option, you can do this under this menu option. The *MobileStart* sensor control will then no longer be available to select until you change this setting again.

Even if the Remote control option is turned off, you can use the Miele app to call up information about your machine. However, you cannot start any programs or change any settings from it.

Remote Update (depending on model)

The RemoteUpdate menu option is only displayed and can only be selected if the requirements for using Miele@home have been met (see “Miele@home” under “Initial commissioning”).

The RemoteUpdate function is used for updating the software in your dishwasher. If an update is available for your dishwasher, it will automatically download it. Updates will not be installed automatically. They must be initiated manually.

If you do not install an update, you can continue to use your dishwasher as usual. However, Miele recommends installing updates.

Activating / deactivating

The RemoteUpdate function is activated as standard. Available updates will be downloaded automatically but will only be installed if you initiate installation manually.

Deactivate RemoteUpdate if you do not want any updates to be downloaded automatically.

Running RemoteUpdate

Information about the content and scope of a RemoteUpdate will be provided in the Miele app.

A message will appear in your dishwasher display if a software update is available.

You can install the update immediately or postpone this until later. When the appliance is turned on again, you will be reminded about the update.

Deactivate RemoteUpdate if you do not want to install the update.

The update may take several minutes.

Please note the following information about the RemoteUpdate function:

- You will only receive a message when an update is available.
- Once an update has been installed, it cannot be undone.
- Do not turn the dishwasher off during the update. Otherwise, the update will be aborted and will not be installed.
- Some software updates can only be carried out by Miele Service.

SmartStart (depending on model)

This menu option will only be displayed if you have connected your dishwasher to your Wi-Fi network (see “Miele@home” under “Settings”).

The SmartStart function is used for starting your dishwasher automatically at a time when your energy supplier’s electricity rates are most economical.

To use this function you may need further technical accessories.

If you have activated SmartStart Permitted, the Timer menu of the selected program will no longer show EcoStart but will instead show SmartStart. The dishwasher will then start within the timeframe specified when it receives a signal from the energy supplier.
If it has not received a signal from the energy supplier by the latest possible start time, the dishwasher will start automatically.

EcoStart

In order to run your dishwasher in the most economical way, you can use the EcoStart option to take advantage of your electricity supplier's cheaper electricity rates (see "Timer" under "Options").
With this option selected, your dishwasher will start automatically at your electricity supplier's cheapest rate times.

To use this option, you must first set up to 3 electricity rate time zones in which the dishwasher can start. You can allocate different priorities to these time zones. The time with the cheapest electricity rate will be given Priority 1.

Contact your electric supplier to find out the times of the cheapest electricity rates.

Once the electricity rate times have been set, you can use the EcoStart option to set the latest finish time required for each program.
The dishwasher will then start automatically during the cheapest energy rate time period. The program will end at the set finish time at the latest.

Setting the electricity rate times

Before you can use the EcoStart option, you must set at least one electricity rate time.

- Select an electricity rate time from R1–R3 to set.

The start of the electricity rate time selected will be displayed.

- Set the hours and minutes for the start time.
- Select End.

The end of the electricity rate time selected will be displayed.

- Set the hour and minutes for the finish time and confirm both with *OK*.

The electricity rate time will be saved.

You can now select the priority of the saved electricity rate time.

- Select the priority you want.

The selected settings are displayed.

The electricity rate time will be activated.

Changing the electricity rate times

You can change the start, finish, or priority of an electricity rate time.

- Select an electricity rate time from R1–R3 to change.
- Select the setting you want to change.
- Change the setting and confirm with *OK*.

The selected settings are displayed.

The change will be saved.

Deleting the electricity rate times

You can delete the settings for an electricity rate time and in doing so deactivate the EcoStart option for this time zone.

- Select an electricity rate time from R1–R3 to delete.
- Select 🗑 Delete.
- Confirm the query with Yes.

The settings for the electricity rate time selected will be reset.

- Confirm the message with *OK*.

The electricity rate time has now been deleted.

Temperature

You can set whether the temperature should be displayed in °C / Celsius or °F / Fahrenheit.

The factory default setting is °C / Celsius.

Display brightness

You can set the display brightness to one of 7 different levels on the bar chart.

Volume

A sequence of buzzer tones will sound at the end of the program or if there is a fault, as long as the buzzer has been activated.

Buzzer in the event of a fault

In the event of a fault, the alarm tone will sound 4 times at intervals with a short pause between each set of tones.

The alarm tone that sounds when there is a fault cannot be deactivated.

Buzzer

The buzzer at the end of a program will sound 4 times at intervals with a short pause between each set of tones.

The volume of the buzzer at the end of the program can be selected from one of 7 levels. If no volume is selected, the audible signals are turned off.

Keypad tone

An audible tone sounds each time a sensor button outside of the touch display is pressed.

The volume for the keypad tone can be set to one of 7 different settings. If no volume is selected, the keypad tone is turned off (except the ⏻ *On / Off* sensor button).

Welcome melody

If you turn the dishwasher on or off, a brief melody will sound.

You can turn the melody off.

Memory

When the Memory function is switched on, the most recently started program is saved.

When you switch the dishwasher off and back on again after the end of a program, the last program started will be selected. This may increase energy consumption.

Refill indicators

If you only ever use combination detergent products or automatic dispensing using Miele PowerDisks (if available), you can turn off the refill reminders for reactivation salt and rinse aid if you wish.

Please make sure that if you stop using combination detergents, you refill the reactivation salt and rinse aid. Switch the refill reminders back on.

AutoOpen

In some programs, the door automatically opens slightly to assist the drying process.

This function can be deactivated if you wish. However, this negatively affects the drying process in most cases.

⚠ Risk of injury due to door opening automatically.

The door may open automatically at the end of a program.

Keep the area around the door free of obstructions.

⚠ Risk of damage due to steam.

Steam from the dishwasher could damage delicate cabinet units and the edges of countertops when you open the door at the end of the program if the fan is no longer running.

If you have deactivated the automatic door opening function but would still like to open the door at the end of the program, then make sure that you open the door fully.

2nd interim rinse

You can choose this function to increase the cleaning performance of the programs with a second interim rinse.

When this function is activated, water consumption may increase.

If this function is switched on, it will be applied to all programs until it is switched off again.

Knock2open

The door opens if you knock twice in quick succession on the top third of the door front.

The function can be deactivated, in which case the door has to be equipped with a handle to open it.

BrilliantLight

This dishwasher is equipped with interior lighting.
When the door is open, the lighting turns off automatically after 15 minutes.

You can also turn off the interior lighting permanently.

SaniWash Cycle

If you mainly use low-temperature programs (< 50°C / 122°F), there is a risk of bacteria and unpleasant odours building up in the wash cabinet (see “Hygiene cycle” under “Cleaning and care”).

If this function is switched on, a message will be displayed recommending the use of a high-temperature program after several low-temperature programs have been run.

Water connection

You can set your water connection type.

- If you select Automatic, the dishwasher detects which water connection is currently being used and automatically selects the right setting.
- Select Cold water, if you are only using a cold water connection.
- Select Warm water, if you are only using a hot water connection.

Legal Information

You can view legal information about the open source licenses for your dishwasher.

Copyrights and licenses for operator and control software

For the purpose of operating and controlling the appliance, Miele uses proprietary or third-party software that is not covered by open source licensing terms. These items of software/ software components are protected by copyright. The copyright powers of Miele and third parties must be respected.

In addition, the appliance contains software components which are distributed under open source licensing terms. You can access these open source components along with the associated copyright notices, copies of the valid licensing terms, and any further information in the appliance under the menu option Settings | Legal information | Open source licences. The liability and warranty arrangements for the open source licences displayed at this location only apply in relation to the respective rights holders.

Copyrights and licenses for the communication module

For the purpose of operating and controlling the communication module, Miele uses proprietary or third-party software that is not covered by open source licensing terms. These items of software/software components are protected by copyright. The copyrights held by Miele and third parties must be respected.

In addition, the communication module contains software components which are distributed under open source licensing terms. The open source components contained in the appliance along with the corresponding copyright notices, copies of the licensing terms valid at the time, and any further information can be accessed locally via IP using a web browser *(http://<IP address>/Licenses)*. The liability and warranty arrangements for the open source licences displayed in this location only apply in relation to the respective rights holders.

Showroom

For demonstration purposes only.

The dishwasher is equipped with a demo mode for showroom use.

Factory default

You can reset all dishwasher settings to the factory default settings.

Wi-Fi module settings (where applicable) have to be reset separately (see “Miele@home” under “Settings”).

- Select Reset settings?.
- Select the Yes option and confirm with *OK*.

Information

You can display the following information about your dishwasher:

- Operating hours (see also “Displaying the operating hours” under “Options”)
- Program sequences
- Total consumption
- Fault memory
- Data plate
- Software version

- Touch the ⌂ sensor control.
- Switch to the main menu using the ⮌ sensor control.
- Select the Information menu option.
- Select the information you want and confirm your choice with *OK*.

Energy-saving dishwashing

This dishwasher is exceptionally economical in its use of water and electricity.
For best results, follow these tips:

- Washing in a dishwasher generally uses less water and energy than washing by hand.
- There is no need to pre-rinse items under running water. This would unnecessarily increase water and energy consumption.
- Make full use of the baskets without overloading the dishwasher. This results in the most economical dishwashing in terms of energy and water consumption.
- Choose a program that best suits the degree of soiling and the type of dishware being washed (see “Program overview”).
- Select the *Normal* program for energy-saving dishwashing. This program is the most efficient in terms of its combined energy and water consumption for cleaning dishware with a normal level of soiling.
- If you have a hot water connection, choose the *Energy Saver* program (see “Water intake” under “Installation”). The wash water will not be heated up during this program.
- Follow the detergent manufacturer’s recommendations on detergent dosage.
- If you are manually dosing the detergent, reduce the amount of detergent by $^{1}/_{3}$ when using powder or liquid detergent if the baskets are only half full.

General information

Remove coarse food residues from dishware.

There is no need to pre-rinse items under running water.

⚠ Damage can be caused by ash, sand, wax, lubricant, or paint.
These substances will soil the dishwasher and can then no longer be removed.
Do not wash items soiled with these substances in the dishwasher.

Dishes can be loaded anywhere in the baskets, but the following notes should be observed:

- Do not place dishware or cutlery inside other pieces. They will cover one another.
- Load the dishware so that water can access all surfaces. This ensures that dishware will be properly cleaned.
- Make sure that all items are securely positioned.
- Hollow items such as cups, glasses, and pots should be placed upside down in the baskets.
- Tall, narrow, hollow items such as champagne glasses should be placed in the centre of the basket rather than in the corners. This ensures the hollow items are more easily accessed by the water jets.
- Wide based items should be placed at an angle so that water can run off them freely.
- The spray arms must not be blocked by items which are too tall or hang through the baskets. Test for free movement by manually rotating the spray arms.
- Make sure that small items cannot fall through the holders in the baskets. Small items such as lids should therefore be placed in the 3D MultiFlex tray.

Some foods such as carrots, tomatoes, or ketchup may contain natural dyes. These dyes can discolour plastic items in the dishwasher if large quantities of these foods are in contact with the dishware inside the machine. The stability of plastic items is not affected by this discolouration. Washing silverware can also cause plastic items to discolour.

Items not suitable for dishwashers:

- Wooden cutlery and dishware or items with wooden parts. These may discolour and fade. The glue used in these items is not dishwasher-safe and wooden handles may come loose after being washed in a dishwasher.
- Craft items, antiques, valuable vases, and decorative glasses are also not dishwasher-safe.
- Plastic items which are not heat-resistant may become deformed.
- Copper, brass, tin, and aluminum items. These may discolour or become dull.
- Colours painted over a glaze. This type of decoration may fade after a number of cycles.
- Delicate glasses and glassware containing lead crystal. Clouding may occur over time.

Silver

⚠ Damage caused by using unsuitable detergents.
If silverware is cleaned using an unsuitable cleaning agent, it can be irreparably damaged.

Silverware that has been in contact with foods containing sulphur can discolour. These include egg yolk, onions, mayonnaise, mustard, legumes, fish, fish brine, and marinades.
Silverware previously cleaned with a **silver polish** may still be damp or spotted at the end of a program, where water has not run off smoothly.

Useful tip: Rub the silverware dry with a cloth.

⚠ Damage due to caustic alkaline detergents.
Aluminum parts (e.g., the grease filters of ventilation hoods) can be damaged by caustic alkaline detergents. In extreme cases, there is a risk of an explosive chemical reaction (such as an explosive oxyhydrogen gas reaction).
Aluminum components must not be cleaned in the dishwasher with caustic alkaline commercial or industrial detergents.

Useful tip: When purchasing new dishware and cutlery, make sure they are dishwasher-safe if you want to wash them in the dishwasher.

Glass care

- Clouding may occur on glasses after frequent washing. When washing delicate glassware in the dishwasher, ensure that only a special glass-care program with very low temperatures is selected (see “Program overview”). This will reduce the risk of clouding.
- Purchase glassware that is dishwasher-safe (e.g., Riedel glassware).
- Use detergents with glass protective additives.

Loading examples

Loading for 10 standard place settings with cutlery tray

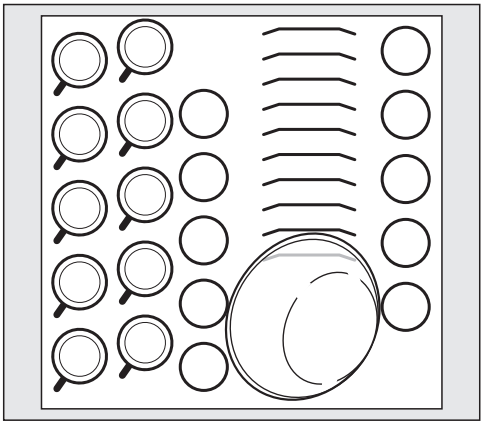

Upper basket

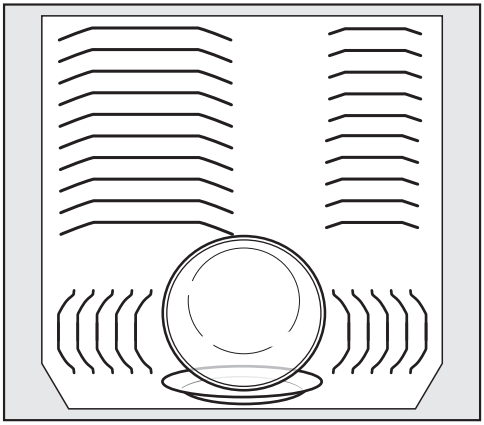

Lower basket

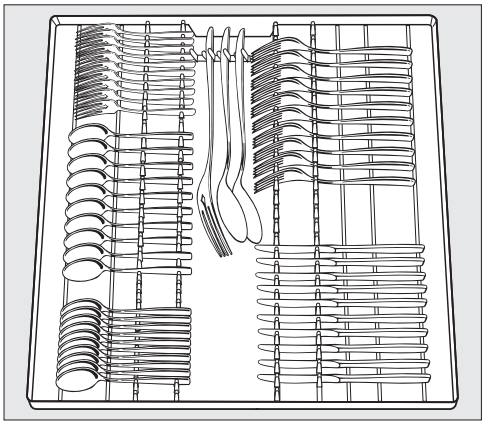

Cutlery tray

Loading for 16 standard place settings with cutlery tray

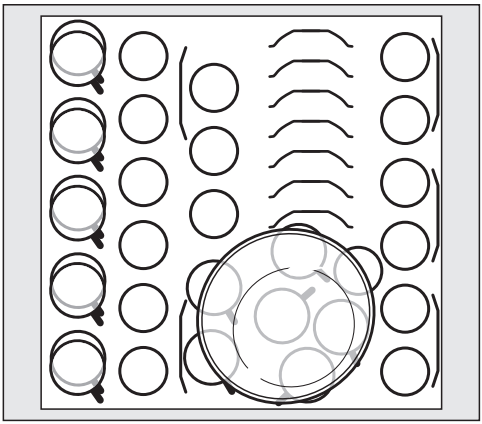

Upper basket

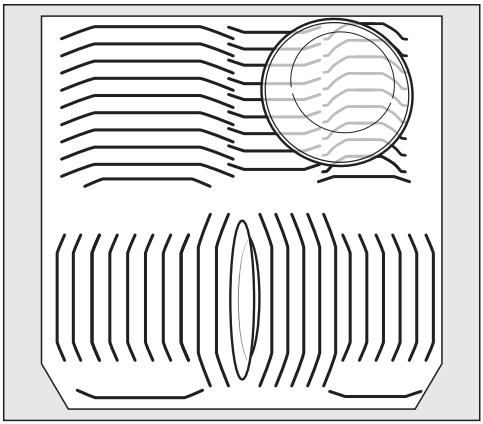

Lower basket

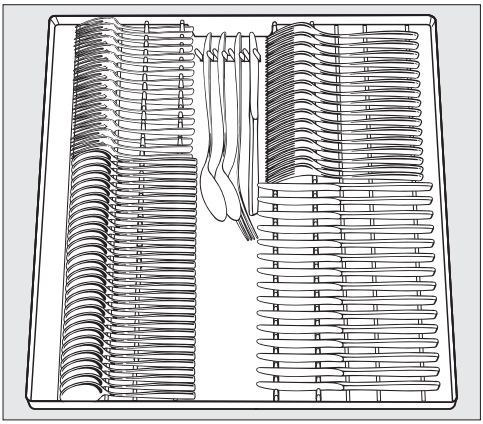

Cutlery tray

Upper basket

Loading the upper basket

⚠ Risk of damage due to water leakage.
If you run the dishwasher without the upper basket, water can leak out of the dishwasher.
Only run the dishwasher with the upper basket in place (except during the Tall Items program, if available).

- Use the upper basket for small, lightweight, and delicate items such as cups, saucers, glasses, dessert bowls, etc.
  Shallow pans or casserole dishes can also be placed in the upper basket.
- Long items such as soup ladles and mixing spoons should be placed lying down across the front of the upper basket.

Loading the FlexCare cup rack

You can put cups, small bowls, and flat dishware on the FlexCare cup rack. Glasses can be arranged along the FlexCare cup rack so they sit securely during the program.

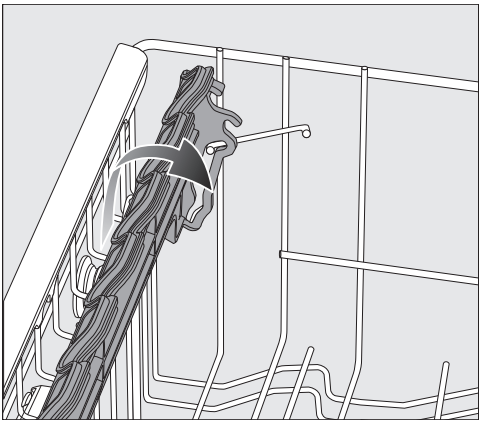

- Lower the FlexCare cup rack to do so.
- Raise the FlexCare cup rack upward to make room for tall items.

Adjusting the FlexCare cup rack

You can set the height and depth of the cup rack at 2 different levels so that it can accommodate larger cups and so that taller items can be placed underneath it.

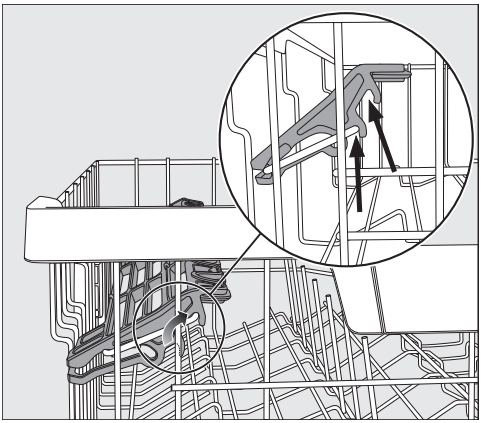

- Pull the cup rack upwards and click it into the desired position (see arrow).

Loading the silicone elements of the FlexCare cup rack

The silicone elements in the cup rack are specially designed to hold tall glasses with long stems securely.

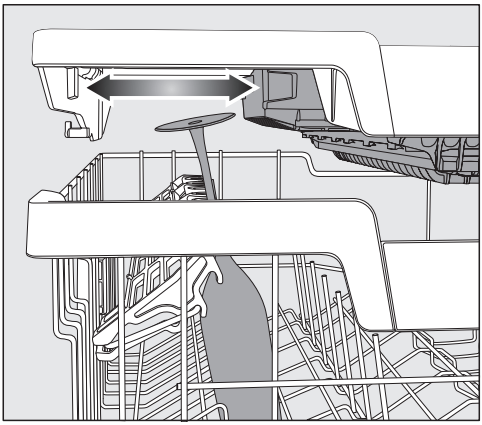

- Lower the cup rack and lean the glasses against the openings.
- If you wish you can adjust the left insert of the 3D MultiFlex Tray to make space for taller glasses (see “3D MultiFlex Tray” under “Cutlery”).

Lowering the spikes

On both right-hand rows of spikes, you can lower every other spike to make it easier to arrange larger dishware, e.g., cereal bowls.

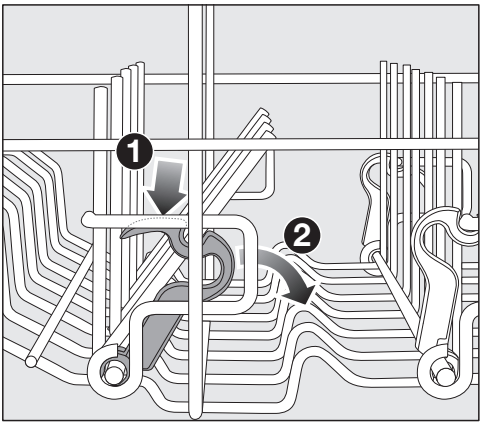

- Press the yellow lever downward ❶, and then lower the dark grey spikes ❷.
- Place the bowls vertically in the row of spikes.

Adjusting the upper basket

In order to gain more space for taller items in the lower basket or upper basket, the upper basket can be adjusted on 3 levels with 3/4" (2 cm) between each level.

The upper basket can also be set at an angle so that water can run off freely from recesses. Make sure, however, that the basket can slide smoothly in and out of the wash cabinet.

- Pull out the upper basket.

Raise the upper basket:

- Lift the basket up until it clicks into place.

Lower the upper basket:

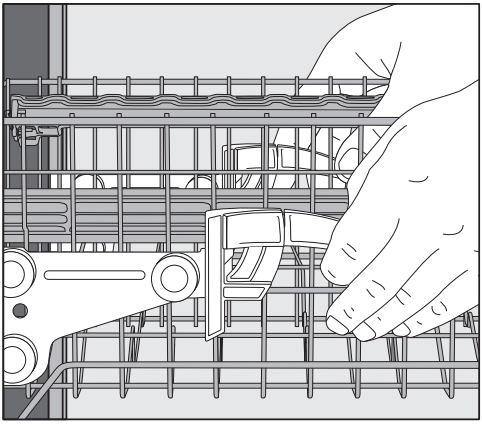

- Pull upward on the levers at either side of the upper basket.
- Adjust the basket to the desired height and then push the levers securely back down into position.

When adjusting the upper basket, make sure that tall plates in the lower basket do not block the middle spray arm.

Lower basket

Loading the lower basket

- Place larger and heavier items such as plates, serving platters, saucepans, bowls, etc., in the lower basket. Glasses, cups, and small plates and saucers can also be placed in the lower basket.

Loading the MultiComfort area

The rear section of the lower basket is used for washing cups, glasses, plates, pots, and pans.

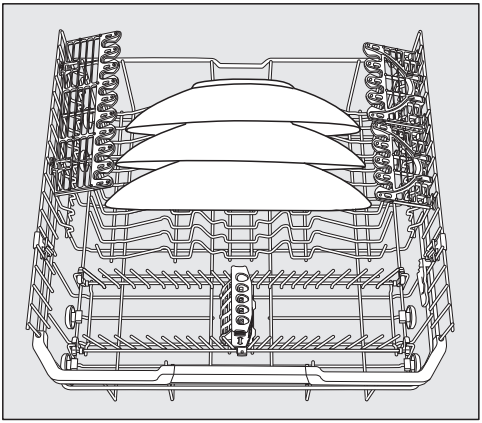

- Place very large plates in the middle of the lower basket.

Useful tip: When tilted, plates up to 13 3/4" (35 cm) in diameter can be accommodated.

Lowering the spikes

The rows of spikes at the front are used for loading plates, soup bowls, platters, dessert bowls, and saucers.

Both rows of spikes can be lowered to make more room for large items such as pots, pans, and serving dishes.

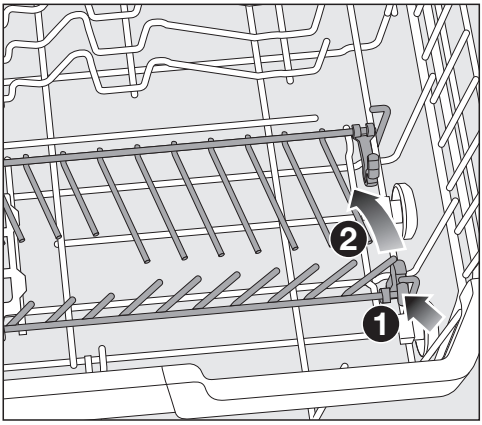

- Press the yellow lever downward ❶, and then lower the rows of spikes ❷.

FlexCare Glass & Bottle

The glass and bottle holders are used to wash stemware, tall glasses, and bottles.

Adjusting the FlexCare Glass & Bottle

You can set the glass and bottle holders at 2 different heights.

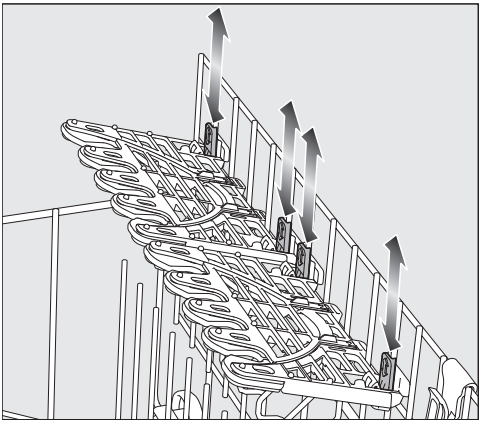

- Slide the glass and bottle holders to the desired height until the catches click into place at the top or the bottom.
- The glass and bottle holders can be raised to make more room for tall items.

Loading the glassware holders

The silicone elements in the glassware holder provide a stable and secure hold for delicate stemware.

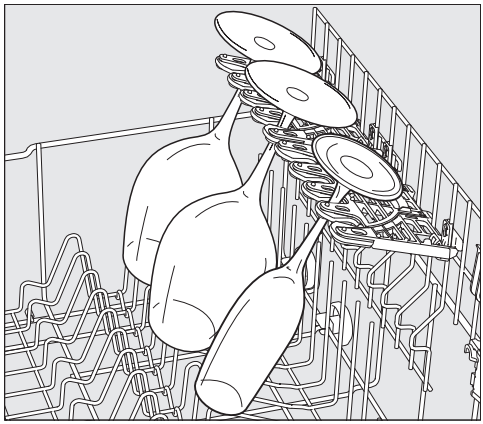

- Stemware such as wine glasses, champagne flutes, and beer glasses can be pinned into the openings of the glassware holders.

Loading the FlexCare Glass & Bottle

The glass and bottle holders can be used to keep tall, narrow, and hollow containers, e.g., beer glasses, bottles, vases, secure during a program.

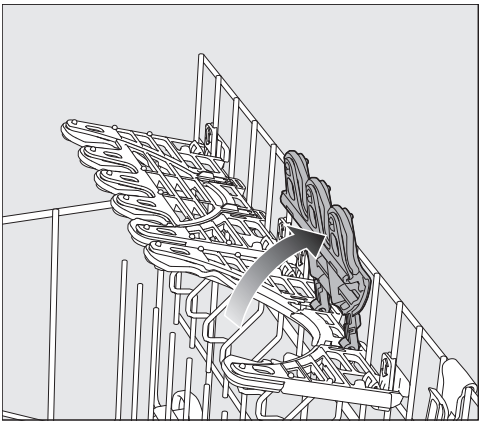

- The inserts in the glass and bottle holders can be raised to make more room for tall glasses or bottles.

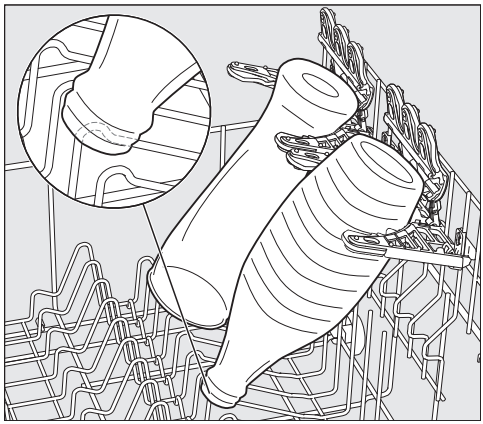

- Lean the containers into the holders.

Useful tip: For the best cleaning results, use the “BottleClean” extra options (see “BottleClean” under “Extra options”).

MultiClip

The MultiClips enable you to fasten light load items such as those made from plastic.

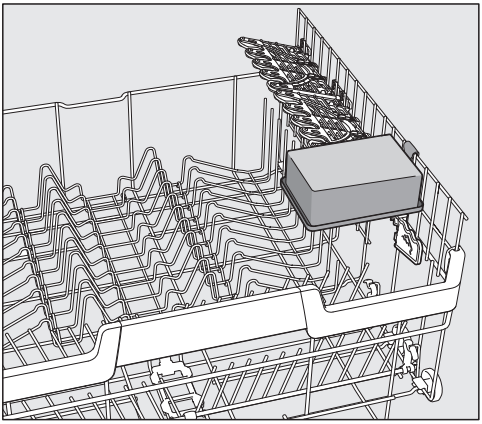

■ Secure light items to the MultiClips.

Make sure that dishware does not obstruct the middle spray arm.

XL-Assist

The XL Assist is used to secure large load items, e.g., pots and pans.

This allows the dishware to be tilted for better drying results. Smaller items of dishware can be positioned under the large items.

Loading the XL-Assist

Unfold the XL-Assist to support large items of dishware on it.

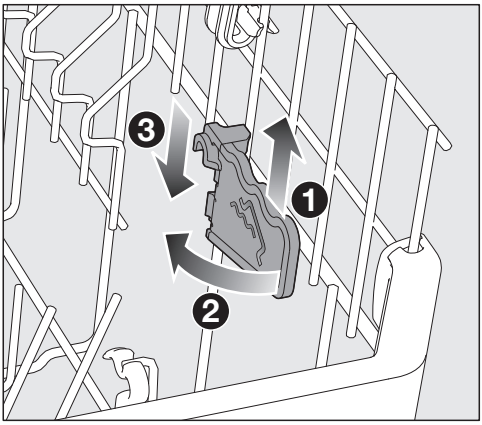

■ Slightly lift the XL-Assist ❶, fold it out ❷, and hook it back in the new position ❸.

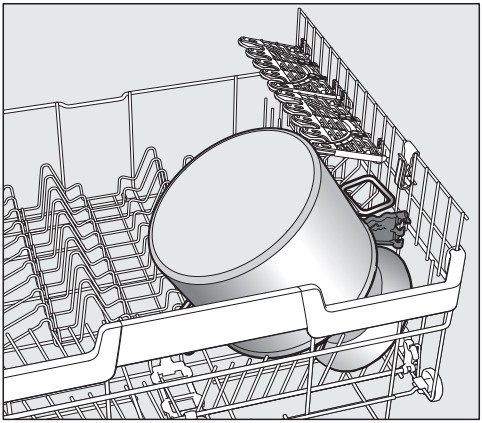

■ Place the edges of large dishware on the XL-Assist.

StrawClean

The drinking straw holder can accommodate 5 straight or bent straws with a maximum outer diameter of 12 mm.

Straws with a length of 10–25 cm are held particularly securely.

The best cleaning results will be obtained with straws made of glass or plastic with an inner diameter of more than 6 mm.

Useful tip: For the best cleaning results, use a program with Pre-rinse (see “Program overview”).

Loading the StrawClean

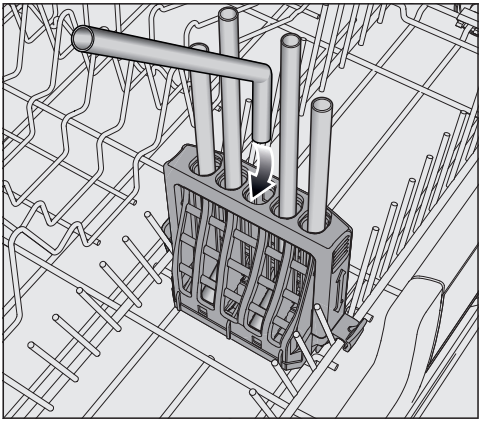

- Arrange bent straws with the short side down.

The spray jets of the middle spray arm must be able to flush through the straws.

Arrange larger items of dishware in the lower basket so that the straws in the StrawClean are not covered.

Adjusting the StrawClean

The adjustable bracket of the StrawClean ensures that the straws are held securely. Longer straws are held particularly securely.

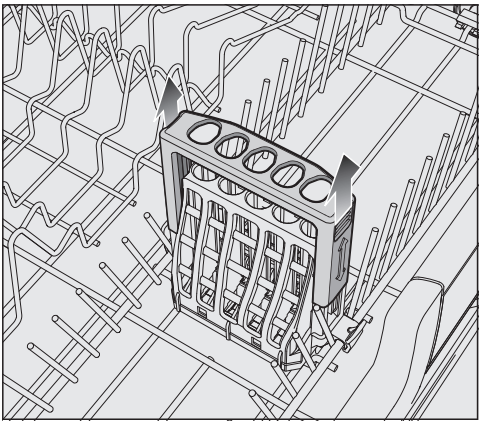

- To accommodate long straws, pull up the StrawClean bracket until it locks into the upper position.
- To adjust the bracket back to the lower position, press the bracket down against the resistance.

When adjusting the upper basket, make sure that a straw does not block the middle spray arm.

Removing the StrawClean

You can remove the StrawClean to get more space in the lower basket.

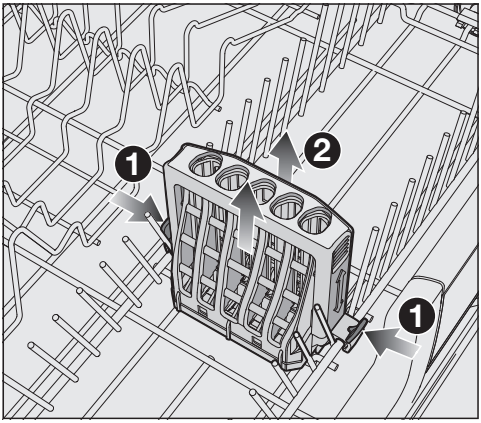

- Unlock the retainers on both sides of the StrawClean ❶ and remove it ❷.

When the StrawClean is inserted, one side of the rows of spikes cannot be folded down.

Filters

You can also wash Miele Ventilation Hood Filters.

Select the Filters program for optimum dishwashing results.

⚠ Damage caused by protruding parts.
Protruding parts can damage the dishwasher.
Load the filters in such a way that no corners protrude over the side of the basket.

⚠ Damage caused by wash items with sharp edges.
Heavy and sharp wash items can damage the coating of the basket struts.
Load the filters carefully.

⚠ Risk of scalding due to hot water.
At the end of the program, the filters may still contain hot water.
Be careful when unloading the filters.

Loading the filters

You can wash 2 ventilation hood filters in the upper basket and 2 filters in the lower basket at once.

- If you only want to wash 2 filters, put them in the upper basket.

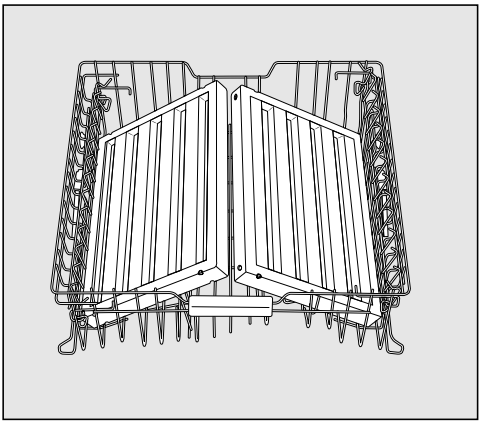

Upper basket

- Set the upper basket into the top or middle position if you load filters in the lower basket.

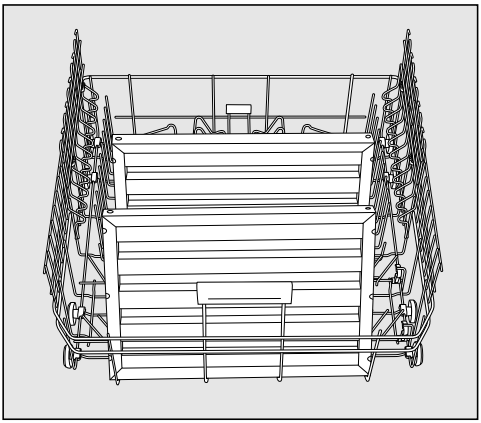

Lower basket

Cutlery tray

- Arrange the cutlery in the cutlery tray as shown.

Loading the 3D MultiFlex Tray

To make unloading easier, utensils should be grouped in zones, one for knives, one for forks, one for spoons, etc.

Spoon heads should be placed in contact with at least one of the serrated retainers on the base of the cutlery tray to ensure that water runs off them freely.

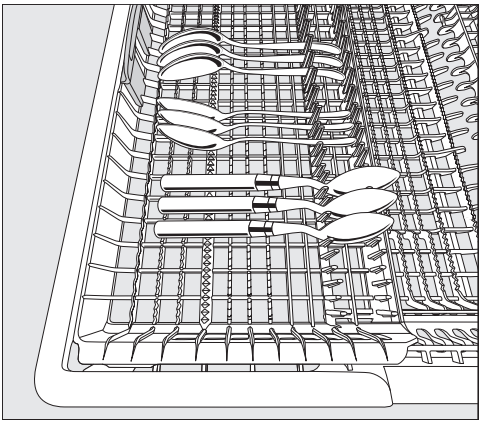

- If spoon handles do not fit between the holders, then lay them the other way round.

You can push the left insert to the middle in order to accommodate tall items and long stemmed glasses in the upper basket (see “Loading the silicone elements of the FlexCare cup rack” under “Upper basket”).

You can put large and long utensils in the recessed middle part of the tray.

Arrange tall items (such as cake server) so that they do not block the upper spray arm.

You can adjust the height of the right-hand insert to create more space in the right-hand part of the tray for larger utensil items or smaller dishware.

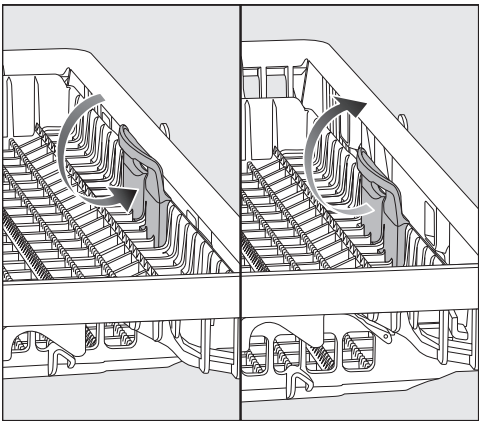

- Pull the insert inward by the yellow handle and click it into place in one of the two positions.

Active ingredients

⚠ Damage caused by using unsuitable detergents.
Detergents that are not suitable for domestic dishwashers can cause damage to the dishwasher or to the wash items.
Only use detergents formulated for domestic dishwashers.

Modern detergents contain various active ingredients, the most important of which are:

- Water softening complexing agents to prevent limescale.
- Alkalis to aid removal of dried-on soiling.
- Enzymes to break down starch and loosen protein.
- Oxygen-based bleaching agents to remove coloured stains (e.g., tea, coffee, tomato sauce).

Most dishwasher detergents are mildly alkaline and contain enzymes and oxygen-based bleaching agents.

There are different types of detergent:

- Powder and liquid gel detergents. These detergents allow you to adjust the amount dispensed according to the load size and the level of soiling.
- Tab detergents. These are suitable for most levels of soiling.

As well as the usual detergents, combination products are also available. These contain rinse aid and water softener (reactivation salt).
Only use these combination detergents for the water hardness levels recommended by the manufacturer on the packaging.
The cleaning and drying performance of these combination detergents can vary greatly.
Please make sure that if you stop using combination detergents, you refill the reactivation salt and rinse aid. Turn the refill reminders back on if required.

For optimum cleaning and drying results, use dishwasher detergent and add salt and rinse aid separately.

⚠ Risk of chemical burns from detergent.

Dishwasher detergents can cause burning on the skin and in the eyes, nose, mouth, and throat.

Avoid contact with detergents.

Do not inhale or ingest powder detergent. Do not swallow dishwasher detergents. Seek medical attention immediately if detergent has been swallowed or inhaled.

Keep children away from detergents. Detergent residues could still be present in the dishwasher. Keep children away from the dishwasher when the door is open. Do not fill the detergent dispenser until just before starting the program.

Detergent dispensing

There are 2 ways of dispensing the detergent.

During automatic dispensing, the AutoDos function will automatically dispense the required amount of detergent for each program sequence once a PowerDisk has been inserted (see “Automatic dispensing / AutoDos” under “Detergent”).

If you do not wish to use AutoDos, you can manually dispense the detergent into the detergent compartment. This means you will have to fill the required amount of detergent into the detergent compartment before each program (see “Manual detergent dispensing” under “Detergent”).

Automatic dispensing / AutoDos

Before you can use AutoDos, you must insert a PowerDisk containing powder detergent into the PowerDisk compartment.

One PowerDisk contains enough detergent for approx. 20 cycles, depending on the chosen program.

PowerDisks are available to order directly from Miele’s online store, Miele Customer Service, or from your Miele dealer.

⚠ Risk of chemical burns from residual detergent.

Detergents have a caustic effect. This can cause health problems and damage to surfaces. If the AutoDos is used incorrectly, residual detergent may drip onto the floor area in front of the dishwasher.

Always remove residual detergent from in front of the dishwasher immediately.

Activating AutoDos

- Turn the dishwasher on using the ⏻ sensor control.
- Before you first use AutoDos, remove the tab from the AutoDos lid and dispose of the tab appropriately.
- Insert a PowerDisk (see “Inserting a PowerDisk” under “Automatic dispensing / AutoDos”).

The *AutoDos* function will be activated automatically.

This setting applies to all programs and you can change it in a program’s Extra options menu.

> If no program is started for 48 hours, the PowerDisk will automatically be rotated so that the detergent does not clump together. If this happens, the message Powder refresh in progress will be shown in the display when the dishwasher is turned on. No detergent will be dispensed.

Inserting a PowerDisk

Only replace the PowerDisk when the message PowerDisk empty. Deactivate AutoDos with OK. appears.

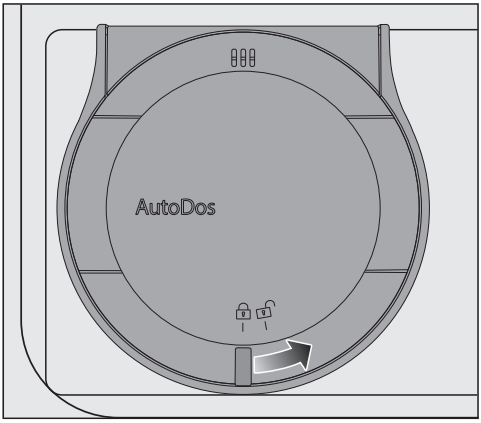

- Turn the AutoDos lid to 🔓 and open it.

The message AutoDos lid open will appear on the display.

- Remove the empty PowerDisk.

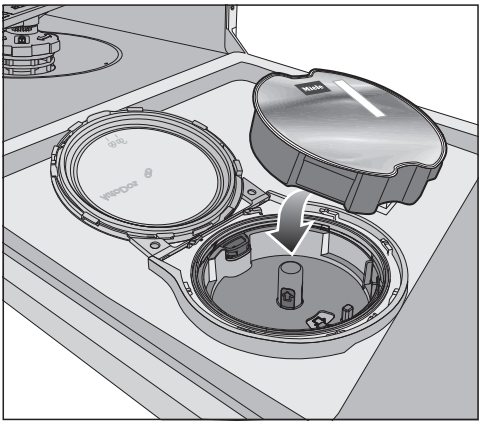

- Insert the new PowerDisk and press it evenly downward until it sits flush.

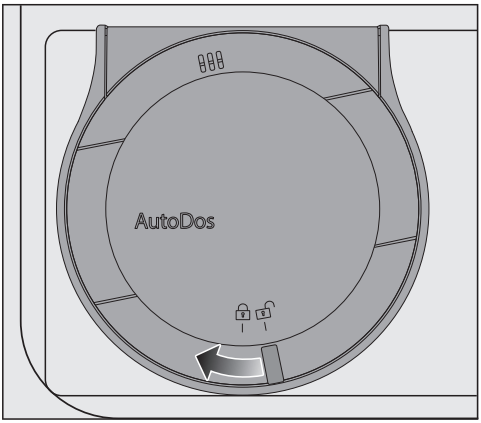

- Close the AutoDos lid and turn it until the lid handle is directly below the 🔒 symbol.

This activates the *AutoDos* function.

If the PowerDisk is not in the correct starting position, it will be rotated automatically.
Wait until this procedure ends before you start a program.

The AutoDos lid must be closed to prevent damage to the AutoDos.
Always close the AutoDos lid before you close the dishwasher door. Otherwise, the AutoDos may become damaged.

Programs cannot start when the AutoDos lid is open.

The detergent powder must be dry so that it does not clump together.
Do not fill the AutoDos with any type of fluid.

It is not permitted to refill the PowerDisk with powder detergent. This will invalidate the warranty.

In order to ensure that the AutoDos function works at its best, check it each time you replace the PowerDisk and clean it if needed (see “Cleaning the AutoDos” under “Cleaning and care”).

Manual detergent dispensing

Detergent must be manually dispensed if you have deactivated AutoDos in a program’s Extra options menu.

Detergent dispensing

The detergent compartment holds a maximum of 50 ml.

There are marks in the detergent compartment to aid with dispensing: 20, 30, max. When the door is opened to a horizontal position, they show the approximate fill level in ml and the maximum fill height.

- Follow the detergent dosage recommended by the manufacturer on the packaging.
- Unless directed otherwise, use one detergent tab or add 20 to 30 ml of detergent to the detergent compartment, depending on the level of soiling of the dishware.

If you use less than the recommended amount of detergent, the dishware may not get properly clean.

Some tabs may not dissolve completely when the program *QuickIntenseWash* is used.

Adding detergent

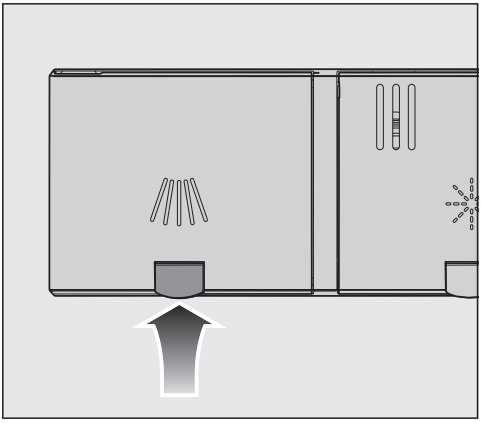

- Press the yellow button on the lid of the detergent compartment.

The lid will spring open.
The lid will also open at the end of the program.

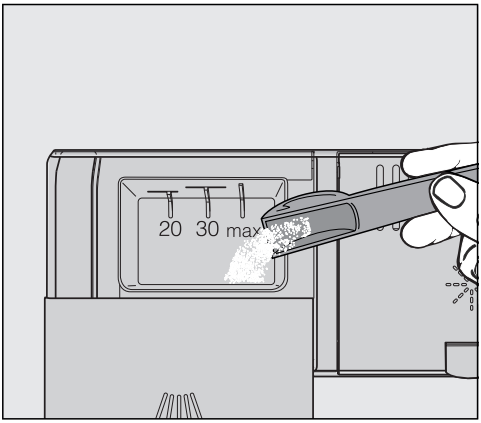

- Add the detergent to the detergent compartment.
- Push the lid shut until you hear it click into place.

The detergent must not cause the detergent compartment lid to get stuck. This can prevent the lid from opening during the program sequence.
Do not overfill the detergent compartment.

- If you wish, deactivate automatic dispensing / AutoDos.
- Ensure that the detergent packaging is properly closed after use. This prevents the detergent from getting damp and clumping together.

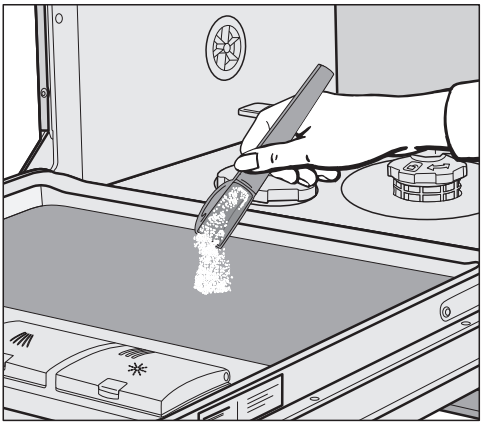

- You can also apply a small amount of detergent to the inner panel of the door in programs that have a pre-rinse stage (see “Program overview”).

Switching on the dishwasher

- Turn on the water supply if it is turned off.
- Open the door.
- Make sure the spray arms can rotate freely.
- Touch the ⏻ sensor button.
  If the dishwasher has been turned off for longer than 1 minute, you will need to hold the ⏻ sensor button for a bit longer (wipe protection).

The Programs menu will appear in the display.

Selecting a program

Choose your program according to the type of load and the degree of soiling.

The different programs and their uses are described in the “Program overview”.

- Select the program you want in the display.

The display will change to the Extra options menu.

You can now select the extra options (see “Extra options”).

To select a different program, touch the *Back* sensor control to return to the Programs menu.

If you want to control the dishwasher remotely using the Miele app, you will first need to activate the “Remote start” option (see “Activate Remote start” under “Options”).

Display of program cycle time

The estimated duration of the selected program appears on the display before the program begins. If the door is opened during the program, the time left until the end of the program is displayed.

The displayed duration may vary for the same program. It is influenced by, for example, the temperature of the incoming water, the reactivation cycle of the water softener, the detergent type, the amount of dishware, and how soiled it is.

When a program is selected for the first time, the display will show the average program cycle time for a cold water connection.

The program cycle times shown under “Program overview” refer to standard test loads and temperatures.

Each time a program is run, the control module calculates the program cycle time required depending on the temperature of the water taken into the dishwasher and the amount of dishware.

Starting a program

- Start the program by closing the door. If necessary, confirm the previously displayed message with *OK*.

The in-operation indicator light comes on to show that a program sequence has been started.

⚠ Risk of scalding due to hot water.

During operation, water in the dishwasher may be very hot.

During operation, only open the door with extreme caution.

End of the program

At the end of the program, the in-operation indicator light will be flashing slowly with the door shut. The buzzer might also be sounding.

The in-operation indicator light will go out 10 minutes after the end of the program if the door is closed.

The program has ended when the display shows the message ⏻ Finished.

In some programs, if the AutoOpen function is activated, the door will automatically open slightly (see “AutoOpen” under “Settings”). This improves the drying process.

The drying fan may continue to run for a few minutes at the end of the program.

If you are not satisfied with the cleaning or drying results, you can activate the Extra clean or Extra dry functions to boost the performance of the programs (see “Extra clean” or “Extra dry” under “Extra options”).

⚠ Risk of damage due to steam.

Steam from the dishwasher could damage the edges of delicate work surfaces when you open the door at the end of the program and the fan is no longer running.

If you have deactivated the automatic door opening function (see “AutoOpen” under “Settings”), but would still like to open the door at the end of the program, then make sure that you open the door fully.

Energy management

To save energy, the dishwasher will turn off automatically 10 minutes after the last time a sensor button is pressed or after the end of a program.

You can turn the dishwasher back on again with the ⏻ sensor button.

If the dishwasher has been turned off for longer than 1 minute, you will need to hold the ⏻ sensor button for a bit longer (wipe protection).

The dishwasher will not turn itself off while a program is running or if there is a fault.

Turning off the dishwasher

- Open the door.
- The dishwasher can be turned off at any time using the ⏻ sensor control.

Turning the dishwasher off during a program stops the program.

- Confirm the query Turn appliance off? with Yes.

You can also do this to stop an ongoing timer.

⚠ Risk of damage from leaking water.

Leaking water can cause damage.

If the dishwasher is not going to be used for a longer period of time, e.g., during vacations, the faucet should be turned off.

Unloading the dishwasher

Dishware tends to break and chip more easily when it is hot. Allow dishware to cool until it is comfortable enough to handle before unloading them.

The dishware will cool much faster if you open the door when the program has ended.

- First unload the lower basket, then the upper basket, and finally the 3D MultiFlex Tray (if present).
  This will prevent water drops from the upper basket and 3D MultiFlex Tray from falling onto the dishware in the lower basket.

Interrupting a program

A program will be interrupted as soon as the door is opened.
If the door is closed again, the program will continue from the point it was at before the door was opened.

> ⚠ Risk of scalding due to hot water.
> During operation, water in the dishwasher may be very hot.
> During operation, only open the door with extreme caution.

Cancelling or changing a program

> If a program is cancelled, important program stages may be missed.
> A program should only be cancelled in the first few minutes of the program sequence.

If a program has already started and you wish to cancel it, proceed as follows:

- Open the door.
- Touch the ⮌ (Back) sensor control.
- Confirm the query Cancel the program? with Yes.

The program is cancelled.

If you would like to select another program:

- Touch the ⮌ sensor control.

The display will change back to the Programs menu.

- If you have dispensed detergent manually, check whether the detergent compartment is still closed. If the lid is already open, fill it with detergent again and close the lid.
- Select the program you want, and then start it by shutting the door.

The in-operation indicator light comes on to show that a program sequence has been started.

◷ Timer

The timer ◷ gives you several options for starting a program at a later time. The start or finish time of a program can be delayed. You can also use the EcoStart or SmartStart functions to benefit from cheaper energy rates at night.

During manual detergent dispensing, the detergent will clump together if the detergent compartment is not dry, and this may mean it is not fully rinsed out.

When using the timer function, make sure that the detergent compartment is dry before adding detergent. Wipe dry with a cloth first, if necessary. Do not use any liquid detergents. These can leak out.

⚠ Danger to health due to detergent.

To prevent children coming into contact with dishwasher detergent:

Do not fill the detergent dispenser **until just before starting the program**, i.e., before you activate the timer.

Activating the timer

- Open the door.
- Turn the dishwasher on using the ⏻ sensor button.
- Select the desired program.
- Touch the ◷ Timer sensor button.

The ◷ Timer sensor button lights up.

You can choose between the Start at, Finish at, or EcoStart functions, or SmartStart if applicable.

- Select the function you want.

The last time set for the timer will be displayed and the hour number block will be highlighted.

- Select the time you want for the timer using the ∨∧ sensor buttons and confirm with *OK*.

If, while you are setting the time, you do not apply any settings for several seconds, the display will revert to the previous menu. You will then have to enter your settings again.

After you have activated the timer, all the displays will turn off after a few minutes to save energy.

You can also activate a timer via the Miele app.

Setting “Start at”

With the Start at function, you set the exact time at which you want the program to start.

- Set the hours with the ∨∧ sensor buttons.
- Touch the minute number block.
- Use the ∨∧ sensor buttons to enter the minutes and confirm your entry with *OK*.

The saved start time for the selected program will appear in the display for several minutes.

- Close the door.

When the set time is reached, the program selected will begin automatically.

Setting “Finish at”

Use the Finish at function to set the latest time by which the program selected has to be finished.

- Set the hours with the ∨∧ sensor buttons.
- Touch the minute number block.
- Use the ∨∧ sensor buttons to enter the minutes and confirm your entry with *OK*.

The estimated start time for the selected program will appear in the display for several minutes.

A message will appear in the display if the program cannot be completed by the set finish time because it has too long a cycle time.

- If it appears, confirm the message with *OK*.
- Close the door.

The program will start automatically when the estimated start time is reached.

Setting “EcoStart”

The EcoStart function enables you to benefit from cheaper electricity rates at night. Before you can use this option, you need to set up to 3 electricity rate time zones (see “EcoStart” under “Settings”).
Then set the time by which the selected program has to be finished.
The dishwasher will then start automatically in the most economical rate zone within the time set.

- Set the hours with the ∨∧ sensor buttons.
- Touch the minute number block.
- Use the ∨∧ sensor buttons to enter the minutes and confirm your entry with *OK*.

The estimated start time for the selected program will appear in the display for several minutes.

- Close the door.

Waiting for EcoStart will appear in the display.

The program will start automatically when the estimated start time is reached.

Setting “SmartStart”

The SmartStart function is used for starting your dishwasher automatically at a time when your energy costs are most economical.

To use this function you may need further technical accessories.

If you have activated the SmartStart function in the Settings menu, the *Timer* ◷ menu will no longer show the EcoStart function but will instead show SmartStart (see “Miele@home” under “Settings”).

If your energy provider offers this service, they will send a signal to your dishwasher when energy costs are at their most economical.
This signal will start the dishwasher.

You can set the time by which the program selected has to be finished.
The dishwasher will then calculate the latest possible start time for the program selected and will wait until this start time for the signal from the energy provider.

Set the time by which the selected program has to be finished.

- Set the hours with the ∨∧ sensor buttons.
- Touch the minute number block.
- Use the ∨∧ sensor buttons to enter the minutes and confirm your entry with *OK*.

Waiting for SmartStart will appear in the display.

- Close the door.

The selected program will start automatically as soon as the energy provider has sent the signal or the latest possible calculated start time has been reached.

Changing and deleting the timer

You can change the time set for the timer or delete it in order to start the selected program immediately.

Changing the timer

- Open the door.
- Touch the ⏲ Timer option in the display.

You can use the ∨∧ sensor buttons to change the time for the timer.

Deleting the timer

- Select the 🗑 option and confirm with *OK*.

The time for the timer is reset to the current time of day.
The display switches back to the Extra options menu for the selected program. Once you have closed the door, the program starts within 1 minute.

The timer stops if you switch off the dishwasher while a timer is running or touch the ⮌ sensor button and confirm the query with Yes.

You can also change the time set for the timer or delete it using the Miele app.

Activating MobileStart

You can start your dishwasher remotely using the Miele app. To do this, you first need to install the app on your mobile device, connect the dishwasher to your Wi-Fi network (see “Miele@home” under “Settings”), and, if applicable, activate the MobileStart option (see “Remote control” under “Settings”).

- Open the door.
- Turn the dishwasher on using the ⏻ sensor control.
- Touch the sensor control.

The sensor control lights up.

- Turn the dishwasher off using the ⏻ sensor control.
- Close the door.

The dishwasher can now be operated remotely using the Miele app.

The MobileStart option will remain activated until you deactivate it again using the sensor control. The option will also remain active if you switch the dishwasher off and back on again in the meantime.

Even if the MobileStart option is not active, you can display the status of your dishwasher and apply settings using the Miele app.

If you start a program by closing the dishwasher door, the MobileStart option will automatically be activated for the duration of the program.

Displaying the operating hours

You can display how many hours the dishwasher has been in operation so far.

- Open the door.
- Turn the dishwasher on using the ⏻ sensor control.
- If necessary, confirm the messages and refill reminders with *OK*.
- Use the *Back* sensor control to switch from the Programs menu to the main menu.
- Select the Information menu.

The dishwasher’s operating hours are displayed.

- Touch the *Back* sensor control to return to the main menu.

Program overview

Program	When to use	Program sequence				
		Pre-rinse	Main wash °F/°C	Interim rinse	Final rinse °F/°C	Drying
Normal[1]	Program for regular use to completely wash a full load of normally soiled dishware with the ability to adjust energy and water consumption based on the soil load of the dishes.	✓	122–167/50–75	✓	133–149/56–65	✓
Pots and pans	For heavily soiled dishware and normally soiled pots, pans, and cutlery with dried-on residue; use 20% more detergent than recommended.	✓	167/75	✓	131–158/55–70	✓
China & Crystal	For temperature-sensitive glasses and dishware with light soiling. Use 50% of the recommended detergent. GlassCare program for temperature-sensitive glasses and dishware with light soiling.	✓	113/45	✓	131–158/55–70	✓
Quick Intense Wash	“Quick program” for standard dishware soiling that has not dried on.	-	131/55	✓	140/60	✓
SaniWash	To sanitize dishes, e.g., baby bottles, chopping boards, and preparation dishware.	-	167/75	✓	167/75	✓

[1] This program is used for energy labelling purposes.

Consumption[2]			Duration[2]	
Energy		Water		
Cold water 50°F / 10°C kWh	Hot water 120°F / 49°C kWh	Gallons/litres	Cold water 50°F / 10°C h:min	Hot water 120°F / 49°C h:min
0.97	1.05	3.2/12.1	3:01	2:43
1.40	1.55	3.4/13.0	3:29	3:11
0.85	1.05	3.3/12.5	2:51	2:25
1.00	1.10	2.8/10.5	1:18	0:58
1.45	1.55	2.4/9.0	2:43	2:27

[2] Values are calculated under standardized testing conditions. In practice there may be variations to these figures due to variable conditions and data recorded by the sensors. Durations shown will reflect your household conditions.
In practice, the selected settings, extra options, or operating conditions may result in different values (see “Displaying the cycle times” under “Operation”).
The energy consumption with a hot water supply includes the energy used to heat the water.

Program overview

Program	When to use	Program sequence				
		Pre-rinse	Main wash °F/°C	Interim rinse	Final rinse °F/°C	Drying
Final rinse and hold	For performing a final rinse of dishware when a complete program is not needed.	✓	-	-	-	-
Extra quiet	Extra quiet program for mixed dishware with standard, slightly dried-on residue with a longer cycle time.	-	122/50	✓	131–158/55–70	✓
Economy	Water and energy saving program for normally soiled dishware with residue that has not dried on, with a long activation time, and a low temperature.	-	122/50	✓	108/42	✓
Energy Saver	The water intake temperature must be 115°F (45°C) for slightly to normally soiled dishware.	✓✓	✓	✓	✓	✓
Filter	Wash program for cleaning Miele ventilation hood filters.	✓	167/75	✓	131–158/55–70	✓

Consumption[2]			Duration[2]	
Energy		Water		
Cold water 50°F / 10°C kWh	Hot water 120°F / 49°C kWh	Gallons/litres	Cold water 50°F / 10°C h:min	Hot water 120°F / 49°C h:min
0.01	0.20	1.1/4.0	0:21	0:21
0.95	1.15	2.4/9.0	4:16	3:58
0.60	0.80	2.1/8.0	3:28	3:18
-	0.05	7.1/27.0	-	2:47
1.55	1.70	3.3/12.5	3:51	3:35

[2] Values are calculated under standardized testing conditions. In practice there may be variations to these figures due to variable conditions and data recorded by the sensors. Durations shown will reflect your household conditions.
In practice, the selected settings, extra options, or operating conditions may result in different values (see “Displaying the cycle times” under “Operation”).
The energy consumption with a hot water supply includes the energy used to heat the water.

Program overview

Program	When to use	Program sequence				
		Pre-rinse	Main wash °F/°C	Interim rinse	Final rinse °F/°C	Drying
Clean Machine	Special cleaning program to remove grease deposits from the dishwasher.	-	167/75	✓✓	158/70	✓
Sensor Wash	Program for dried-on residue and non-sensitive dishware. Temperature, water quantity, cycle time, and energy consumption are automatically adjusted to suit the degree of soiling of the dishware.	As required	113–131/45–55	✓	131–158/55–70	✓
Tall items	For especially large, temperature-resistant load items such as very large pots/pans. Remove the upper basket.	✓	149/65	✓	131–158/55–70	✓
Glasses – No rinse aid	To wash glasses without detergent and rinse aid; rinse cycle with warm water.	-	113/45	✓	131/55	-
Rinse out salt	Program for rinsing the wash cabinet after filling the salt reservoir.	✓	-	-	-	-

Consumption[2]			Duration[2]	
Energy		Water		
Cold water 50°F / 10°C kWh	Hot water 120°F / 49°C kWh	Gallons/litres	Cold water 50°F / 10°C h:min	Hot water 120°F / 49°C h:min
1.75	2.00	5.0/19.0	2:37	2:07
0.85–1.15[3, 4]	0.90–1.30[3, 4]	1.7–3.2/6.5–12.0[3, 4]	2:28–3:45	2:16–3:27
1.10	1.25	3.6/13.5	2:49	2:27
0.85	0.95	2.4/9.0	1:33	1:18
0.01	0.40	2.2/8.5	0:13	0:13

[2] Values are calculated under standardized testing conditions. In practice there may be variations to these figures due to variable conditions and data recorded by the sensors. Durations shown will reflect your household conditions.
In practice, the selected settings, extra options, or operating conditions may result in different values (see “Displaying the cycle times” under “Operation”).
The energy consumption with a hot water supply includes the energy used to heat the water.

[3] Minimum value: partial load with light soiling

[4] Maximum value: full load with heavy soiling

Selecting extra options

You can use extra options to adjust the programs.

To do this, you can select or deselect extra options in the Extra options menu of a selected program before running it.

- Open the door.
- Turn the dishwasher on using the ⏻ sensor control.
- Select a different program as required.

All available extra options will be shown in the display.

Not all extra options can be selected in every program or used in combination. Extra options that are not available are greyed out and cannot be selected.

- Select the extra options you want.

The selected extra options are marked in orange.

- If you want to cancel the selection of an extra option, touch the sensor control for the option again.
- When you have made all the settings you want, close the door to start the program.

The selected extra options will remain active for that particular program until the settings are changed (except for the *ECO* program).

Express

You can reduce the cycle time using the *Express* extra option.

The time by which the program cycle time is shortened varies according to the selected program.

In order to achieve optimum wash results, the temperature, and therefore the energy consumption, will slightly increase with this option.

The *Express* extra option may take precedence over other selected options.

AutoDos

The *AutoDos* extra option can be used to switch automatic dispensing on or off (see “Automatic dispensing” under “Detergent”).

The setting applies to all programs.

BottleClean

You can select the *BottleClean* extra option to increase the cleaning performance of the programs for tall, narrow hollow containers, e.g., beer glasses, drinking bottles. Load items that have been placed in the glass and bottle holders in the lower basket are cleaned particularly thoroughly (see “FlexCare Glass & Bottle” under “Loading the dishwasher”).

When this extra option is activated, the cycle time is extended and the cleaning temperature may increase. This will increase the water consumption and energy consumption.

IntenseZone

You can select the *IntenseZone* extra option to increase the cleaning performance of the programs in the lower basket.

When this extra option is activated, the cycle time is extended and the cleaning temperature increases. This will increase the water consumption and energy consumption.

Extra clean

You can select this extra option to increase the cleaning performance of the programs.

When this extra option is activated, the cycle time is extended and the cleaning temperature increases. This will increase the water consumption and energy consumption.

Extra dry

You can select this extra option in order to increase the program drying performance.

When this extra option is activated, the cycle time is extended and the final rinse temperature increases. This will increase energy consumption.

Check the condition of your dishwasher regularly (approx. every 4–6 months). This way, faults and problems can be avoided.

⚠ Damage caused by unsuitable cleaning agents.

All surfaces are susceptible to scratching. Contact with unsuitable cleaning agents can alter or discolour all surfaces.

Only use cleaning agents formulated for use on the relevant surfaces.

Cleaning the wash cabinet

The wash cabinet is largely self-cleaning, provided that the correct amount of detergent is always used.

The frequent use of low-temperature wash programs (< 50°C) increases the risk of germs and odours inside the wash cabinet. Run the *Pots & Pans* program once per month to clean the wash cabinet and prevent odours from developing.

However, if residues such as limescale or grease have been deposited, use the Clean Machine program to clean the dishwasher (see "Additional programs ⧉" under "Program overview") with machine cleaner (see "Clean Machine" under "Optional accessories"). Follow the instructions on the product packaging.

Miele cleaning and care products are available to order from Miele Customer Service or from Miele's online store.

- Clean the filters in the wash cabinet regularly.

Hygiene cycle

If you mainly use low-temperature programs, there is a risk of germs and unpleasant odours building up in the wash cabinet. If you repeatedly use low-temperature programs, you should regularly run a high-temperature program. This is to prevent the build-up of residues and odours.

You can activate or deactivate a Hygiene info message (see "Hygiene cycle" under "Settings").
If you deactivate this message, run the *Pots & Pans* program once per month to clean the wash cabinet and prevent odours from developing.

Cleaning the door and the door seal

The door seal and the sides of the dishwasher door are not accessed and cleaned by the spray arm jets. As a result, mould can develop here.

- Wipe the door seals regularly with a damp cloth to remove food deposits.
- Wipe off any food or drink residues which may have dripped onto the sides of the dishwasher door before closing it.

Cleaning the control field

- The control field should **only** be wiped with a clean, damp cloth.

Cleaning the reflector panel

The reflector panel for the in-operation indicator light is situated on the cover sheeting underneath the countertop.

- The reflector panel should only be cleaned with a damp cloth if necessary.

Cleaning the appliance front

⚠ Damage due to soiling.
Soiling that is left too long might become impossible to remove and could cause the external surfaces to alter or discolour.
Remove any soiling immediately.

- Clean the appliance front with a clean sponge and a solution of hot water and dishwashing liquid. After cleaning, wipe the appliance front dry using a soft cloth.
  A clean, damp microfibre cloth without cleaning product can also be used for cleaning.

To avoid damage to the outer surface, do not use:

- cleaning agents containing soda, ammonia, acid, or chloride
- cleaning agents containing lime scale remover
- abrasive cleaning agents, such as scouring powder, scouring liquid, or pumice stones
- cleaning agents containing solvents
- stainless steel cleaners
- dishwasher detergents
- oven cleaners
- glass cleaning agents
- hard, abrasive brushes, cloths, or sponges, e.g., pot scourers, brushes, or sponges which have been previously used with abrasive cleaning agents
- eraser sponges
- sharp metal scrapers
- steel wool
- steam cleaners

Cleaning the AutoDos

If the Clean AutoDos message is displayed, check that the AutoDos is clean, and clean it if necessary, e.g., powder residues. This helps keep the AutoDos working properly.

In order to ensure that the AutoDos function works at its best, check it each time you replace the PowerDisk and clean it if needed.

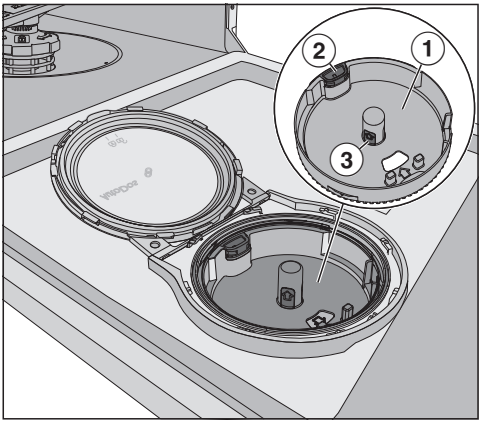

① PowerDisk holder

② yellow pull tab for unlocking the PowerDisk holder

③ yellow tabs on the PowerDisk holder

- Turn the AutoDos lid to 🔓 and open it.
- Remove the PowerDisk if appropriate.

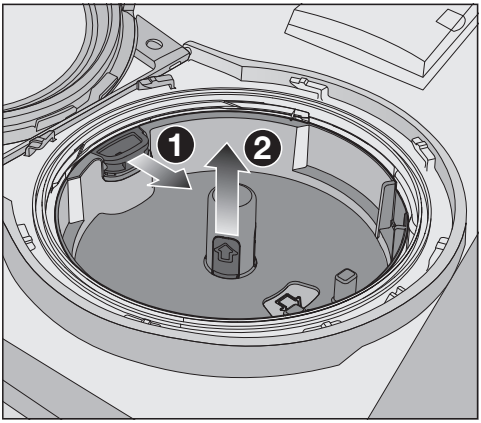

- Unlock the PowerDisk holder by pulling the yellow pull tab in the direction of the arrow ❶ and simultaneously pull the PowerDisk holder upward ❷ using the yellow tabs.
- Clean the AutoDos housing and the PowerDisk holder with a damp cloth.
- Dry all parts well so that the detergent powder does not clump together.

It is very important that no moisture stays inside the AutoDos system during cleaning.

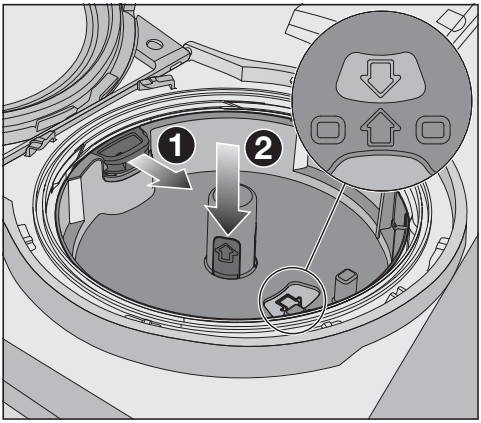

- Pull the yellow pull tab in the direction of the arrow ❶ and reinsert the PowerDisk holder ❷ at the same time. To do this, the arrows in the PowerDisk holder and in the viewing window must point towards each other. The holder must lie flat.

The AutoDos lid must close tightly so that the detergent powder does not get wet and clump together.
Make sure that all seals are clean and clean them if necessary.

- Insert a filled PowerDisk and press it evenly downward until it sits flush.
- Close the AutoDos lid and turn it until the lid handle is directly below the 🔒 symbol (see “Inserting a PowerDisk” under “Detergent”).

Regularly check the lower spray arm for any blockages to ensure that the detergent outlet of the AutoDos can be fully flushed out (see “Cleaning the spray arms” under “Cleaning and care”).

Cleaning the spray arms

Particles of food can get stuck in the spray arm jets and bearings. The spray arms should therefore be inspected regularly (approx. every 2–4 months).

Never run a wash program without using the spray arms.

⚠ Damage due to soiling entering the circulation system.
Without filters, soiling can enter the circulation system and cause a blockage.
Do not run a wash program without the lower spray arm or without the filters.
When cleaning the filters and spray arms, make sure that coarse soiling cannot get into the circulation system.

- Turn the dishwasher off.

Removing the cutlery tray (if present)

In order to be able to remove the upper spray arm, you first have to remove the cutlery tray (if present).

- Pull out the cutlery tray.

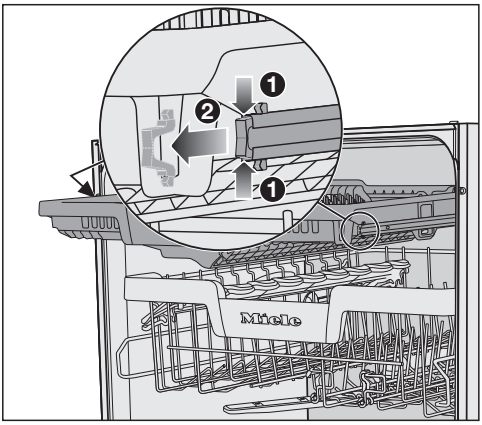

- Press the rail safety clips on both sides of the cutlery tray together ❶ and remove the safety clips ❷ at the same time.
- Take out the cutlery tray completely.

Removing the upper spray arm

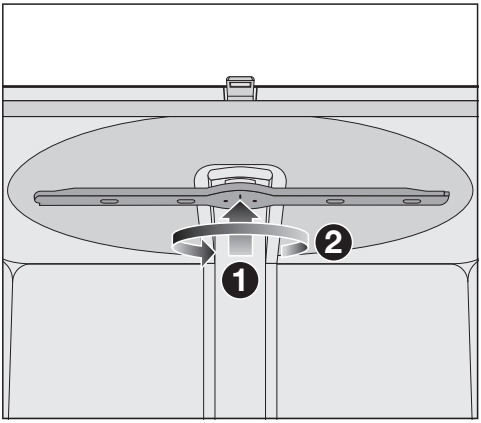

- Push the upper spray arm upward ❶ to engage the inner ratchet. Then unscrew the spray arm by rotating the screw thread counterclockwise ❷ (view from below).

Removing the middle spray arm

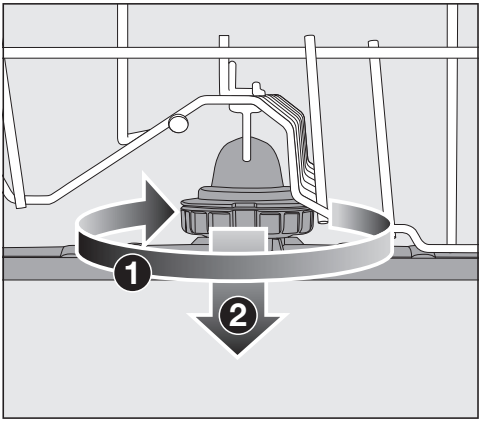

- Rotate the screw thread of the middle spray arm clockwise ❶ (view from above) and remove the spray arm ❷.

Removing the lower spray arm

- Remove the lower basket.

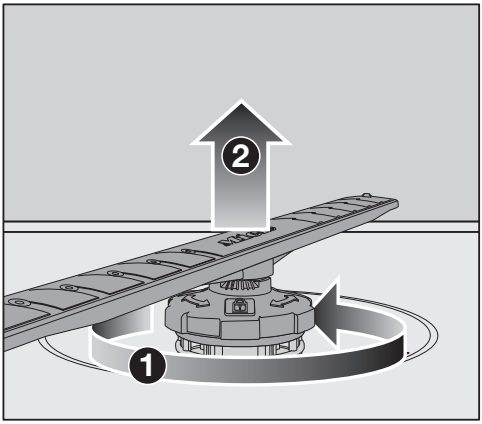

- Rotate the screw thread of the lower spray arm counterclockwise ❶ (view from above) and pull the spray arm upward to remove ❷.

Cleaning the spray arms

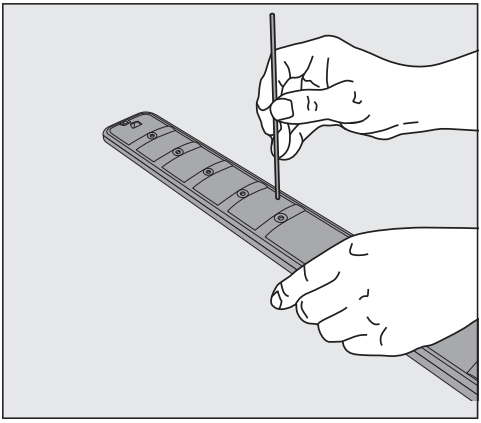

- Use a pointed object to push food particles that are stuck in the spray arm jets into the spray arm.
- Rinse the spray arm thoroughly under running water.

Inserting the upper spray arm

- Refit the upper spray arm and tighten it by hand.

Inserting the middle spray arm

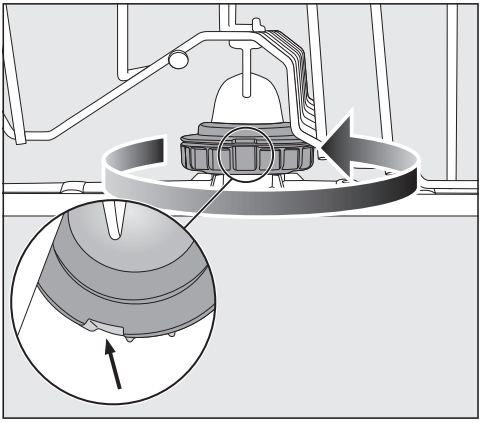

- Replace the middle spray arm and turn the screw thread counterclockwise (view from above) until it engages. Make sure that the recesses in the lock line up.

Inserting the lower spray arm

- Refit the lower spray arm and ensure that the filter combination lies flat in the base of the wash cabinet.

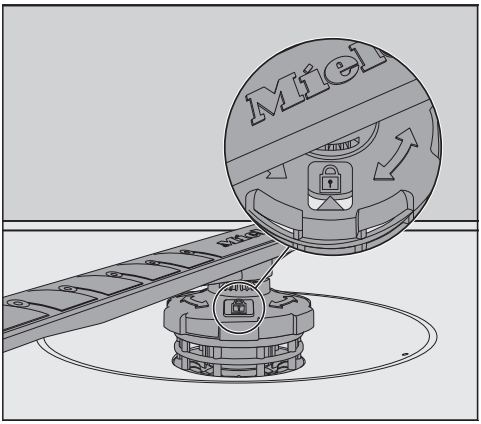

- Rotate the screw thread of the lower spray arm clockwise (view from above) until the arrow in the viewing window points to the lock symbol 🔒.
- Make sure the spray arms can rotate freely.

⚠ Damage due to soiling entering the circulation system.
The lower spray arm is used to secure the filter combination. Without filters, coarse soiling can enter the circulation system and cause a blockage.
Do not run a wash program without the lower spray arm or without the filters.

Inserting the cutlery tray (if present)

- Slide the cutlery tray back onto the rails from the front.
- Replace the safety clips in the rails on both sides of the cutlery tray.

Checking the filters in the wash cabinet

The filter combination in the base of the wash cabinet retains coarse soil from the suds solution. This prevents soiling getting into the circulation system and re-entering the wash cabinet through the spray arms.

⚠ Damage due to soiling entering the circulation system.
Without filters, soiling can enter the circulation system and cause a blockage.
Do not run a wash program without the lower spray arm or without the filters.
When cleaning the filters and spray arms, make sure that coarse soiling cannot get into the circulation system.

Filters can become blocked by soiling which collects over time. The level of soiling and time it takes before the filters need cleaning will vary depending on use.

The message Remove filters and clean them if necessary will appear in the display after every 50 program sequences.

- Check the filter combination.
- Clean it, if necessary.
- Then confirm the message with *OK*.

Cleaning the filters

- Switch the dishwasher off.
- Remove the lower spray arm (see “Cleaning the spray arms” under “Cleaning and care”).
- Before removing the filter combination, remove any coarse soiling to prevent it from entering the circulation system.

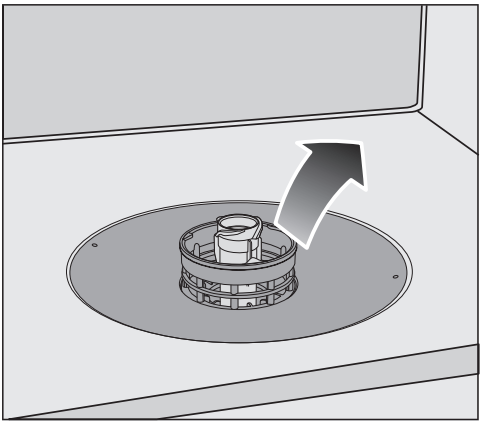

- Remove the filter combination.

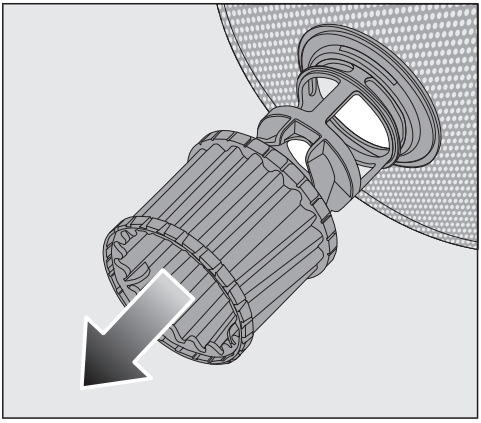

- In order to clean the inside of the filter, pull the microfilter on the plastic ring downwards and away from the filter combination.
- Rinse all the filters under running water.
  If necessary, use a soft cleaning brush to remove soiling.
- Insert the microfilter back into the filter combination.
- Replace the filter combination so that it lies flat in the base of the wash cabinet.
- Refit the lower spray arm to the filter combination using the screw thread.

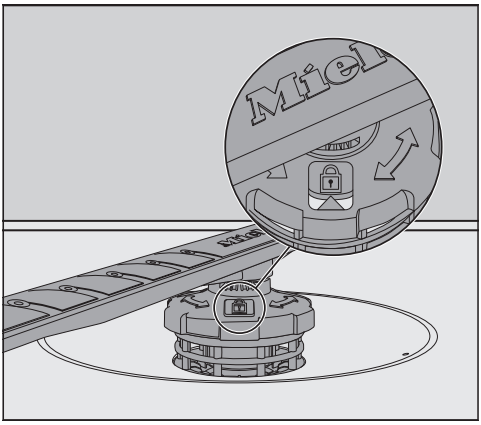

- Rotate the screw thread clockwise until the arrow in the viewing window points to the lock symbol 🔒.

⚠ Damage due to soiling entering the circulation system.
The lower spray arm is used to secure the filter combination. Without filters, coarse soiling can enter the circulation system and cause a blockage.
Do not run a wash program without the lower spray arm or without the filters.

Cleaning the drain pump

If water remains in the wash cabinet after the end of a program, the water has not been pumped away. The drain pump may be blocked by foreign objects. These foreign objects are easy to remove.

- Disconnect the dishwasher from the power supply.
  To do this, turn off the dishwasher and disconnect the plug.
- Take the filter combination out of the wash cabinet (see “Cleaning the filters” under “Cleaning and care”).
- Scoop the water out of the wash cabinet using a small container.

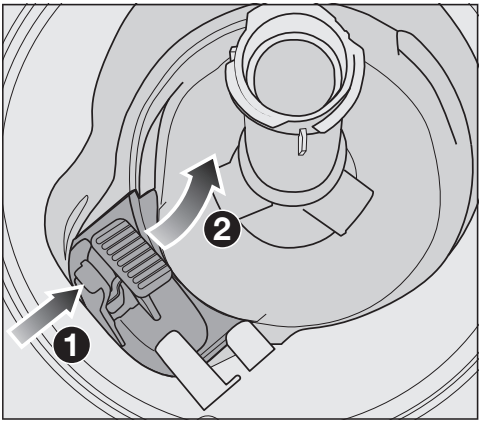

- Press the catch of the drain pump cover inwards ❶.
- Tip the cover inward until it is released ❷.
- Rinse the cover thoroughly under running water and remove all foreign objects.

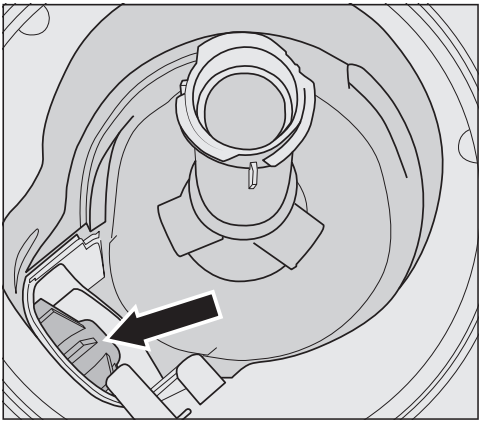

The drain pump (see arrow) is underneath the cover.

> ⚠ Risk of injury from glass splinters.
> It is especially difficult to see glass splinters in the drain pump.
> Take care when cleaning the drain pump.

- Carefully remove all foreign objects from the drain pump. Turn the drain pump impeller by hand to check that there are no more obstructions. You will feel a little resistance when you turn the impeller.
- Refit the cover by placing it down vertically from above.

> Ensure that the catch engages correctly.

> ⚠ Damage caused by incorrect cleaning.
> The components are delicate and can be damaged during cleaning.
> Take care when cleaning the drain pump.

Many malfunctions and faults can be easily remedied. You can save time and money in many cases, as you do not need to contact customer service.

More information to help you rectify faults yourself can be found at www.miele.ca/en/support/customer-assistance.

This section only lists errors that you can remedy yourself. All other errors are shown in ⚠ Fault F.

Technical problems

Problem	Possible cause and solution
The dishwasher will not start.	The door is not closed properly. ■ Raise the door upward until the catch engages.
	The dishwasher is not plugged in. ■ Insert the plug.
	The circuit breaker has tripped. ■ Reset the circuit breaker (see data plate for the minimum fuse rating). ■ If the circuit breaker trips again, contact Miele Service.
	The dishwasher is not switched on. ■ Turn the dishwasher on using the ⏻ sensor button.
The ⏻ sensor control does not respond or only responds once it has been touched several times.	Energy management: The door was opened or closed shortly before the ⏻ sensor control was touched. As a result, the dishwasher was already switched on. The electronics require a few seconds to be ready for operation. ■ Wait a few seconds after opening or closing the door. ■ Then touch the ⏻ sensor control.
The dishwasher stops during a program.	The circuit breaker has tripped. The display is dark and the dishwasher cannot be turned on. ■ Reset the circuit breaker (see data plate for the minimum fuse rating). ■ If the circuit breaker trips again, contact Miele Customer Service.

Problem	Possible cause and solution
After the program has started, the in-operation indicator light is not visible.	The indicator reflector panel was not correctly fitted. ■ Refit the indicator reflector panel correctly (see the installation plan).

Fault messages

Problem	Possible cause and solution
The in-operation indicator light is flashing quickly. **The alarm tone is sounding.** **One of the following fault messages is displayed:**	Before remedying the fault: ■ Switch the dishwasher off.
⚠ Fault F: Technical fault. Switch the appliance off and back on again. Read the Operating Instructions for additional details.	There may be a technical fault. ■ Turn the dishwasher back on after a few seconds. ■ Select the program you want to use. ■ Close the door. If the error message appears again, there is a technical fault. ■ Turn the dishwasher off. ■ Turn off the faucet. ■ Contact Miele Customer Service.
Waterproof fault. Turn the appliance off, close the water supply and contact Miele Service.	The Waterproof system has reacted. ■ Turn the dishwasher off. ■ Turn off the faucet. ■ Contact Miele Customer Service.

Door release

Problem	Possible cause and solution
The in-operation indicator light is flashing quickly. **The alarm tone is sounding.** **The following fault is indicated via the display:**	Before remedying the fault: ■ Switch the dishwasher off.

Problem	Possible cause and solution
⚠ Door opening fault. Switch the appliance off and back on again. Read the Operating Instructions for additional details.	The door does not open automatically. There may be a technical fault. ■ Open the door manually (see “Opening the door” under “Before using for the first time”) and turn the dishwasher back on again. ■ If the same fault message appears again, contact Miele Service.
	The door does not close automatically. The door might be obstructed by an item inside the appliance. ■ If this is the case, remove the item causing an obstruction and turn the dishwasher on again. ■ If the same fault message appears again, contact Miele Service.

Water intake fault

Problem	Possible cause and solution
The in-operation indicator light is flashing quickly. **The alarm tone is sounding.** **One of the following messages appears in the display:**	
Open the water supply	The water supply is turned off. ■ Turn on the water supply fully.

Problem	Possible cause and solution
Insufficient water. Open the water supply all the way. Refer to Operating Instructions if necessary	Before remedying the fault: ■ Switch the dishwasher off.
	There is a problem with the water intake. ■ Turn on the water supply fully and start the program again. ■ Clean the filter in the water intake (see “Cleaning the filter in the water intake” under “Cleaning and care”). ■ The water connection pressure is lower than 50 kPa. Seek professional advice. ■ The on-site connection for the water drainage may be too low and you will need to vent the water drainage (see “Water drainage” under “Installation”).
The following fault message appears during the EnergySaver **program:** Intake temperature too low	The intake water has not reached the required temperature of 45°C (see “Water intake” under “Installation”). ■ Start the program again. ■ If the fault message appears again, select a different program.

Water drainage fault

Problem	Possible cause and solution
The in-operation indicator light is flashing quickly. **The alarm tone is sounding.** **The following message appears on the display:** Water was not pumped away, see Operating Instructions	Before remedying the fault: ■ Switch the dishwasher off.
	Water drainage fault. There might be water in the wash cabinet. ■ Clean the filter combination (see “Cleaning the filters” under “Cleaning and care”). ■ Clean the drain pump (see “Cleaning the drain pump” under “Cleaning and care”). ■ Remove any kink or loop in the drain hose.

Fault in the AutoDos (automatic dispensing)

Problem	Possible cause and solution
The following message appears on the display: PowerDisk inserted?	The *AutoDos* function is activated. There is no PowerDisk or an empty PowerDisk has been inserted. ■ Insert a filled PowerDisk and confirm with Yes (see "Automatic dispensing / AutoDos" under "Detergent"). ■ If you do not wish to use automatic dispensing, deactivate the function using No.
The in-operation indicator light is flashing quickly. **The alarm tone is sounding.** **The program does not start or a program that has already started stops.** **The following message appears on the display:** AutoDos lid open	The AutoDos lid has not been closed properly. ■ Close the AutoDos lid and lock it fully (see "Automatic dispensing / AutoDos" under "Detergent"). ■ If the lid cannot be fully closed, check whether the PowerDisk holder is lying flat (see "Inserting a PowerDisk" under "Detergent"). ■ If the same fault message appears again, contact Miele Service.
The following message appears on the display: PowerDisk empty. Deactivate AutoDos with OK.	The *AutoDos* function is active and the PowerDisk is empty. ■ Replace the PowerDisk (see "Automatic dispensing / AutoDos" under "Detergent"). If you do not wish to use AutoDos, deactivate the function using *OK*.

Problem	Possible cause and solution
The in-operation indicator light is flashing quickly. **At the end of the program, the alarm tone might sound and the display shows the following message:** ⚠ Fault F: Technical fault. Switch the appliance off and back on again. Read the Operating Instructions for additional details.	There is a fault in the AutoDos or the PowerDisk holder has not been inserted. ■ Turn the dishwasher off. ■ If necessary, remove the PowerDisk holder and reinsert it (see “Automatic dispensing / AutoDos” under “Detergent”). ■ Turn the dishwasher back on and restart the program. If the error message appears again, there is a technical fault. However, you can continue using your dishwasher by removing the PowerDisk holder again and reinserting it. After closing the lid, deactivate AutoDos in the Extras option menu of a program and manually dispense the detergent via the detergent compartment (see “Manual detergent dispensing” under “Detergent”). ■ If you wish to use AutoDos again, contact Miele Customer Service.
The in-operation indicator light is flashing quickly. **At the end of the program, the alarm tone might sound and the display shows the following message:** AutoDos maintenance required. Please check AutoDos system. **The dishwasher does not turn off at the end of the program.** **The dishware may not be clean because an insufficient amount of detergent was dispensed.** **The *AutoDos* function is automatically deactivated during the program sequence.**	No PowerDisk or an empty PowerDisk has been inserted or the AutoDos is blocked by residual detergent. Detergent dosage is insufficient. The *AutoDos* function was automatically deactivated. ■ Turn the dishwasher off and back on again. Multiple messages appear in the display. ■ Clean the AutoDos (see “Cleaning the AutoDos” under “Detergent”). ■ Insert a full PowerDisk and close the AutoDos lid. ■ Clean the lower spray arm (see “Cleaning the spray arms” under “Cleaning and care”). ■ Select *OK* to confirm each message. ■ Activate the *AutoDos* function by confirming the message AutoDos available with *OK*. ■ Start the program again.

Spray arm fault

Problem	Possible cause and solution
During the program and at the end of the program, the display shows the following message: Check spray arms **The dishwasher does not turn off at the end of the program.** **The dishware may not be clean because no detergent was dispensed.**	The lower spray arm is blocked or the nozzles of the lower spray arm are clogged. The AutoDos detergent outlet may not be completely flushed out. ■ Turn the dishwasher off and back on again. A message will appear on the display. ■ Perform a rotation check of the lower spray arm and rearrange the wash items if they are blocking the spray arm. ■ Clean the lower spray arm (see “Cleaning the spray arms” under “Cleaning and care”). ■ Confirm the message with *OK*. ■ Start the program again.

General dishwasher problems

Problem	Possible cause and solution
The door will not open when knocked.	The Knock2open function has been permanently disabled. ■ Switch the door opening function on again (see “Knock2open” under “Settings”). If the door still will not open or if there is a power failure, the door can still be opened manually using the door opening aid supplied (see ”Door opening aid” under ”Initial commissioning”).
The indicator lights and display are dark.	The dishwasher has switched off automatically to save energy. ■ Turn the dishwasher back on using the ⏻ sensor button.
Detergent residue is left in the detergent compartment at the end of a program.	The detergent compartment was still damp when detergent was added. ■ Only add the detergent when the detergent compartment is dry.
The detergent compartment lid cannot be closed.	Residual detergent is blocking the catch. ■ Remove the residual detergent.

Problem	Possible cause and solution
At the end of a program there is a film of moisture on the inside of the door and possibly on the interior cabinet walls.	This is part of the normal function of the drying system. The moisture will dissipate after a short while.
Water remains in the wash cabinet at the end of a program.	Before remedying the fault: ■ Switch the dishwasher off.
	The filter combination in the wash cabinet is clogged. ■ Clean the filter combination (see “Cleaning the filters” under “Cleaning and care”).
	The drain pump is blocked. ■ Clean the drain pump (see “Cleaning the drain pump” under “Cleaning and care”).
	The drain hose is kinked. ■ Remove any kinks from the drain hose.
Build-up of odours in the wash cabinet	The frequent use of low-temperature wash programs (< 50°C) increases the risk of germs and odours inside the wash cabinet. ■ Regularly run a high-temperature program. This is to prevent the build-up of residues and odours.

Noises

Problem	Possible cause and solution
There is a knocking noise in the wash cabinet.	A spray arm is hitting the dishware. ■ Carefully open the door and rearrange the dishware that is obstructing the spray arm.
There is a rattling noise in the wash cabinet.	Dishware is moving around in the wash cabinet. ■ Carefully open the door and rearrange the dishware so that it sits securely.
	There is a foreign object (e.g., glass shard) in the drain pump. ■ Remove the foreign object from the drain pump (see “Cleaning the drain pump” under “Cleaning and care”).

Problem	Possible cause and solution
Knocking noise in the water pipes	This may be caused by the on-site installation or the cross-section of the piping. ■ However, this will not affect the functioning of the dishwasher in any way. If in doubt, contact a plumber.

Poor cleaning results

Problem	Possible cause and solution
The dishware is not clean.	The dishware was not loaded correctly. ■ See notes under “Loading the dishwasher”.
	The program was not powerful enough. ■ Select a more powerful program (see “Program overview”). ■ Activate the Extra clean function (see “Extras – Extra clean”). ■ Activate the “Second interim rinse” function (see “Settings – Second interim rinse”).
	Not enough detergent was dispensed. ■ Use more detergent during manual dispensing or change the detergent you are using. ■ Increase the dispensing quantity during automatic dispensing (if available) (see “Settings – AutoDos”).
	Items are blocking the path of the spray arms. ■ Carry out a rotation check and if needed rearrange the items so that the spray arms can rotate freely.
	The filter combination in the wash cabinet is not clean or was incorrectly fitted. This may have caused the spray arm jets to become blocked. ■ Clean and / or fit the filter combination correctly. ■ Clean the spray arm jets if necessary (see “Cleaning the spray arms” under “Cleaning and care”).
There are smears on glassware and cutlery. There is a bluish sheen on the surface of glassware. The film can be wiped off.	The rinse aid dosage is set too high. ■ Reduce the dosage (see “Rinse aid” under “Settings”).

Problem	Possible cause and solution
The dishware is not dry or glasses and cutlery are flecked.	The rinse aid dosage is set too low or the rinse aid reservoir is empty. ■ Replenish the reservoir, increase the dosage, or change the brand of rinse aid (see “Rinse aid” under “Before using for the first time”).
	The dishware was taken out of the wash cabinet too soon. ■ Leave the dishware in for longer (see “Unloading the dishwasher” under “Operation”).
	The duration of the drying phase for the selected program is not sufficient for the dishware (particularly for plastic dishware). ■ Select the Extra Dry function (see “Extra Dry” under “Extra options”).
	You have used combination products that have insufficient drying performance. ■ Switch to another detergent or replenish the rinse aid (see “Rinse aid” under “Before using for the first time”).
Glassware has a brown or blue tinge. The film cannot be wiped off.	Ingredients from the detergent have formed a deposit. ■ Switch to another detergent straight away.
Glassware is dull and discoloured. The film cannot be wiped off.	The glassware is not dishwasher-safe. The surface has altered. ■ No remedy. Purchase glassware which is dishwasher safe.
Tea or lipstick stains have not been completely removed.	The wash temperature of the selected program was too low. ■ Select a program with a higher wash temperature.
	The bleaching effect of the detergent is too low. ■ Switch to another detergent.
White residue is visible on the dishware. Clouding has occurred on glassware and cutlery. The film can be wiped off.	The rinse aid dosage is set too low. ■ Increase the dosage (see “Rinse aid” under “Settings”).
	The salt reservoir is empty.

Problem	Possible cause and solution
	■ Fill the salt reservoir (see “Reactivation salt” under “Before using for the first time”).
	The salt reservoir cap has not been screwed on correctly. ■ Replace it, making sure that it screws back on correctly.
	Unsuitable combination detergents were used. ■ Switch to another detergent. If using detergent tabs or powder detergent, do not choose combination products and ensure you refill the reactivation salt and rinse aid.
	The water softener is programmed to too low a water hardness level. ■ Program the water softener to a higher water hardness level (see “Water hardness” under “Settings”).
	Too much detergent was dispensed. ■ Reduce the dispensing quantity during automatic dispensing (if available) (see “Settings – AutoDos”). ■ Activate the “Second interim rinse” function (see “Settings – Second interim rinse”).
	Not enough combination detergent was dispensed. The water softener performance is not sufficient. ■ Increase the dispensing quantity during automatic dispensing (if available) (see “Settings – AutoDos”). ■ Add more reactivation salt.
Plastic parts are discoloured.	Natural dyes, e.g., from carrots, tomatoes, or ketchup may be the cause. The amount of detergent used or its bleaching effect was not sufficient to deal with natural dyes. ■ Use more detergent (see “Detergent”). Parts that are already discoloured will not revert to their original colour.

Problem	Possible cause and solution
There are rust stains on cutlery.	The affected items are not corrosion resistant. ■ No remedy. Purchase cutlery which is dishwasher-safe.
	A program was not run after reactivation salt was added. Traces of salt have got into the normal wash cycle. ■ Immediately after filling the salt reservoir and each time you remove the salt reservoir cap, run the Rinse salt program without load items in the dishwasher to dissolve and remove any traces of salt from the wash cabinet.
	The salt reservoir cap has not been screwed on correctly. ■ Replace it, making sure that it screws back on correctly.

Information to help you rectify malfunctions yourself and about Miele spare parts can be found at www.miele.com/service.

Contact in the event of a fault

In the event of a fault which you cannot remedy yourself, please contact your Miele dealer or Miele Customer Service.

Contact information for Miele Customer Service can be found at the end of this document.

Please quote the model identifier and serial number of your appliance (SN) when contacting Miele Customer Service. This information can be found on the data plate.

The data plate is located on the right side of the door.

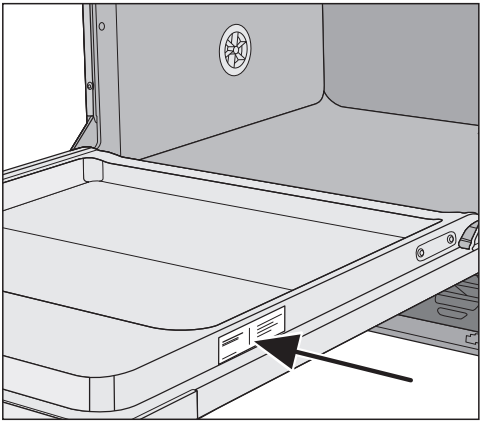

Warranty

The warranty period is 2 years.

For further information, please refer to the warranty conditions in the booklet provided.

Water inlet

⚠ Risk to health due to wash water.
Water in the dishwasher must not be used as drinking water.
Do not drink any water from the dishwasher.

⚠ Risk to health and risk of damage due to contaminated incoming water.
The quality of the incoming water must correspond to the drinking water specification of the country in which the dishwasher is being operated.
Connect the dishwasher to a drinking water supply.

The dishwasher may be connected to cold or hot water (up to max. 140°F / 60°C) supplies.
We recommend connecting to a cold water connection to reduce energy consumption.
If energy-saving water heating sources, such as solar energy circulation systems, are used, we recommend connecting to the hot water connection. This saves both time and electrical energy costs. Hot water is used in all programs.

The EnergySaver program (if available) requires a hot water connection of between a minimum of 113°F / 45°C and a maximum of 140°F / 60°C (intake temperature).
The higher the water intake temperature, the better the cleaning and drying results.

The water inlet hose is approximately 5 ft (1.5 m) long. The slightly transparent corrugated hose around the water inlet hose provides protection during transportation and can be removed if necessary. However, the corrugated hose can also be left in place around the water inlet hose to provide additional protection.

The dishwasher is supplied with a 3/8" supply line and requires an on-site water connection with 3/8" male compression fitting and an accessible shut-off valve. If this type of faucet is not available, only a qualified installer may connect the dishwasher to the domestic water supply.

A backflow preventer is not required. The appliance meets the requirements of the applicable DIN standards.

The water connection pressure needs to be between 50 and 1,000 kPa (7 and 145 psi). If the water connection pressure is too high, a pressure reducing valve must be fitted.

⚠ Risk of damage from leaking water.
The connection point is subject to water pressure. Water leaking from it can cause damage.
You should therefore open the faucet slowly and check for leaks. Correct the position of the seal and screw thread if appropriate.

⚠ Risk of damage due to excessive pressure.
A brief increase in the water pressure can damage components of the dishwasher.
This dishwasher must only be operated when it is connected to a fully vented plumbing system.

⚠ Risk of damage from leaking water.
The water inlet hose is under water pressure.
The water inlet hose must not be shortened or damaged in any way.

⚠ Risk to health and risk of damage due to damaged power cord or water inlet hose
Damage to the power supply cable or water inlet hose can lead to electric shocks or water damage.
Do not place the dishwasher on the water inlet hose. The water inlet hose must be free of kinks and able to move freely after installation. Do not install the water inlet hose or the power cord next to a heat source, such as a hot water pipe. Do not expose the water inlet hose or the power cord to corrosive substances (such as chloride).

Water drainage

The appliance drainage system has a non-return valve, which prevents dirty water from flowing back into the dishwasher via the drain hose.

The dishwasher is supplied with approx. 5 ft (1.5 m) of flexible drain hose with an internal diameter of 7/8" (22 mm).

The hose can be extended using a connection piece to attach a further length of hose. The drainage length must not be longer than 13 ft (4 m) and the delivery head must not exceed 3 ft (1 m).

If the hose is to be directly connected to the drainage outlet on site, use the supplied hose clip (see the installation diagram).

The hose can be directed to the left or the right of the appliance.

The on-site connector for the drain hose can be used for various hose diameters. If the connector extends too far into the drain hose, it must be shortened. Otherwise, the drain hose can become clogged.

The drain hose must not be shortened.

Lay the drain hose so that it does not kink and is not being subjected to pressure or tugged.

⚠ Risk of damage from leaking water.
Leaking water can cause damage.
After servicing the appliance, ensure that the drain does not leak.

Venting the water drainage

If the on-site drainage connection is situated lower than the guide path for the lower basket rollers in the open door, the drainage system must be vented. Otherwise, a siphoning effect during a program can cause the wash cabinet to empty itself of water.

- Open the dishwasher door fully.

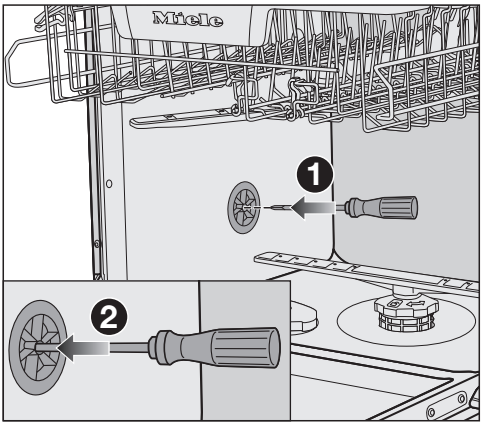

- Remove the lower basket.
- Insert a screwdriver into the middle opening of the vent valve in the left wash cabinet wall ❶.
- Press the screwdriver further into the opening and push it through the membrane ❷ behind.

The vent opening for the water drain is now open.

⚠ Installation, repairs and other work by unqualified persons could be dangerous.

Check that the voltage, frequency and fuse rating shown on the data plate match the household mains supply.

The power outlet must be accessible after installation. Do not use an extension cord to connect the dishwasher to the mains. Danger of overheating! See data plate on the right side of the door.

A damaged power cord must only be replaced with a genuine Miele cord by a Miele service technician.

Grounding instructions

THIS APPLIANCE MUST BE GROUNDED.

In the event of a malfunction or breakdown, grounding will reduce the risk of electric shock by providing a path of least resistance for the electrical current. This appliance is equipped with a cord having an equipment grounding conductor and a grounding plug. The plug must be plugged into an appropriate outlet that is installed and grounded in accordance with all local codes and ordinances.

⚠ Improper connection of the equipment grounding conductor can result in electric shock.

Do not modify the plug provided with the appliance; if it will not fit the outlet, have a proper outlet installed by a qualified electrician.

If there is any question concerning the proper electrical connection or grounding of this appliance to the powersupply, please consult a licensed electrician or call Miele's Customer Service Department:
USA: 1-888-99-MIELE(64353)
CDN: 1-800-565-6435

Specifications

The dishwasher comes equipped with a 4 ft (1.2 m) power cord (measured from the rear of the dishwasher) with a molded plug for connection to 120 V, 60 Hz, 15 A grounded receptacle.

Hardwired electrical connection
It is possible to hardwire this appliance to an existing power cable.

⚠ CAUTION: Before servicing, disconnect the power supply by either removing the fuse, shutting off the power main or manually "tripping" the circuit breaker.
Installation work and repairs should only be performed by a qualified technician in accordance with all applicable codes and standards. Repairs and service by unqualified persons could be dangerous and the manufacturer cannot be held responsible.
Before connecting the appliance to the power supply, make sure that the voltage and frequency listed on the data plate correspond with the household electrical supply. This data must correspond to prevent machine damage. Consult an electrician if in doubt.

GROUNDING INSTRUCTIONS

THIS APPLIANCE MUST BE GROUNDED.

This appliance must be connected to a grounded metal, permanent wiring system, or an equipment-grounding conductor must be run with the circuit conductors and connected to the equipment-grounding terminal or lead on the appliance.

⚠ Prior to making a hardwire connection to the terminal, remove the powercord. Otherwise there will be a risk of electric shock from the attached plug.

An existing flexible supply cord or cable shall have a minimum thickness of AWG 14.
120 V, 60 Hz, 15 A fuse rating
Black wire (live): connect to L
White wire (neutral): connect to N
Green wire (ground): connect to ⏚

⚠ After attaching the permanent power supply cord, check that all wires are correctly and securely placed in the connector and the strain relief is tightened.

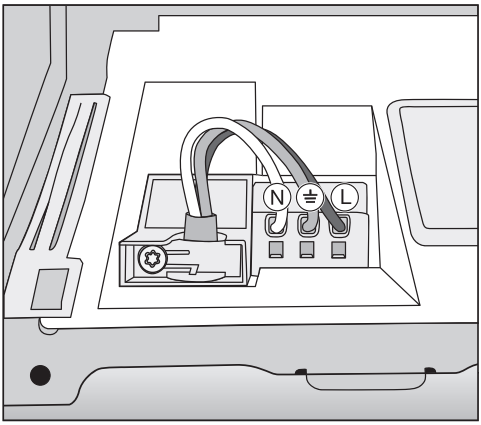

Prerequisites for sound emission testing

Load the dishwasher with **16 standard place settings** and use the *Normal* program.

Setup for sound emission testing

The dishwasher must be set up according to the following specifications.

- Install the dishwasher into an analyzing unit.
- Secure the front panel.

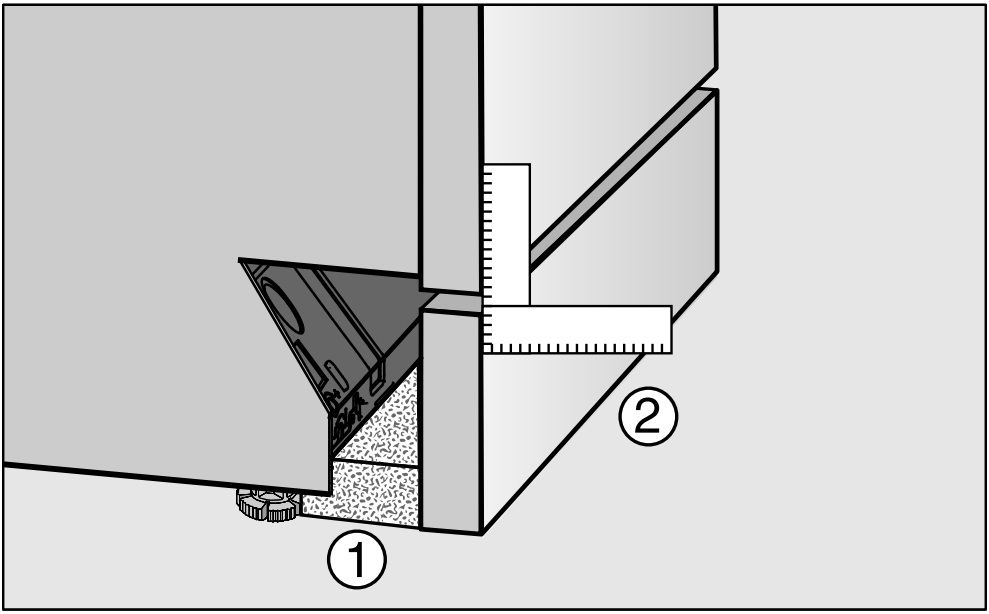

- Push the provided fleece strip (depending on model) under the base until it the fleece strip is flush with the appliance feet ❶.
- Push the base into place in such a way that it is flush with the door panel ❷.

Sound emission testing

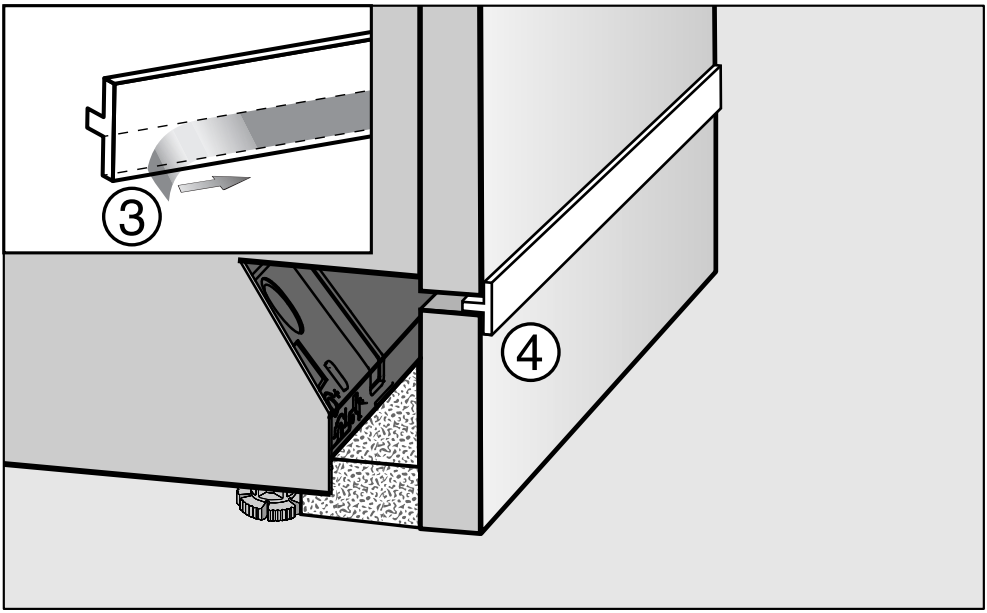

- Remove the protective film from the provided insulating strip (depending on model) ❸.
- Stick the insulating strip onto the front top edge of the base board ❹.

Please have the model and serial number of your appliance available when contacting Customer Service.

Canada

Importer
Miele Limited

Headquarters and Miele Centre
161 Four Valley Drive
Vaughan, ON L4K 4V8
www.miele.ca

Customer Care Centre
Phone: 1-800-565-6435
contact@miele-support.ca

Germany
Manufacturer
Miele & Cie. KG
Carl-Miele-Straße 29
33332 Gütersloh

Miele

G 7986

en-CA

M.-Nr. 12 779 881 / 01 / 002