Mobile unit E 900-6 for surgical instruments

Miele

⚠ Please read the Warning and Safety instructions in the operating instructions for your G 7827/7828 or PG 8527/8528 Washer-disinfector carefully. You should only process instruments/medical devices in this insert if they have been declared as suitable for machine processing by the manufacturer. Please also observe the manufacturer's care instructions. The programme selected must be suitable for the materials from which the items to be processed are made. Where possible the programme should include thermal disinfection. The final rinse should, if possible, always be carried out with fully demineralised water.
If using automatic mobile unit recognition, please make sure that the coding is correctly set.

Items supplied:

Mobile unit E 900-6 with six levels, of which two are removable, H 553, W 636, D 790 mm fitted with a magnetic strip for automatic mobile unit recognition and spray arm magnets for spray arm monitoring (PG 8527/8528 only).

Optional accessories

- E 142 DIN mesh tray
- E 473/1 insert for small instruments
- E 476, holders for instruments ∅ 4 - 8 mm
- E 479, holders for instruments ∅ up to 4 mm
- E 492 insert for kidney dishes
- E 518, hose connector

Areas of application:

The E 900-6 mobile unit can be used for processing surgical instruments in up to 18 DIN mesh trays. There are 4 additional connections on each of 4 levels for hollow items.

Loading dimensions* [H x W x D in mm]	E 900-6	without level 2	without level 2 and level 4
Level 1	71 x 555 x 780	162 x 555 x 780	162 x 555 x 780
Level 2	71 x 565 x 780	–	–
Level 3	71 x 555 x 780	71 x 555 x 780	162 x 555 x 780
Level 4	71 x 565 x 780	71 x 565 x 780	–
Level 5	71 x 580 x 780	71 x 580 x 780	71 x 580 x 780
Level 6	71 x 595 x 780	71 x 595 x 780	71 x 595 x 780

* Levels are numbered from the bottom upwards

Before loading the machine and before starting a programme, please check that:

- the spray arms rotate freely,
- the spray arm jets are clean and free of any blockages,
- the removable levels are locked
- the mobile unit is correctly aligned with the water intake of the washer-disinfector.

For validation purposes please make sure that you follow the loading instructions given on the template.

To ensure a suitable standardised spray pressure for all connections, all screw connectors must be fitted with jets, adapters, sleeves or blanking screws. Damaged jets, adapters or sleeves etc. must not be used.

Empty jets, etc. do not have to be replaced with blanking screws.

E 900-6

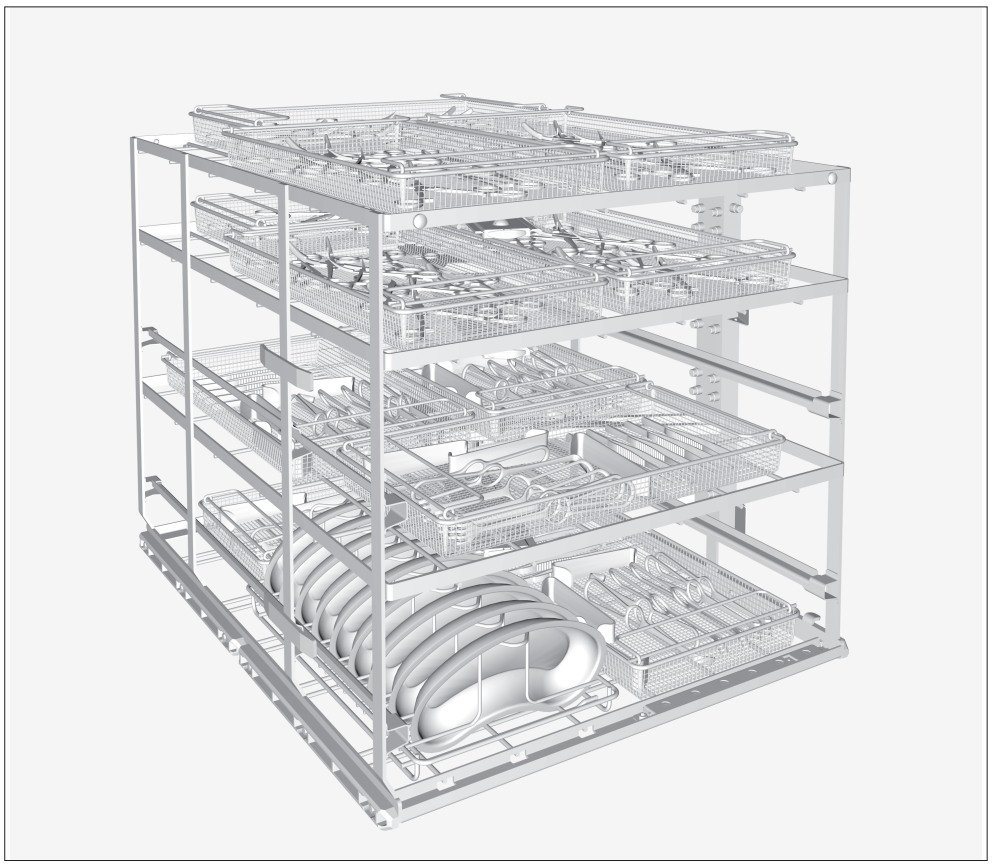

E 900-6 without level 2 and level 4.

Removable levels

The second and fourth levels are removable to give more loading height capacity for levels 1 and 3 if needed.

To remove a level

- Lift the level and pull it out towards you.

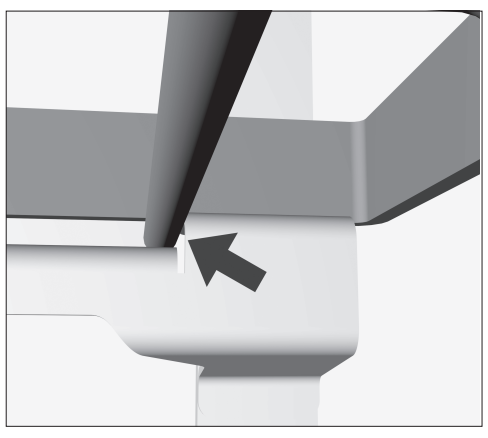

To insert a level

- Place the level onto the runners and push it in.

Engage the bars on the underside of the level behind the lugs on the runners on either side of the mobile unit.

Make sure the level clicks into position correctly.

- Check that the level is securely locked into the runners.

Miele Company Ltd., Fairacres, Marcham Road, Abingdon, Oxon, OX14 1TW, Tel 0330 160 6600,
Internet: http://www.miele.co.uk / CE 0297 Alteration rights reserved / Publication date 2015-11-01

M.-Nr. 10 332 160 / 01 en

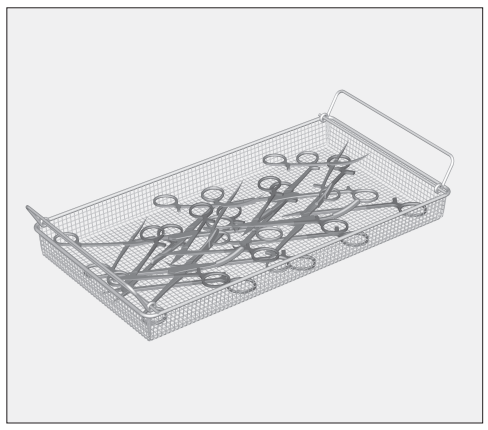

- Containers e.g. beakers and kidney dishes should be placed in the mobile unit with the open side facing downwards, ensuring that all surfaces can be accessed easily and that cleaning solution can flow freely off them. They must also be secure so that they cannot be flipped over by the force of water during processing.

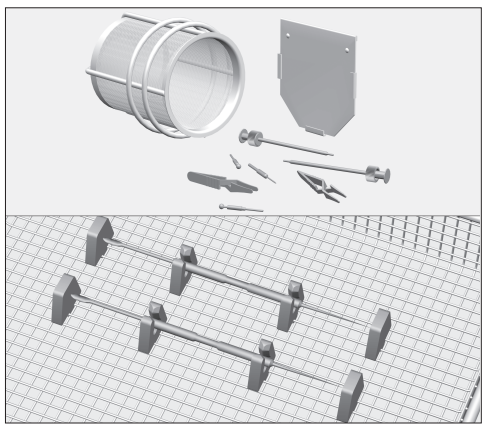

- To prevent the risk of light instruments such as bulldog clips and other small items moving about during processing, closable inserts (e.g. E 473) and silicone holders (e.g. E 476) can be used to keep them secure.

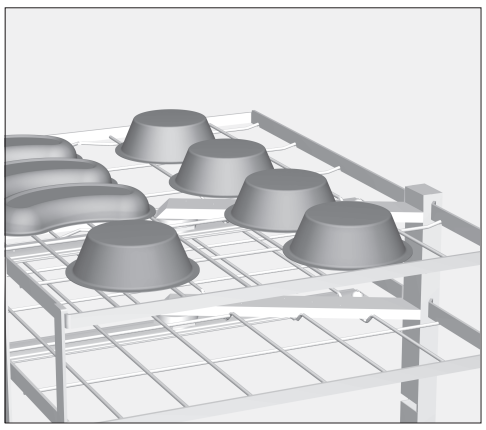

- Hinged instruments must be opened up before being placed in the mesh trays to minimise the risk of surfaces not being accessed during processing.

If hollow containers are placed such that cleaning solution can collect in recesses etc., they will not get properly clean and rinsing results will be impaired.

E 518 hose connectors (optional accessory)

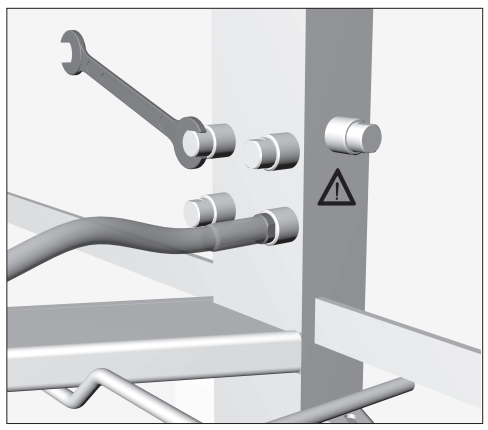

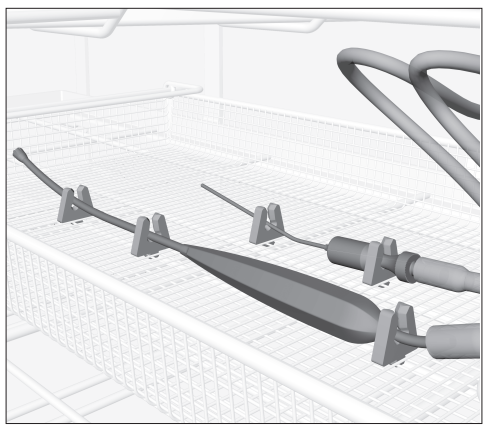

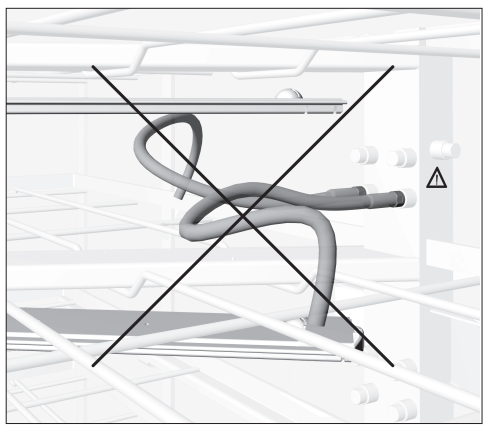

To insert hose connectors

E 518 hose connectors can be fitted if necessary in the water intake of the mobile unit. Hollow instruments, e.g. surgical suction devices, can be connected to them and placed in a mesh tray in the levels of the mobile unit.

To do this:

- Unscrew the blanking screws from the connectors using an SW 9 spanner.
- Screw hoses into the connectors and tighten with the spanner.

⚠ Do not connect any junctions or extensions to the hose connectors as this will severely reduce water pressure.

To connect hollow instruments

⚠ Before connecting hollow instruments, please make sure that all hollow sections are free of blockages. Otherwise the cleaning solution will not be able to access all areas properly.

- Secure hollow instruments in a mesh tray with holders E 476 or E 479.
- Place the mesh tray on a level in the mobile unit and connect the hollow instruments to a hose connector.
- After successful processing, remove the hollow instruments from the hose connectors.

⚠ Any hollow instruments that have become disconnected from the hose connectors during processing must be reprocessed.

⚠ Any hose connectors not in use must be fitted with E 362 blanking screws.

Water pressure can cause the unattached ends of the hose connectors to spin around which can result in the spray arms becoming blocked.

Test point for cleaning pressure measurement

⚠ Cleaning pressure for performance checks and validation according to DIN EN ISO 15883 can be measured using this test point.

- To measure cleaning pressure, replace the sealing screw with a Luer-Lock-Adapter,e.g. E 447.

⚠ Ensure that no instruments, rinsing lines, etc. are connected to the test point.