Miele

Operating and Installation Instructions
Oven

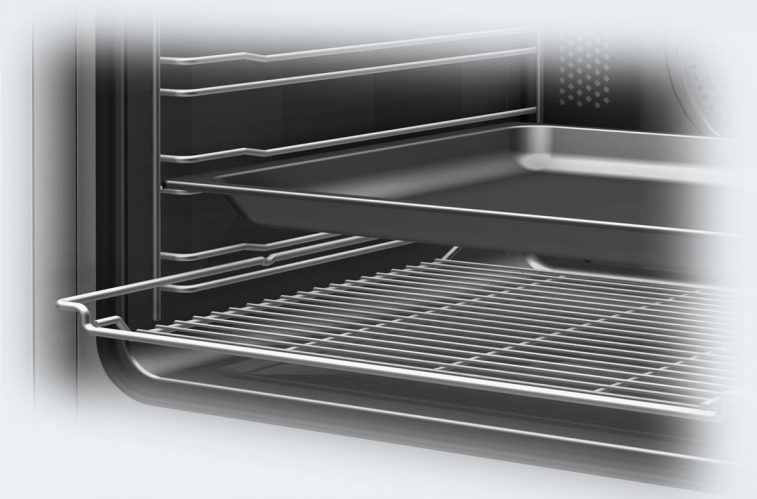

To prevent accidents and damage to the range, you **must** read all instructions supplied before installing or using the appliance.

en-US, CA

M.-Nr. 11 900 011

Contents

IMPORTANT SAFETY INSTRUCTIONS **6**

Overview **15**

Control panel **16**
On/Off button 17
Proximity sensor 17
Sensor buttons 18
Touch display 19
Symbols 20

Using the appliance **21**
Selecting a menu option 21
Scrolling 21
Exiting a menu 21
Changing a value or setting 21
Changing a setting in a list 21
Entering numbers with the roller 21
Entering numbers using the numerical keypad 21
Changing the setting with a segment bar 21
Entering letters 22
Displaying the context menu 22
Moving entries 22
Displaying the pull-down menu 22
Displaying Help 22
Activating MobileStart 22

Features **23**
Data plate 23
Scope of delivery 23
Standard and optional accessories 23
Safety features 27
PerfectClean treated surfaces 27
Self-Clean-ready accessories 27

Initial commissioning **28**
Miele@home 28
Basic settings 29
Heating up the oven for the first time and rinsing the steam injection system 30

Settings **32**
Settings overview 32
Opening the “Settings” menu 35
Language 35
Time 35
Date 35
Lighting 36
Start screen 36
Display 36
Volume 36
Units 37
Booster 37
Rapid cooling 37
Keep warm 38
Recommended temps. 38
Self Clean 38
Cooling fan run-on 39
Proximity sensor (MotionReact) 39
Safety 40
Furniture front recognition 40
Miele@home 40
Remote Control 41
Activating MobileStart 41
SuperVision 41
Remote Update 42
Electrical version 43
Calibrate temperature 43
Software version 43
Legal information 43
Showroom Program 43
Factory default 43
Operating Hours (total) 43

Alarm + Timer **44**
Using the Alarm function 44
Using the Timer function 45

Main and submenus **46**

Energy-saving tips **48**

Contents

Operation **50**
Changing values and settings for a cooking program 50
Changing the temperature and core temperature 50
Setting additional durations 51
Changing set durations 51
Deleting the set cooking durations 51
Canceling a cooking program 51
Preheating the oven compartment 52
Booster 52
Preheat 53
Rapid cooling 53
Keep warm 54
Crisp function 55
Changing the operating mode 55

Moisture Plus **56**
Starting a cooking program with Moisture Plus 57
Evaporate residual moisture 60

Automatic Programs **62**
Categories 62
Using automatic programs 62
Usage notes 62
Search 63

Special Modes **64**
Defrost 64
Dehydrate 65
Warm-up Cookware 66
Proof 66
Keep warm 66
Slow Roasting 67
Sabbath Program 70
Canning 72
Frozen food/ready meals 74

MyMiele **75**

Favorites **76**

Baking **79**
Tips for baking 79
Notes on the operating modes 80

Roasting **81**
Tips for roasting 81
Notes on the operating modes 82
Food Probe 83

Broiling **85**
Tips for broiling 85
Notes on the operating modes 86

AirFry **87**
Accessories 87
Tips for AirFrying 87
Using the AirFry operating mode 87

Cleaning and care of the oven **89**
Unsuitable cleaning agents 89
Removing normal soiling 90
Removing stubborn soiling 90
Cleaning the oven compartment with Self Clean 91
Descale 94
Removing the door 98
Installing the door 99
Removing the side runners with FlexiClip telescopic runners 99
Lowering the browning/broiling element 100

Frequently asked questions **101**

Customer Service **106**
Contact in the event of a fault 106
Appliance warranty and product registration 106

Caring for the environment **107**

Installation **108**
Installation dimensions 108
Installation in a tall or base cabinet (30" niche with trim kit EBA 7xxx) 108
Installation in a tall or base cabinet (24" niche) 109
Side view 110
Connections and ventilation 111
Installing and removing the oven 112
Taking the oven out of the housing unit 113
Electrical connection 114
Electrical connection 115

Declaration of conformity **116**

Copyrights and licenses **117**

Copyrights and licenses for the communication module **118**

IMPORTANT SAFETY INSTRUCTIONS

When using the appliance, please comply with the basic safety requirements, including the following instructions:

Read all instructions before installation and use of the oven to prevent accidents and damage to the appliance.

This appliance complies with current safety requirements. Improper use of the appliance can lead to personal injury and material damage.

Read all instructions before installing or using the oven for the first time. Only use the appliance for its intended purpose.

Keep these operating instructions in a safe place and pass them on to any future user.

Appropriate use

▶ This oven is intended for domestic use and use in other similar environments.

▶ The oven is not intended for outdoor use.

▶ The oven is intended for cooking food – and, in particular, for baking, roasting, broiling, reheating, defrosting, and drying food – in domestic settings only.
All other types of use are not permitted.

▶ Risk of Fire! Do not use this oven to store or dry flammable materials.

▶ This oven can only be used by people with reduced physical, sensory, or mental capabilities or lack of experience and knowledge if they are supervised while using it.
They may only use it unsupervised if they have been shown how to do so in a safe manner. They must be able to understand and recognize the possible dangers caused by incorrect operation.

▶ The oven compartment is equipped with special bulbs to cope with particular conditions (e.g., temperature, moisture, chemical resistance, abrasion resistance, and vibration). These special bulbs must only be used for the purpose for which they are intended. They are not suitable for room lighting.

Safety with children

▶ Activate the system lock to ensure that children cannot switch on the oven inadvertently.

▶ Children should be supervised in the vicinity of the oven. Never allow children to play with the oven.

▶ Burn Hazard - Do not allow children to use the oven. Failure to do so can result in severe burns or serious injury.

▶ Risk of suffocation from packaging material. While playing, children may become entangled in packaging material (such as plastic wrapping) or pull it over their head, presenting the risk of suffocation. Keep packaging material away from children.

▶ Risk of injury caused by hot surfaces. Children's skin is far more sensitive to high temperatures than that of adults. External parts of the oven such as the door glass, control panel, and the vent become quite hot.
Do not let children touch the oven when it is in operation.

▶ Risk of injury caused by hot surfaces. Children's skin is far more sensitive to high temperatures than that of adults. The oven gets much hotter during the Self Clean program than during normal use. Do not let children touch the oven during the Self Clean program.

▶ Risk of injury from the open door. The oven door can support a maximum weight of 33 lbs (15 kg). Children could injure themselves on an open door.
Do not let children sit on the door, lean against it, or swing on it.

Technical safety

▶ This appliance must be installed and connected in compliance with the installation instructions.

▶ Unauthorized installation, maintenance, and repairs can cause considerable danger for the user. Installation, maintenance, and repairs should only be carried out by a qualified specialist or Miele Service.

▶ Maintenance by the user: Never repair or replace any part of the appliance unless the instructions specifically recommend doing so. Service work should only be performed by a qualified technician.

▶ Damage to the oven can compromise your safety. Check the oven for visible signs of damage. Do not use a damaged oven.

▶ Temporary or permanent operation on an autonomous power supply system or a power supply system that is not synchronized with the grid power supply (e.g., island networks, back-up systems) is possible. A prerequisite for operation is that the power supply system complies with national and local codes.
The function and operation of the protective measures provided in the domestic electrical installation and in this Miele product must also be maintained in isolated operation or in operation that is not synchronized with the grid power supply, or these measures must be replaced by equivalent measures in the installation.

▶ The electrical safety of this appliance can only be guaranteed when correctly grounded. It is essential that this basic safety requirement is fulfilled. If in doubt, the electrical installation should be checked by a qualified electrician.

▶ Proper installation: Make sure that your appliance has been installed correctly and that it has been grounded by a qualified technician.

▶ The connection data (voltage and frequency) on the data plate of the oven must match the domestic electrical supply in order to avoid the risk of damage to the oven. Compare this before connecting the appliance to the domestic electrical supply. If in any doubt, consult a qualified electrician.

▶ Power bars and extension cords do not guarantee the required safety of the appliance. Do not use these to connect the oven to the power supply.

▶ For safety reasons, only use the oven when it has been fully installed.

▶ This appliance must not be used in a non-stationary location (e.g., on a ship).

▶ Risk of injury due to electric shock. Any contact with live connections or tampering with the electrical or mechanical components of the oven will endanger your safety and may lead to appliance malfunctions.
Do not open the oven housing under any circumstances.

▶ The manufacturer's warranty may be invalidated if the oven is not repaired by a qualified specialist or by Miele Service.

▶ It is recommended to replace faulty components with original Miele parts. Miele can only guarantee the safety of the appliance when genuine Miele replacement parts are used.

▶ If the oven is delivered without a power cord, a special cord must be installed by a qualified specialist or Miele Service (see “Electrical connection” under “Installation”).

▶ If the power cord is damaged, it must be replaced with a special cord by a qualified specialist or Miele Service (see “Electrical connection” under “Installation”).

▶ During installation, maintenance, and repair work, e.g., if the oven interior lighting is faulty, the oven must be completely disconnected from the power supply (see “Frequently asked questions”). To ensure this:

- The circuit breakers have been switched off, or
- the fuses of the electrical installation have been completely removed, or
- the plug (if present) is removed from the outlet. To do this, pull the plug not the cord.

▶ The oven requires a sufficient supply of cool air for efficient operation. Make sure that the supply of cool air is not hindered in any way (e.g., by installing heat insulation strips in the cabinet niche). In addition, the required supply of cool air must not be excessively heated by other heat sources.

▶ If the oven is built in behind a cabinet door front, do not close the cabinet door while the oven is in use. Heat and moisture can build up behind the cabinet door when closed. This can result in damage to the oven, cabinet niche, and floor. Leave the cabinet door front open until the oven has cooled down completely.

Correct use

▶ Caution: Heating elements may be hot even though they are not glowing. Interior surfaces of an oven become hot enough to cause burns. External parts of the oven such as the door glass, vents, and the control panel can become hot. During and after use, do not touch, or let clothing or other flammable materials come into contact with heating elements or interior surfaces of the oven until they have had sufficient time to cool.

▶ Do not let food sit in the oven for an extended period of time before or after cooking. Doing so can result in food poisoning or sickness.

▶ Loose fitting or hanging garments present a fire hazard. Wear proper apparel while operating the appliance.

▶ Use only dry, heat-resistant potholders. Moist or damp potholders used on hot surfaces may result in steam burns. Do not let potholders come in contact with oil or grease. Do not substitute dish towels or other bulky items for potholders. Do not let potholders touch hot heating elements.

▶ Open the door carefully to allow hot air or steam to escape before placing or removing food.

▶ To prevent burns, always place oven racks at their desired height while the oven is cool. If the rack must be moved while the oven is hot, do not let pot holders touch hot heating elements.

▶ To prevent burns, allow the heating elements to cool before cleaning by hand.

▶ Smother the fire or flames, or use a dry chemical extinguishing agent or foam fire extinguisher.

▶ Never store flammable liquids and materials in, above or under an oven, or near cooking surfaces.

⚠ WARNING
NEVER use this appliance as a space heater to heat or warm the room. Doing so may result in carbon monoxide poisoning and overheating of the oven.

⚠ WARNING
NEVER use this appliance as storage space. Doing so may result in carbon monoxide poisoning and overheating of the oven.

⚠ WARNING
NEVER cover any slots, holes or openings in the oven bottom or cover an entire rack with materials such as aluminum foil. Doing so blocks air flow through the oven and may cause carbon monoxide poisoning. Aluminum foil linings may also trap heat, causing a fire hazard.

▶ Do not obstruct the flow of combustion and ventilation air.

▶ This oven must only be used for cooking food. Corrosive chemicals and vapors as well as fumes, vapors or heat given off by glues, plastics or flammable liquids and materials could be hazardous. Do not use it as a dryer, kiln, dehumidifier, etc.

▶ Do not let metal objects (aluminum foil, pans) come in contact with the heating element.

▶ Make certain that the power cords of small appliances do not come in contact with or get caught in the oven door.

▶ When baking frozen pizzas or pies, place them on the wire rack lined with parchment paper. Do not use the baking tray or the roasting pan for frozen foods with a large surface area. The tray or pan could become warped and difficult to remove from the oven when hot. Frozen foods like french fries, chicken nuggets, etc. can be baked on the baking tray.

▶ Risk of injury caused by hot surfaces. The oven gets hot during operation. You could burn yourself on the heating elements, oven compartment, accessories, or food.
When the oven is hot, use pot holders to insert, remove, or turn food, as well as when adjusting the oven shelves, etc.

▶ To avoid fueling any flames, do not open the oven door if smoke appears inside the appliance. Interrupt the process by turning the appliance off and disconnecting it from the power. Do not open the door until the smoke has dissipated.

▶ Due to the high temperatures radiated, objects left near the oven could catch fire. Do not use the oven to heat up the room.

▶ Oils and fats are a fire hazard if allowed to overheat. Never leave the oven unattended when cooking with oil or fats. Never attempt to put out oil or fat fires with water. Turn the oven off and extinguish the flames by leaving the door closed.

▶ Broiling food for excessively long cooking durations can cause it to dry out with the risk of catching fire. Do not exceed the recommended cooking durations.

▶ Certain foods dry out quickly and may catch fire due to high broiling temperatures.
Never use broiling modes to finish baking par-cooked rolls or bread, or to dry flowers or herbs. Instead, use the Convection or Surround operating mode.

▶ If using alcohol in your recipes, please be aware that high temperatures can cause the alcohol to evaporate. The vapor can catch fire on hot heating elements.

▶ When using residual heat to keep food warm, corrosion from high air humidity and condensation can occur in the oven. This can cause damage to the control panel, countertop, and cabinet carcase. Keep the oven on and select the lowest temperature available for the selected operating mode. The cooling fan will then continue to run automatically.

▶ Food which is stored in the oven compartment or left in it to be kept warm can dry out and the moisture released can lead to corrosion damage in the oven. Always cover food that is left in the oven to keep warm.

▶ A buildup of heat can cause the enamel on the floor of the oven to crack or flake off.
Never line the floor of the oven with aluminum foil or oven liners.
If you wish to place dishware on the floor of the oven during the cooking process, or place dishware on the floor of the oven to heat it up, you can do so, but only with the Convection operating mode, without the Booster function.

▶ The oven floor can become damaged by items being pushed around on it. When placing pots, pans, or dishware on the oven floor, do not push them around.

▶ Risk of injury caused by steam. Pouring a cold liquid onto a hot surface creates steam, which can cause severe scalding. The sudden temperature change can also cause damage to hot surfaces. Never pour cold liquids directly onto hot enameled surfaces.

▶ Risk of injury caused by steam. During cooking processes with moisture injection and during the residual moisture evaporation process, steam is produced, which can lead to severe scalding. Never open the door when bursts of steam are being injected or while the residual water is being evaporated.

▶ It is important that the temperature in the food being cooked is evenly distributed and sufficiently high. You can ensure this by stirring or turning the food.

▶ Plastic containers which are not heat-resistant melt and may ignite at high temperatures and can damage the oven.
Use only plastic containers that are suitable for use in an oven. Follow the manufacturer's instructions.

▶ Canning food and heating it up in closed containers results in an increase in pressure which can cause them to explode. Do not use cans for canning or reheating food.

▶ Risk of injury from the open door. You could bang into the open door or trip over it. Do not leave the door open unnecessarily.

▶ The door can support a maximum load of 33 lbs (15 kg). Do not lean or sit on an open door, or place heavy items on it. Make sure that nothing gets trapped between the door and the oven compartment. This could damage the oven.

The following applies to stainless steel surfaces:

▶ Adhesives will damage the coated stainless steel surface and cause it to lose its dirt-repellent protective coating. Do not use sticky notes, adhesive tape, or other types of adhesive on the stainless steel surface.

▶ Magnets can cause scratches. Do not use the stainless steel surface as a magnetic notice board.

Cleaning and care

▶ Only clean parts listed in these operating and installation instructions.

▶ There is a delicate fiberglass seal around front of the oven compartment provide a seal for the glass on the inside of the oven door. This can be damaged by rubbing or scouring. If possible, refrain from cleaning this.

▶ Do not use oven cleaners. Do not use standard oven cleaners in the oven compartment or on the front of the oven. Never line the oven with oven liners.

▶ Risk of injury due to electric shock. The steam from a steam cleaning appliance could reach live electrical components and cause a short circuit. Never use a steam cleaner for cleaning.

▶ Scratches on the door glass can cause the glass to break. Do not use abrasive cleaners, hard sponges, brushes, or sharp metal tools to clean the door glass.

▶ The side runners can be removed (see “Cleaning and care of the oven – Removing the side runners with FlexiClip telescopic runners”). Reinstall the side runners correctly.

▶ Coarse soiling in the oven compartment can cause thick smoke to develop. Remove coarse soiling from the oven compartment before running the Self Clean program.

▶ Risk of injury caused by hazardous steam. During the Self Clean program, steam can be released.
During the Self Clean program, do not stay in the kitchen for longer periods of time and do not let children and pets enter the kitchen. It is important to ensure that the kitchen is well ventilated during the Self Clean program. Close doors to other rooms to prevent the odor spreading throughout the house.

▶ In warm, moist environments, there is a higher probability of pest infestations. Ensure the oven and the area surrounding it are always kept clean.
Damage caused by pests is not covered by the warranty.

Accessories

▶ It is recommended to use original Miele accessories. Using parts or accessories from other manufacturers may invalidate the warranty, and Miele cannot accept liability.

▶ The Miele Gourmet Casserole Dish HUB 5000/HUB 5001 (if available) must not be inserted on shelf level 1. This will damage the floor of the oven. The lack of clearance will create a buildup of heat, which can cause the enamel to crack or flake off. Never place a Miele Casserole Dish on the upper support of shelf level 1 either as it will not be secured by the non-tip safety notches. As a general rule, use shelf level 2.

▶ Only use the Miele probe supplied with the appliance. If it is faulty, it must be replaced with a new original Miele probe.

▶ The plastic on the probe can melt at very high temperatures. Do not use the probe when using the broiling operating modes. Do not store the probe in the oven compartment when it is not being used.

▶ Accessories that are not suitable for the Self Clean program will be damaged by the high temperatures. Remove all accessories that are not suitable for the Self Clean program from the oven compartment before starting the Self Clean process. This also applies to optional accessories that are not suitable for the Self Clean program (see “Cleaning and care of the oven”).

California Proposition 65

⚠ WARNING
This product can expose you to chemicals mineral oils[1], Nickel (Metallic)[1], Diisononyl phthalate (DINP)[1] and Di-isodecyl phthalate (DIDP)[2], which are known to the State of California to cause [1]cancer and [2]birth defects or [2]other reproductive harm.
For more information go to www.P65Warnings.ca.gov.

KEEP THE OPERATING AND INSTALLATION INSTRUCTIONS IN A SAFE PLACE AND REVIEW THEM PERIODICALLY.

Oven

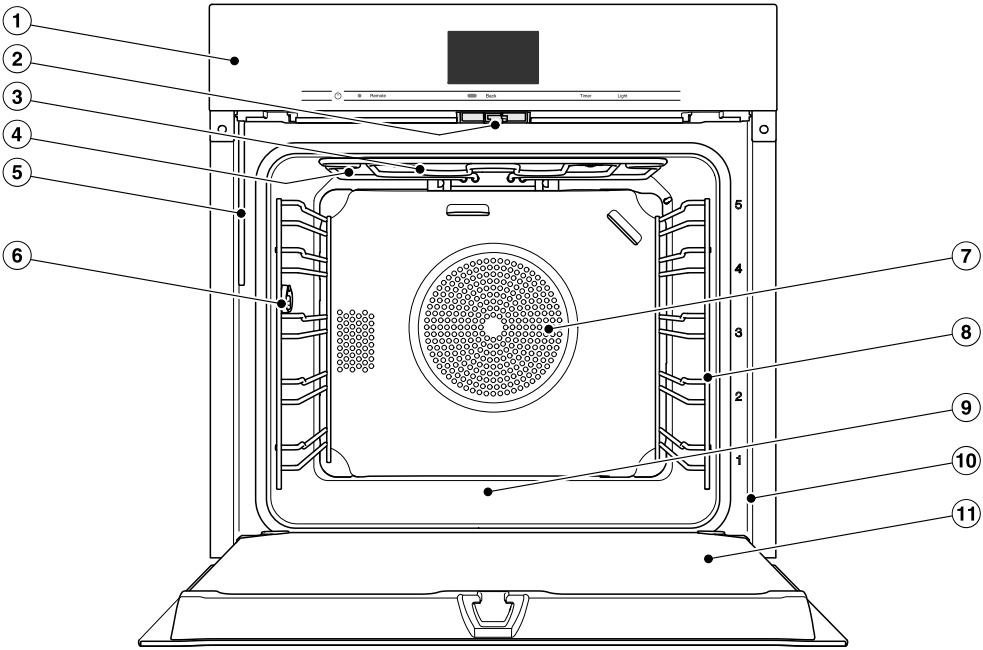

① Controls

② Door lock

③ Browning/Broiling element

④ Steam inlet openings

⑤ Water intake pipe for the steam injection system

⑥ Connection socket for the probe

⑦ Convection fan with heating element

⑧ Side runners with 5 shelf levels

⑨ Oven floor with bottom heat element underneath it

⑩ Front frame with data plate

⑪ Door

Control panel

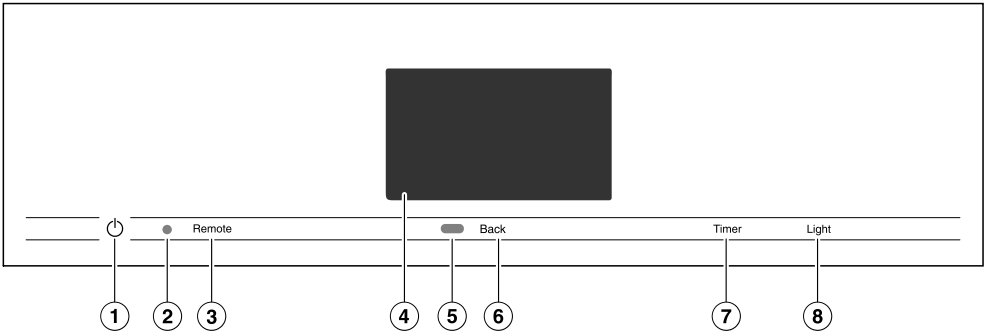

① Recessed ⏻ On/Off button
For turning the oven on and off

② Optical interface
(for Miele Service only)

③ *Remote* sensor button
For controlling the oven via your mobile device

④ Touch display
For displaying information and for operation

⑤ Proximity sensor (MotionReact)
For turning on the oven interior lighting and the display when approached, and to dismiss the audible signal when movement is detected

⑥ *Back* sensor button
To go back a step

⑦ *Timer* sensor button
To activate or deactivate timers or alarms

⑧ *Light* sensor button
For switching the oven interior lighting on and off

On/Off button

The ⏻ On/Off button is recessed and reacts to touch.

Use this button to turn the oven on and off.

Proximity sensor

The proximity sensor detects when you approach the touch display, e.g., with your hand or body.

If you have activated the corresponding settings, you can turn on the oven interior lighting, turn on the oven, or acknowledge the audible signals (see “Settings – MotionReact”).

Sensor buttons

The sensor buttons react to touch. Every tap of a sensor button is confirmed with an audible keypad tone. You can turn this keypad tone off by selecting the Volume | Keypad tone | Off setting.

If you want the sensor buttons to respond even when the oven is turned off, select the Display | QuickTouch | On setting.

Sensor control	Function
Remote	If you want to control the oven from your mobile device, you must have the Miele@home system, turn on the Remote Control setting, and tap this sensor button. The sensor button then lights up and the MobileStart function is available. As long as this sensor button is illuminated, you can control the oven via your mobile device (see “Settings – Miele@home”).
Back	Depending on which menu you are in, this will take you back a level or back to the main menu.
Timer	If a menu appears on the display or if a cooking process is in progress, you can use this sensor button to set a timer (e.g., when boiling eggs) or an alarm (a specific time) at any point (see “Alarm + timer”).
Light	Select this sensor button to turn the oven interior lighting on and off. Depending on the setting selected, the oven interior lighting turns off after 15 seconds or remains constantly turned on or off.

Touch display

The sensitive surface of the touch display can be scratched by pointed or sharp objects, e.g., pens.
Only touch the display with your fingers.
Make sure that water cannot get behind the touch display.

The touch display is split into multiple areas.

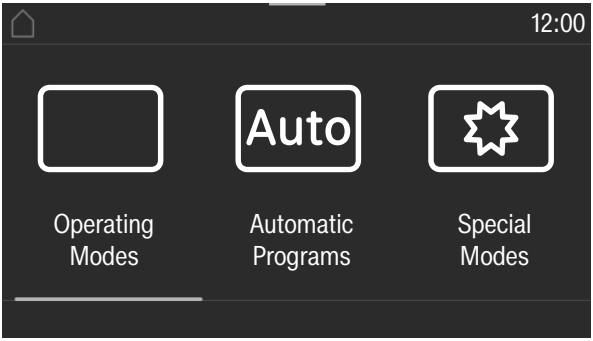

The menu path appears on the left of the **header**. The individual menu options are separated by a vertical line. **... I** indicates that there are more menu options available if the menu path can no longer be displayed because there is not enough space on the display.

If you tap a menu name in the header, the display will switch to that menu. To switch to the start screen, tap ⌂.

The time of day is shown on the right of the header. You can set the time of day by tapping the display.
Additional symbols may also appear, e.g., SuperVision 👁.

At the top of the header, there is an orange line where you can drag down the pull-down menu. This allows you to turn settings on or off during a cooking program.

The current menu and menu options are shown in the **center** of the display. You can scroll to the right or left by swiping your finger across the display to the right or left. Tap a menu option to select it (see “Using the appliance”).

The operation fields that appear in the **footer** vary according to the menu that is selected; e.g., Timer, Save or *OK*.

Symbols

The following symbols may appear on the display:

Symbol	Meaning
i	This symbol indicates that there is additional information and advice about using the appliance. Select *OK* to confirm the information.
...I	This indicates that there are more menu options available, which are not visible because there is not enough space on the display.
	Alarm
	Timer
	Some settings, e.g., display brightness and signal tone volume, are selected using a segment bar.
	The system lock or sensor lock is on (see “Settings – Safety”). The controls are locked.
	Core temperature when using the probe
	Remote control (only appears if you are in the Miele@home system and have selected the Remote Control | On setting)
	SuperVision (only appears if you are in the Miele@home system and have selected the SuperVision | SuperVision display | On setting)

You operate the oven via the touch display by tapping the menu option you want.

Each time you tap a possible option, the relevant characters (word and/or symbol) will light up **orange**.

Fields for confirming an operating step are highlighted in **green** (e.g., *OK*).

Selecting a menu option

- Tap the field or value you want on the display.

Scrolling

You can scroll left or right.

- Swipe across the screen. To do this, place your finger on the touch display and swipe it in the desired direction.

The bar at the bottom shows you where you are in the current menu.

Exiting a menu

- Tap the *Back* sensor button or tap the … I symbol in the menu path.
- Tap the ⌂ symbol to switch to the start screen.

Entries made before this which have not been confirmed with *OK* will not be saved.

Changing a value or setting

Changing a setting in a list

The current setting is highlighted in orange.

- Tap the desired setting.

The setting is now saved. This will take you back to the previous menu.

Entering numbers with the roller

- Swipe the roller up or down until the desired value is displayed in the center.
- Confirm with *OK*.

The changed number is now saved.

Entering numbers using the numerical keypad

- Tap on the value that is in the middle of the numerical keypad.

The numerical keypad appears.

- Tap the required numbers.

As soon as you enter a valid value, *OK* will turn green.
Use the arrow to delete the last entered number.

- Confirm with *OK*.

The changed number is now saved.

Changing the setting with a segment bar

Some settings are represented by a ■■■■□□□ bar made up of segments. If all of the segments are illuminated, the maximum value is selected.

If none of the segments are illuminated or if only one is, the minimum value is selected or the setting is turned off altogether (e.g., audible signals).

- Tap the corresponding segment on the segment bar to change the setting.
- Select On or Off to turn the setting on or off.
- Confirm your selection with *OK*.

The setting is now saved. This will take you back to the previous menu.

Entering letters

Letters are entered using a display keyboard. It is best to select short names.

- Tap the letters or characters you want.

Tip: You can add a line break for longer program names using the ⌡ symbol.

- Tap Save.

The name is now saved.

Displaying the context menu

In some menus you can display a context menu, e.g., to rename Favorites or to move entries under MyMiele.

- For example, tap a Favorite and keep your finger on it until the context menu opens.
- To close the context menu, tap an area of the display located outside of the menu window.

Moving entries

You can change the order of Favorites or entries under MyMiele.

- For example, tap a Favorite and keep your finger on it until the context menu opens.
- Select Move.
- Keep your finger on the highlighted field and drag it to the location you want.

Displaying the pull-down menu

During a cooking program, you can turn settings such as Booster or Preheat and the ᯤ WiFi function on or off.

- Use the orange line under the header to drag the pull-down menu down.
- Select the setting you want to change.
  Active settings are highlighted in orange. Depending on the selected color scheme, inactive settings are highlighted either in black or white (see “Settings – Display”).
- To close the pull-down menu, drag it back up to the top or tap an area of the display located outside of the menu window.

Displaying Help

Context-sensitive help is available for certain functions. In this case, Help appears in the bottom line.

- Tap Help to display information in text and pictures.
- Tap Close to return to the previous menu.

Activating MobileStart

- Select the *Remote* sensor button to activate MobileStart.

The *Remote* sensor button lights up. You can operate your oven remotely with the Miele app.

Directly operating on the oven takes priority over operating it via the remote control function on the app. You can use MobileStart as long as the *Remote* sensor button is lit up.

A list of the models described in these operating and installation instructions can be found on the back page.

Data plate

The data plate located on the front frame of the oven is visible when the door is open.

The data plate states the model number, the serial number, and connection data (voltage, frequency, and maximum rated load).

Have this information available if you need to contact Miele so that any issues can be rectified as quickly as possible.

Scope of delivery

- Operating and installation instructions for using the oven
- Precision probe
- Screws for securing the oven to the cabinet niche
- Descaling tablets and a plastic tube with suction cup for descaling the steam injection system
- Various accessories

Standard and optional accessories

Features will vary depending on model.

The side runners, universal tray, and wire rack (or “rack” for short) are supplied as standard with the oven.

Depending on the model, your oven may also come supplied with some of the accessories listed here.

All accessories and cleaning agents and care products in these instructions are designed to be used with Miele Ovens.

These can be ordered from the Miele web store, Miele Customer Service, or from your Miele dealer.

When ordering, please have the model identifier of your oven ready along with the desired accessories.

Side runners

Side runners for accessories are installed on either side of the oven compartment for shelf levels 5 1.

The shelf level numbers are indicated on the front of the oven frame.

Each level consists of 2 rails, one above the other.

The accessories (e.g., the wire rack) are pushed into the oven between the two rails.

The FlexiClip telescopic runners (if present) are installed on the lower rail.

You can remove the side runners (see “Cleaning and care of the oven – Removing the side runners with FlexiClip telescopic runners”).

Baking tray, universal tray, and wire rack with non-tip safety notches

Baking tray HBB 71:

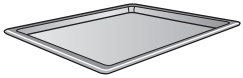

Universal tray HUBB 71:

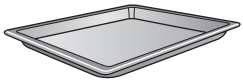

Wire rack HBBR 72:

These accessories are inserted into the oven between the two rails of a side runner.

Always position the wire rack with the loading surface in the lower position.

These accessories have non-tip safety notches installed in the middle of their short sides. These prevent the trays from being pulled out completely from the side runners when you only wish to pull accessories out partially.

If you are using the universal tray with the wire rack on top, insert the tray between the rails of the side runners and the rack will automatically slide in above them.

FlexiClip telescopic runners HFC 72

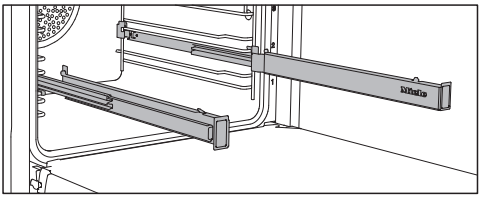

You can use the FlexiClip telescopic runners on shelf levels 1–4.

Push the FlexiClip telescopic runners all the way into the oven before placing accessories on them.

The accessories will then automatically sit securely in between the stoppers at either end of each runner and be prevented from sliding off.

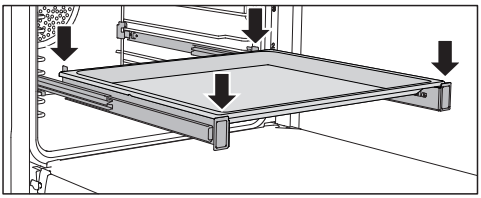

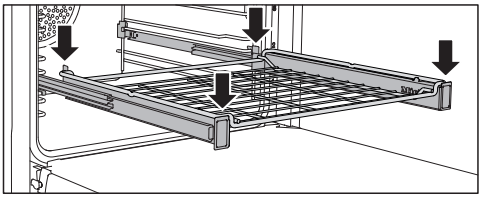

The FlexiClip telescopic runners can support a maximum load of 33 lb (15 kg).

Installing and removing the FlexiClip telescopic runners

⚠ Risk of injury caused by hot surfaces.

The oven gets hot during operation. You could burn yourself on the heating elements, oven compartment, or accessories.

Allow the heating elements, oven compartment, and the accessories to cool down before installing or removing the FlexiClip telescopic runners.

The FlexiClip telescopic runners are installed in between the two rails that make up a shelf level.

The FlexiClip telescopic runner with the Miele logo is installed on the right.

When installing or removing the FlexiClip telescopic runners, do **not** extend them.

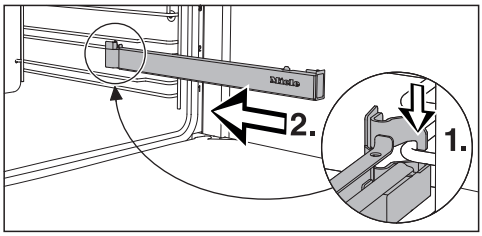

- Hook the FlexiClip telescopic runner onto the lower rail of a shelf level at the front (1.) and push it along the rail into the oven compartment (2.).

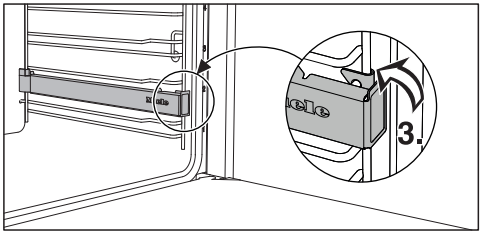

- Then secure the FlexiClip telescopic runner to the lower rail of the shelf level (3.).

If the FlexiClip telescopic runners are difficult to pull out after installing, you may need to pull firmly on them once to release them.

To remove a FlexiClip telescopic runner, proceed as follows:

- Push the FlexiClip telescopic runner in all the way.

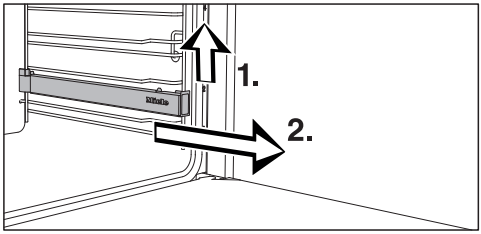

- Remove the FlexiClip telescopic runner by raising it at the front (1.) and then pulling it forwards along the rail of the shelf level and out (2.).

Round baking pans

The **solid round baking pan HBF 27-1** is suitable for cooking pizzas, flat cakes made with yeast, or whisked mixtures, sweet and savory tarts, baked desserts, flat bread, and can also be used for frozen cakes and pizzas.

The **perforated round baking and AirFry pan HBFP 27-1** can be used for the same purposes as the **perforated Gourmet baking and AirFry tray HBBL 71**.

The enameled surface of both bakeware pans has been treated with PerfectClean.

- Insert the wire rack and place the round baking pan on the wire rack.

Gourmet baking and AirFry tray, perforated HBBL 71

The fine perforations of the Gourmet baking and AirFry tray optimize cooking processes:

- Browning on the underside of baked goods made from fresh yeast and quark doughs as well as bread and rolls is improved.
  Roll out the dough on a level surface first and then place it on the perforated Gourmet baking and AirFry tray.
- French fries, croquettes, or similar items can be fried in a low-fat air flow (AirFrying).
- During dehydrating/drying, the air circulation around the food for drying is optimized.

The enameled surface has been treated with PerfectClean.

The **round perforated baking and AirFry tray HBFP 27-1** can be used for the same purposes.

Grilling and roasting insert HGBB 71

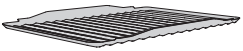

The grilling and roasting insert fits in the universal tray.
When broiling, roasting, or AirFrying, the tray will collect meat juices and stop them from burning so that they can be used for making gravy and sauces.

The enameled surface has been treated with PerfectClean.

Gourmet Casserole Dishes HUB Casserole dish lids HBD

Unlike other roasting dishes, the Miele Gourmet Casserole Dishes can be placed in the oven directly on the side runners. They have non-tip safety notches like the wire rack to prevent them from being pulled out too far.
The surface of the casserole dishes has a non-stick coating.

Gourmet Casserole Dishes are available in different depths. The width and the height are the same.

Suitable lids are available separately. Please quote the model number when ordering.

Depth: 8 1/2" (22 cm)	**Depth: 13 3/4" (35 cm)**
HUB 5000-M HUB 5001-M*	HUB 5001-XL*
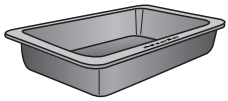	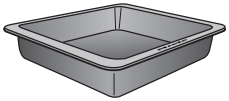
HBD 60-22	HBD 60-35
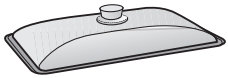	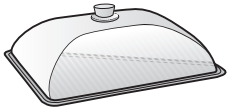

*Suitable for induction cooktops

Precision Probe

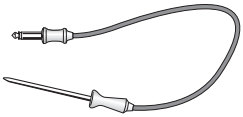

Using the probe enables you to accurately monitor the temperature during the cooking process (see “Roasting – Precision Probe”).

- When using the probe, do not insert the FlexiClip telescopic runners on shelf level 4, otherwise the socket will be blocked.

Accessories for cleaning and care

- Descaling tablets, plastic tube with suction cup for descaling the oven

Safety features

- **System lock** 🔒
  (see “Settings – Safety”)
- **Sensor lock**
  (see “Settings – Safety”)
- **Cooling fan**
  (see “Settings – Cooling fan run-on”)
- **Safety shut-off**
  This safety shut-off is activated automatically if the oven has been operating for an unusually long period of time. The period of time will depend on the particular operating mode being used.
- **Ventilated door**
  The oven door is made of glass panes that have a heat-reflective coating on part of their surface. When the oven is operating, air is passed through the door to keep the outer pane cool.
  You can remove the door for cleaning purposes (see “Cleaning and care of the oven”).
- **Door locking** for Self Clean
  At the beginning of a Self Clean program, the door will lock for safety reasons. The door will only unlock when the temperature in the oven compartment has dropped to below 535°F (280°C).

PerfectClean treated surfaces

PerfectClean surfaces have very good non-stick properties making them exceptionally easy to clean.

Food can be easily removed from these surfaces. Soiling from baking and roasting can also be easily removed from these surfaces.

However, do not use ceramic knives as these will scratch the PerfectClean surface.

Read the instructions in “Cleaning and care of the oven” to retain the benefits of the non-stick properties and easy cleaning.

PerfectClean treated surfaces:

- Universal tray
- Baking tray
- Broiling and roasting insert
- Gourmet baking and AirFry tray, perforated
- Round perforated baking and AirFry tray
- Round baking pan

Self-Clean-ready accessories

See “Cleaning and care of the oven” for more information.

The following accessories can be left in the oven compartment during the Self Clean program:

- Side runners
- FlexiClip telescopic runners HFC 72
- Wire rack

Miele@home

Your oven is equipped with an integrated WiFi module.

To use this feature, you will need:

- A WiFi network
- The Miele app
- A Miele user account. You can create a user account via the Miele app.

The Miele app will guide you as you connect your oven to your home WiFi network.

Once your oven is connected to your WiFi network, you can use the app to carry out various activities, such as:

- Call up information on the operating status of your oven
- Retrieve information on cooking processes that are in progress
- Stop cooking programs that are in progress

Connecting your oven to your WiFi network will increase energy consumption, even when the oven is turned off.

Make sure that the signal of your WiFi network is sufficiently strong in the place where your oven is installed.

Availability of the Wi-Fi connection

The Wi-Fi connection shares a frequency range with other appliances (including microwave ovens and remote control toys). This can cause sporadic or even complete connection failures. Therefore, the availability of featured functions cannot be guaranteed.

Miele@home availability

The ability to use the Miele app depends on the availability of the Miele@home service in your country.

The Miele@home service is not available in every country.

For information about availability, please visit www.miele.com.

Miele App

The Miele App is available to download free of charge from the Apple App Store® or from the Google Play Store™.

Download on the App Store

ANDROID APP ON Google Play

Basic settings

You must make the following settings before starting up for the first time. You can change these settings again at a later time (see “Settings”).

⚠ Risk of injury caused by hot surfaces.
The oven gets hot during operation.
For safety reasons, only use the oven when it has been fully installed.

The oven will turn on automatically when it is connected to the electrical supply.

Setting the language

- Select the desired language.

If you have accidentally selected a language that you don’t understand, proceed as described in “Settings – Language ⚑”.

Setting the location

- Select the required location.

Setting up Miele@home

Set up “Miele@home”? will appear on the display.

- To set up Miele@home immediately, select Continue.
- To set it up at a later date, select Skip. See “Settings – Miele@home” for information on setting up at a later date.
- To set up Miele@home immediately, select the connection method you want to use.

You will then be guided by the display and the Miele app.

Setting the date

- Set the day, then the month, and finally the year.
- Confirm with *OK*.

Setting the time

- Set the time of day in hours and minutes.
- Confirm with *OK*.

Setting the voltage

⚠ The set voltage variant must match the voltage of the domestic electrical supply in order to avoid the risk of damage to the oven.
Confirm the voltage before setting. If in any doubt, consult a qualified electrician.

- Select the voltage variant.
- Confirm with *OK*.

Completing the commissioning process

- Follow any further instructions on the display.

The appliance is now ready for use.

Heating up the oven for the first time and rinsing the steam injection system

New ovens may have a slight odor during their first use. Heating up the oven for at least an hour with nothing in it will eliminate the odor. It is a good idea to rinse out the steam injection system at the same time.

Ensure that the kitchen is well ventilated while the appliance is being heated up for the first time.
Close doors to other rooms to prevent the odor spreading throughout the house.

- Remove any adhesive labels or protective films from the ovens and accessories.
- Before heating the oven up, wipe the interior with a damp cloth to remove any dust or bits of packaging that may have accumulated in the oven compartment during storage and unpacking.
- Insert the FlexiClip telescopic runners into the side runners and insert all trays and the wire rack.
- Turn the oven on using the ⏻ On/Off button.

The main menu will appear.

- Select Operating Modes ▭.
- Select Moisture Plus.
- Select Moist. Plus + Conv Bake.

350°F (160°C) will appear as a recommended value.

The oven heating, lighting, and cooling fan will turn on.

- Set the highest possible temperature.
- Select Continue.
- Select Automatic.
- Select Continue.

A prompt to draw in water will then appear.

- Fill a suitable container with the required amount of fresh tap water.
- Open the door.
- Pull the water intake pipe forward (located below the control panel on the left).

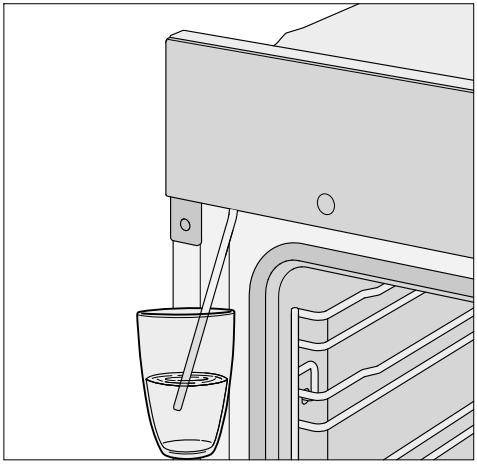

- Place the end of the water intake pipe in the water container with the tap water.
- Confirm with *OK*.

The water intake process will begin.

The amount of tap water actually drawn up into the oven may be less than the amount specified as required, leaving a small amount in the container.

- Remove the water container after the water intake process and close the door.

You will hear the pump again briefly. Residual water in the water intake pipe is being drawn into the oven.

The oven heating, lighting, and cooling fan will turn on.

After a short time, a burst of steam will be released automatically.

⚠ Risk of injury caused by steam.
The steam escaping is very hot.
Do not open the door when the burst of steam is being released.

Heat up the oven for at least an hour.

- After at least an hour, turn the oven off with the ⏻ On/Off switch.

Cleaning the oven compartment after heating it up for the first time

⚠ Risk of injury caused by hot surfaces.
The oven gets hot during operation. You could burn yourself on the heating elements, oven compartment, or accessories.
Allow the heating elements, oven compartment, and accessories to cool before manual cleaning.

- Take all accessories out of the oven compartment and clean it by hand (see “Cleaning and care of the oven”).
- Clean the oven compartment with warm water and liquid dish soap, applied with a soft sponge or microfiber cloth.
- Dry all surfaces with a soft cloth.

Leave the oven door open until the oven compartment is completely dry.

Settings overview

Menu option	Available settings
Language ⚑	... | deutsch | english | ... Location
Time	Display On | Off* | Night dimming Clock type Analog* | Digital Clock format 24 h | 12 h (am/pm)* Set
Date	
Lighting	On "On" for 15 seconds* Off
Start screen	Main menu* Operating Modes Automatic Programs Special Modes Favorites MyMiele
Display	Brightness ■■■■□□□ Color scheme Bright | Dark* QuickTouch On | Off*
Volume	Buzzer tones Melodies ■■■■□□□ Single tone ■■■■□□□ Keypad tone ■■■■□□□ Welcome Melody On* | Off
Units	Temperature °C | °F*

* Factory default

Menu option	Available settings
Booster	On* Off
Rapid cooling	On* Off
Keep warm	On Off*
Recommended temps.	
Self Clean	With reminder Without reminder*
Cooling fan run-on	Time controlled Temperature controlled*
MotionReact	Switch the light on during cook. program* | always on | Off Switch the appliance on On | Off* Acknowledge buzzer On* | Off
Safety	System Lock 🔒 On | Off* Sensor lock On | Off*
Furniture front recognition	On Off*
Miele@home	Activate Deactivate Connection status Set up again Reset Set-up
Remote Control	On* Off
SuperVision	SuperVision display On | Off* Display in Standby On* | Only if there is a fault Appliance list Display this appliance | Buzzer tones

* Factory default

Settings

Menu option	Available settings
Remote Update	On* Off
Electrical version	208V / 60Hz 220V / 60Hz 240V / 60Hz
Calibrate temperature	■■■■□□□
Software version	
Legal information	Open source licenses
Showroom Program	Demo Mode On | Off*
Factory default	Appliance settings Favorites MyMiele Recommended temps.

* Factory default

Opening the “Settings” menu

In the ⚙ Settings menu, you can personalize your oven by adapting the factory default settings to suit your requirements.

From the main menu:

- Select ⚙ Settings.
- Select the setting you want.

You can check settings or change them.

You cannot change settings while a cooking process is in progress.

Language ⚑

You can set your language and location.

After selecting and confirming your choice, the language you have selected will appear on the display.

Tip: If you have accidentally selected a language that you don’t understand, select ⚙ in the main menu. Follow the ⚑ symbol to get back to the Language ⚑ submenu.

Time

Display

Select how you want the time of day to show on the display when the oven is turned off:

- On
  The time of day is always visible on the display. This setting increases energy consumption.
  If you also select the Display | QuickTouch | On setting, all sensor buttons will react to touch straight away and the proximity sensor will automatically detect when you approach the display.
  If you also select the Display | QuickTouch | Off setting, the oven has to be turned on before it can be used.
- Off
  The display appears dark to save energy. The oven has to be turned on before you can use it.
- Night dimming
  The time of day only shows on the display between 5:00 am and 11:00 pm. The display remains dark at all other times. This setting increases energy consumption.

Clock type

The time of day can be displayed as Analog (with a clock face) or Digital (h:min) format.

With the digital display, the date is also shown.

Clock format

The time of day can be displayed in the 24 or 12-hour format (24 h or 12 h (am/pm)).

Set

Set the hours and the minutes.

Tip: If no cooking program is in progress, tap the time in the header to change it.
If there is a power failure, the current time of day will reappear once the power has been restored. The time of day is saved for approx. 150 hours.

If the oven has been connected to a WiFi network and signed into the Miele app, the time will be synchronized based on the location setting in the Miele app.

Date

Set the date.

When the oven is turned off, the date will only appear on the display if the Time	Clock type	Digital setting has been selected.

Lighting

- On
  The oven interior lighting is turned on during the entire cooking process.
- "On" for 15 seconds
  The oven interior lighting turns off 15 seconds after a cooking process has begun. Press the *Light* sensor button to turn the oven interior lighting on again for 15 seconds.
- Off
  The oven interior lighting is turned off. Press the *Light* sensor button to turn the oven interior lighting on for 15 seconds.

Start screen

The oven is set at the factory for the main menu to appear when the oven is turned on. You can change this default setting so that, for instance, the operating modes or MyMiele settings appear on the start screen (see "MyMiele").

This new start screen will then appear when the oven is next turned on.

Select the *Back* sensor button or follow the path in the header to get to the main menu.

Display

Brightness

The display brightness is represented by a segment bar.

- ■■■■■■■
  Maximum brightness
- ■▫▫▫▫▫▫
  Minimum brightness

Color scheme

Choose between a light or dark color scheme for the display.

- Bright
  The display has a light background with dark characters.
- Dark
  The display has a dark background with light characters.

QuickTouch

Select how the sensor buttons and the proximity sensor should respond when the oven is turned off:

- On
  If you have also selected the Time | Display | On or Night dimming setting, the sensor buttons and the proximity sensor will also respond when the oven is turned off. This setting increases energy consumption.
- Off
  Regardless of the Time | Display setting, the sensor buttons and the proximity sensor only respond when the oven is turned on, as well as for a certain amount of time after turning it off.

Volume

Buzzer tones

If audible signals are turned on, an audible signal will sound when the set temperature is reached and at the end of a set time.

Melodies

At the end of a process, a melody will sound several times at intervals.

The volume of the melody is represented by a segment bar.

- ■■■■■■■
  Maximum volume
- ⊏------⊐
  Melody is turned off

Single tone

At the end of a process, a continuous tone will sound for a period of time.

The pitch of this continuous tone is represented by a segment bar.

- ■■■■■■■■■■■■■■
  Maximum pitch
- ■⊏-------------⊐
  Minimum pitch

Keypad tone

The volume of the tone that sounds each time you tap a sensor button is represented by a segment bar.

- ■■■■■■■
  Maximum volume
- ⊏------⊐
  Keypad tone is turned off

Welcome Melody

The melody that sounds when you tap the ⏻ On/Off button can be turned on or off.

Units

Temperature

You can set the temperature in Celsius (°C) or Fahrenheit (°F).

Booster

The Booster function is used to quickly preheat the oven.

- On
  The Booster function is automatically turned on during the preheating phase of a cooking program. The browning/broiling element, ring heating element, and fan all preheat the oven compartment to the required temperature at the same time.
- Off
  The Booster function is turned off during the preheating phase of a cooking program. Only the heating elements for the selected operating mode are used to preheat the oven compartment.

You can also use the pull-down menu to turn the Booster function on or off for a cooking program.

Rapid cooling

Using the Rapid cooling function, you can quickly cool down food and the oven compartment once the cooking program is finished.

This function is useful if, for example, you immediately want to start a automatic program for which the oven compartment needs to be cold.

Using the Keep warm function, you can keep food warm after cooking without inadvertently cooking it further.

- On
  The Rapid cooling function is turned on. Once the cooking program has finished, the door opens a little automatically. The cooling fan cools the food and the oven compartment quickly.

- Off
  The Rapid cooling function is turned off. The door remains closed at the end of the cooking program. The cooling fan cools the food and the oven compartment.

You can also use the pull-down menu to turn the Rapid cooling function on or off for a cooking program.

If your oven is installed behind a closed cabinet door front, follow the instructions in “Settings – Furniture front recognition”.

Keep warm

Using the Keep warm function, you can keep food warm after cooking without inadvertently cooking it further. The food is kept warm at a preset temperature for up to 2 hours (Settings | Recommended temps. | Keep warm).

It is only possible to use the Keep warm function in combination with the Rapid cooling function.

- On
  The Keep warm function is turned on. Once the cooking program has finished, the door opens a little automatically. The cooling fan cools the food and the oven compartment quickly to the preset temperature. Once this temperature is reached, the door closes again automatically in order to keep the food warm.
- Off
  The Keep warm function is turned off. The door remains closed at the end of the cooking program. The cooling fan cools the food and the oven compartment.

You can also use the pull-down menu to turn the Keep warm function on or off for a cooking program.

If your oven is installed behind a closed cabinet door front, follow the instructions in “Settings – Furniture front recognition”.

Recommended temps.

If you often cook with temperatures that differ from the default, the recommended temperatures can be changed.

After you select this menu option, a list of operating modes will appear on the display.

- Select the operating mode you want to use.

The recommended temperature will appear together with the range within which it can be changed.

- Change the recommended temperature.
- Confirm with *OK*.

You can also change the recommended temperature for the Keep warm function.

Self Clean

You can set whether the recommendation for carrying out the Self Clean function will appear (With reminder) or will not appear (Without reminder).

Cooling fan run-on

The cooling fan will continue to run for a while after the oven has been turned off to prevent any humidity building up in the oven, on the control panel, or in the cabinet carcase.

- Temperature controlled
  The cooling fan turns off when the temperature in the oven drops below approx. 160°F (70°C).
- Time controlled
  The cooling fan turns off after a period of about 25 minutes.

Condensation can damage the cabinet carcase and the countertop. This could lead to corrosion of the appliance.
When keeping food warm in the oven, increases to the Time controlled setting can lead to condensation in the control panel and moisture on the countertop and cabinet doors.
Do not adjust the Time controlled setting and try not to leave food in the warm oven.

Proximity sensor (MotionReact)

The proximity sensor detects when you approach the touch display, e.g., with your hand or body.

If you want the proximity sensor to respond even when the oven is turned off, select the Display | QuickTouch | On setting.

Switch the light on

- during cook. program
  As soon as you approach the touch display during a cooking process, the oven interior lighting turns on. The oven interior lighting automatically turns off again after 15 seconds.
- always on
  As soon as you approach the touch display, the oven interior lighting turns on. The oven interior lighting automatically turns off again after 15 seconds.
- Off
  The proximity sensor does not respond when you approach the touch display. Press the *Light* sensor button to turn the oven interior lighting on for 15 seconds.

Switch the appliance on

- On
  If the time is displayed, the oven willturn on and the main menu will appear as you approach the touch display.
- Off
  The proximity sensor does not respond when you approach the touch display. Turn the oven on using the ⏻ On/Off button.

Acknowledge buzzer

- On
  As soon as you approach the touch display, the audible signals turn off.
- Off
  The proximity sensor does not respond when you approach the touch display. Turn the audible signals off manually.

Safety

System Lock 🔒

The system lock prevents the oven from being turned on inadvertently.

You can still set an alarm and a timer, as well as use the MobileStart function when the system lock is active.

The system lock will remain activated even after a power failure.

- On
  The system lock is now active. If you want to use the oven, touch 🔒 for at least 6 seconds.
- Off
  The system lock is now deactivated. You can use the oven as normal.

Sensor lock

The sensor lock prevents the cooking program from being turned off by mistake or settings from being changed. Once activated, the sensor lock prevents the sensor buttons and fields on the display from working for a few seconds after a program has been started, with the exception of the ⏻ On/Off button.

- On
  The sensor lock is active. Touch *OK* for at least 6 seconds to deactivate the sensor lock for a short period of time.
- Off
  The sensor lock is not active. All sensor buttons react to touch as normal.

Furniture front recognition

- On
  Furniture front recognition is activated. Using the proximity sensor, the oven automatically detects whether the cabinet door is closed.

  If the cabinet door is closed, the oven turns off automatically after a certain period.
- Off
  Furniture front recognition is deactivated. The oven does not detect whether the cabinet door is closed.

If the oven is installed behind a cabinet door, the oven, cabinet niche, and the floor can be damaged by the build-up of heat and moisture behind the closed cabinet door.

Always leave the cabinet door open when you are using the oven.

Leave the cabinet door open until the oven has cooled down completely.

Tip: Turn off furniture front recognition if you want to use the Sabbath Program.

Miele@home

The oven is a Miele@home-compatible domestic appliance with SuperVision functionality.

Your oven is equipped ex-works with a WiFi communication module and is suitable for wireless communication.

There are a number of ways of connecting your oven to your WiFi network. We recommend connecting your oven to your WiFi network with the help of the Miele app or via WPS.

- Activate
  This setting is only visible if Miele@home is deactivated. The WiFi function is reactivated.
- Deactivate
  This setting is only visible if Miele@home is activated. Miele@home remains set up; the WiFi function is turned off.
- Connection status
  This setting is only visible if Miele@home is activated. The display shows information such as the WiFi reception quality, network name, and IP address.
- Set up again
  This setting is only visible if a WiFi network has already been set up. Reset the network settings and set up a new network connection straight away.
- Reset
  This setting is only visible if a WiFi network has already been set up. The WiFi function is deactivated and the connection to the WiFi network will be reset to the factory default. You must set up a new connection to the WiFi network to be able to use Miele@home.
  Reset the network settings if you are disposing of or selling your oven, or if you are putting a used oven into operation. This is the only way to ensure that all personal data has been removed and the previous owner will no longer be able to access the oven.
- Set-up
  This setting is only visible if no connection to the WiFi network has been set up yet. You must set up a new connection to the WiFi network to be able to use Miele@home.

Remote Control

If you have installed the Miele app on your mobile device, have access to the Miele@home system, and have activated the remote control function (On), you can use the MobileStart function to retrieve information on oven cooking programs that are in progress or to end a program in progress.

Activating MobileStart

■ Select the *Remote* sensor button to activate MobileStart.

The *Remote* sensor button lights up. You can operate your oven remotely with the Miele app.

Directly operating on the oven takes priority over operating it via the remote control function on the app.

You can use MobileStart as long as the *Remote* sensor button is lit up.

SuperVision

The oven is a Miele@home-compatible appliance with SuperVision functionality for monitoring other domestic appliances in the Miele@home system.

The SuperVision function cannot be activated until the Miele@home system has been set up.

SuperVision display

- On
  The SuperVision function is turned on. The 👁 symbol will appear in the top right-hand corner of the display.
- Off
  The SuperVision function is turned off.

Display in Standby

The SuperVision function is also available when the oven is in standby. However, the time-of-day display must be turned on (Settings | Time | Display | On).

- On
  Active domestic appliances that are signed on to the Miele@home system are always displayed.
- Only if there is a fault
  Only faults on active domestic appliances are displayed.

Appliance list

All domestic appliances signed on to the Miele@home System are displayed. Once you have selected an appliance, you can access further settings:

- Display this appliance
  - On
    The SuperVision function for this appliance is turned on.
  - Off
    The SuperVision function for this appliance is turned off. The appliance is still signed on to the Miele@home system. Faults are displayed, even if the SuperVision function for the appliance has been turned off.
- Buzzer tones
  You can select whether the audible signals are turned on (On) or turned off (Off) for this appliance.

Remote Update

The Remote Update menu option is only displayed and can only be selected if the requirements for using Miele@home have been met (see “Before first use – Miele@home”).

The RemoteUpdate function is used for updating the software in your oven. If an update is available for your oven, it will automatically download it. Updates will not be installed automatically. They must be initiated manually.

If you do not install an update, you can continue to use your oven as usual. However, Miele recommends installing updates.

Activating/deactivating

The RemoteUpdate function is activated as standard. Available updates will be downloaded automatically but will only be installed if you initiate installation manually.

Deactivate RemoteUpdate if you do not want any updates to be downloaded automatically.

Running a RemoteUpdate

Information about the content and scope of an update is provided in the Miele app.

A message will appear on your oven display if a software update is available.

You can install the update immediately or postpone this until later. When the oven is turned on again, you will be reminded about the update.

Deactivate RemoteUpdate if you do not want to install the update.

The update may take several minutes.

Please note the following information about the RemoteUpdate function:

- You will only receive a message when an update is available.
- Once an update has been installed, it cannot be undone.

- Do not turn the oven off during the update. Otherwise, the update will be aborted and will not be installed.
- Some software updates can only be carried out by Miele Customer Service.

Electrical version

You can set the voltage variant. The setting must correspond to the voltage of your domestic electrical supply.

Calibrate temperature

You can change the temperature in increments in all operating modes and automatic programs so that it is higher or lower in the oven compartment than displayed.

The temperature calibration is represented by a bar with seven segments.

If all of the segments are filled, the oven compartment temperature is much higher than displayed. If one segment is filled, the oven compartment temperature is much lower than displayed.

Software version

The software version menu option is for use by Miele Technical Service. You do not need this information for domestic use.

■ Confirm with *OK*.

Legal information

You can find an overview of the integrated open-source components under Open source licenses.

■ Confirm with *OK*.

Showroom Program

This function enables the oven to be demonstrated in dealer showrooms without heating up. Do not activate this setting for domestic use.

Demo Mode

If you have Demo mode activated, Demo mode is active. The appliance will not heat up will appear when you turn on the oven.

- On
  Touch *OK* for at least 4 seconds to activate Demo mode.
- Off
  Touch *OK* for at least 4 seconds to deactivate Demo mode. You can use the oven as normal.

Factory default

- Appliance settings
  Any settings that have been altered will be reset to the factory default settings.
- Favorites
  All Favorites will be deleted.
- MyMiele
  All MyMiele entries will be deleted.
- Recommended temps.
  Any recommended temperatures that have been changed will be reset to the factory default settings.

Operating Hours (total)

Select Operating Hours (total) to query the total number of operating hours of your oven.

Using the *Timer* sensor button, you can set a timer (e.g., for boiling eggs) or an alarm for a specific time.

Using the Alarm function

The ⏲ alarm can be used to specify a particular time for an audible signal to sound.

Setting the alarm

If the Display | QuickTouch | Off setting is selected, you will need to turn the oven on before setting the alarm. The alarm time will then appear on the display when the oven is turned off.

- Select the *Timer* sensor button.
- Select ⏲ Alarm.
- Set the time for the alarm.
- Tap Close to confirm.

When the oven is turned off, the alarm time and ⏲ will appear instead of the time of day.

If you are cooking at the same time or if you are in a different menu, the alarm time and ⏲ will appear in the top right-hand corner of the display.

At the specified time for the alarm, ⏲ will flash on the display next to the time and an audible signal will sound.

- Select the *Timer* sensor button or the set alarm time on the display.

The audible signal will stop and the symbols on the display will go out.

Changing an alarm

- Select the alarm on the display or select the *Timer* sensor button and the alarm you want.

The set alarm time will appear on the display.

- Set the new time for the alarm.
- Tap Close to confirm.

The adjusted alarm time is now saved and will appear on the display.

Deleting an alarm

- Select the alarm on the display or select the *Timer* sensor button and the alarm you want.

The set alarm time will appear on the display.

- Select Delete.
- Tap Close to confirm.

The alarm is deleted.

Using the Timer function

The 🔔 timer can be used to time other activities in the kitchen, e.g., boiling eggs.

The timer can also be used at the same time as a cooking program for which the start and finish times have been set (e.g., as a reminder to stir the food or add seasoning, etc.).

- The maximum timer duration that can be set is 59 minutes and 59 seconds.

Tip: When using an operating mode with moisture injection, use the timer to remind you to inject steam manually at the required time.

Setting the timer

If you have selected the Display | QuickTouch | Off setting, you will need to turn the oven on before setting the timer. The timer can then be seen counting down on the display when the oven is turned off.

Example: you want to boil some eggs and set a timer of 6 minutes and 20 seconds.

- Select the *Timer* sensor button.
- Select 🔔 Timer.
- Set the required timer duration.
- Tap Close to confirm.

When the oven is turned off, the timer duration counts down on the display and 🔔 appears instead of the time of day.

If you are cooking at the same time or if you are in a different menu, the timer duration and 🔔 will appear in the top right-hand corner of the display.

At the end of the timer duration, 🔔 will flash, the time will start counting up, and an audible signal will sound.

- Select the *Timer* sensor button or the required timer on the display.

The audible signal will stop and the symbols on the display will go out.

Changing the timer

- Select the timer on the display or select the *Timer* sensor button and then the timer duration you want.

The set timer duration will appear.

- Set a new timer duration.
- Tap Close to confirm.

The changed timer duration is now saved and will count down in minutes. Timer durations of less than 10 minutes will count down in seconds.

Deleting the timer

- Select the timer on the display or select the *Timer* sensor button and then the timer duration you want.

The set timer duration will appear.

- Select Delete.
- Tap Close to confirm.

The timer is deleted.

Main and submenus

As different countries have different preferences when it comes to preparing food, the temperatures in °F and °C may not match. The temperatures are defined as they are specified in the table.

Menu	Recommended temp.	Range
Operating Modes		
Convection	350°F (160°C)	85–475°F (30–250°C)
AirFry	425 °F (210 °C)	85–475°F (30–250°C)
Surround	400°F (180°C)	85–525°F (30–280°C)
Moisture Plus		
Moisture Plus + Auto Roast	350°F (160°C)	275–475°F (130–230°C)
Moist. Plus + Conv Bake/ Moisture + Conv Roast	350°F (160°C)	275–475°F (130–250°C)
Moisture Plus + Intensive	350°F (170°C)	275–475°F (130–250°C)
Moisture Plus + Surround	350°F (180°C)	275–525°F (130–280°C)
Intensive	400°F (170°C)	125–475°F (50–250°C)
Auto Roast	375°F (160°C)	200–450°F (100–230°C)
Bake	375°F (190°C)	200–525°F (100–280°C)
Browning	350°F (190°C)	200–475°F (100–250°C)
Maxi Broil	500°F (240°C)	400–575°F (200–300°C)
Broil	500°F (240°C)	400–575°F (200–300°C)
Convection Broil	400°F (200°C)	200–500°F (100–260°C)

Menu	Recommended temp.	Range
Automatic Programs Auto		
Special Modes		
Defrost	100°F (25°C)	75–125°F (25–50°C)
Dehydrate	150°F (60°C)	85–175°F (30–70°C)
Warm-up Cookware	175°F (80°C)	125–225°F (50–100°C)
Proof		
Proof for 15 minutes	–	–
Proof for 30 minutes	–	–
Proof for 45 minutes	–	–
Slow Roasting	225°F (100°C)	175–250°F (80–120°C)
Sabbath Program		
Surround	350 °F (180 °C)	120–475°F (50–250°C)
Bake	350 °F (180 °C)	120–475°F (50–250°C)
Keep warm	175°F (75°C)	125–200°F (60–90°C)
MyMiele		
Favorites		
Settings		
Maintenance		
Descale		
Self Clean		

Cooking programs

- If possible, use the automatic programs for cooking food.
- Remove any accessories from the oven that you do not require for cooking.
- If a temperature range is given in the recipe, it is best to select the lower temperature and check the food after the shortest cooking time given.
- Preheat the oven only if instructed to do so in the recipe.
- If possible, do not open the door during a cooking process.
- It is best to use dark bakeware and steam oven pans with a matte finish made of non-reflective materials (enameled steel, heat-resistant glass, non-stick coated cast aluminum). Shiny materials such as stainless steel or aluminum reflect the heat and therefore can give a more uneven result. Do not cover the oven floor or the wire rack with heat-reflecting aluminum foil.
- Monitor cooking durations to avoid wasting energy when cooking.
  Set the cooking duration, or use a probe if you have one.
- The Convection operating mode can be used for cooking many dishes. Because the fan distributes the heat in the oven compartment straight away, it allows you to use a lower temperature than you would with Surround. It also enables you to cook on multiple shelf levels at the same time.
- Convection Broil is the best operating mode for broiled dishes. Lower temperatures can be used than with other broil modes that use the maximum temperature setting.
- Whenever possible you should cook several dishes at the same time. Place them next to each other in the oven or on different shelf levels.
- Dishes which you are unable to prepare at the same time should, if possible, be cooked one after the other in order to make use of existing heat in the oven.

Residual heat utilization

- The temperature in cooking programs using temperatures above 285°F (140°C) which take longer than 30 minutes to cook can be turned down to the lowest possible temperature about 5 minutes before the end of cooking. The residual heat in the oven is sufficient for cooking the food until it is done. However, do not turn the oven off (see “IMPORTANT SAFETY INSTRUCTIONS”).
- If you have set a cooking duration for a cooking program, the oven heating elements will turn off automatically shortly before the end of cooking. The residual heat in the oven is sufficient to complete the cooking process.
- It is best to start the Self Clean program immediately after a cooking program. The residual heat in the oven will help reduce the amount of energy required.

Settings

- Select the Display | QuickTouch | Off setting for the control elements in order to reduce energy consumption.
- Select the Lighting | Off or “On” for 15 seconds setting for the oven interior lighting. You can turn the oven interior lighting on again at any time by tapping the *Light* sensor button.

Energy-saving mode

The oven will turn itself off automatically to save energy if a program is not being run and no controls have been operated. The time of day will appear on the display or the display will remain dark (see “Settings”).

- Turn the oven on.

The main menu will appear.

- Place the food in the oven compartment.
- Select Operating Modes ▭.
- Select the operating mode you want to use.

The operating mode and recommended temperature will appear.

- Adjust the recommended temperature, if necessary.

Otherwise, the recommended temperature will be accepted within a few seconds. You can change the temperature later by selecting the temperature indicator.

- Confirm with *OK*.

The required and the actual temperature will appear and the heating-up phase will begin.

You will see the temperature rising on the display. An audible signal will sound when the set temperature is reached for the first time.

- After the cooking process, select Finish.
- Take the food out of the oven compartment.
- Turn the oven off.

Changing values and settings for a cooking program

Depending on the operating mode, as soon as a cooking program is in progress, you can change the values or settings for this program.

Depending on the operating mode, you can change the following settings:

- Temperature
- Duration
- Ready at
- Start at
- Booster
- Preheat
- Rapid cooling
- Keep warm
- Crisp function

Changing the temperature and core temperature

Via Settings | Recommended temps., you can permanently adjust the recommended temperature to suit your cooking preferences.

The core temperature only appears if you are using the probe (see “Roasting – Probe”).

- Tap the temperature display.
- Change the temperature and the core temperature as required.
- Confirm with *OK*.

The cooking program will resume with the new target temperatures.

Setting additional durations

Cooking results can be adversely affected if there is a long delay between the food being placed in the oven and the start of cooking. Fresh food can change color and even spoil. When baking, the cake mixture or dough can dry out, and the raising agents can lose their effectiveness.

Select as short a time as possible until the start of the cooking process.

You have placed the food in the oven compartment, selected an operating mode and the required settings such as the temperature.

By entering Duration, Ready at or Start at, you can automatically turn the cooking process off or on and off.

- Duration
  Enter the required cooking duration for the food. The oven heating will turn off automatically once the cooking duration has elapsed. The maximum cooking duration that can be set depends on the operating mode that you have selected.
- Ready at
  Specify when you want the cooking process to finish. The oven will turn off automatically at the time you have set.
- Start at
  This function will only appear in the menu if you have set a Duration or Ready at time. With Start at, you have to specify when you want the cooking process to start. The oven will turn on automatically at the time you have set.

■ Select ◷ or Timer.

■ Set the required times.

■ Confirm with *OK*.

Changing set durations

■ Select ◷, the duration, or Timer.

■ Select the time you want and change it.

■ Confirm with *OK*.

These settings will be deleted in the event of a power failure.

Deleting the set cooking durations

■ Select ◷, the duration, or Timer.

■ Select the time you want.

■ Select Delete.

■ Confirm with *OK*.

If you delete Duration, the set durations for Ready at and Start at are also deleted.

If you delete Ready at or Start at, the cooking program will start using the cooking duration set.

Canceling a cooking program

If you cancel a cooking program, the oven heating and lighting will turn off. Any cooking durations set will be deleted.

When the Rapid cooling function is turned on, the door automatically opens a little when the cooking program is finished, and the cooling fan quickly cools the food and the oven compartment.

Select Close to return to the main menu.

Canceling a cooking program without a set cooking duration

■ Select Finish.

The main menu will appear.

Canceling a cooking program with a set cooking duration

■ Select Cancel.

Cancel cooking? will appear.

■ Select Yes.

The main menu will appear.

Preheating the oven compartment

The Booster function is used to quickly preheat the oven compartment in some operating modes.

The Preheat function can be used with any operating mode and has to be turned on separately for each cooking process.
If you have set a cooking duration, it will only start to count down when the target temperature is reached and you have placed the food in the oven.

The oven compartment only needs to be preheated in a few cases.

■ You can place most dishes in the cold oven compartment to make use of the heat produced during the heating-up phase.

■ Preheat the oven when cooking the following food with the following operating modes:

- dark bread dough as well as prime rib and fillets with the Convection, Moisture Plus, and Surround operating modes
- cakes, cookies, and pastries with a short cooking duration (approx. 30 minutes or less) as well as delicate items (e.g., sponge) with the Surround operating mode (without the Booster function)

Booster

The Booster function is used to quickly preheat the oven.

This function is turned on as the factory default setting for the following operating modes (Settings | Booster | On):

- Convection
- AirFry
- Surround
- Auto Roast
- Moisture Plus

If you set a temperature above 210°F (100°C) and the Booster function is turned on, a rapid preheating phase heats the oven compartment to the set temperature. The browning/broiling element and the ring heating element come on together with the fan.

Delicate items (e.g., sponge or cookies) will brown too quickly on the top if the Booster function is used.
Turn off the Booster function for these items.

Turning Booster on or off for a cooking program

If you have selected the Booster | On setting, you can turn the function off separately for a cooking program.

On the other hand, you can also turn on the function separately for a cooking program if you have selected the Booster | Off setting.

Example: You have selected an operating mode and the required settings such as the temperature.
You want to turn off the Booster function for this cooking program.

- Drag down the pull-down menu.

Booster is highlighted in orange.

- Select Booster.

Depending on the color scheme, Booster is highlighted in either black or white.

- Close the pull-down menu.

The Booster function is turned off during the preheating phase. Only the heating elements for the selected operating mode are used to preheat the oven compartment.

Preheat

The oven compartment only needs to be preheated in a few cases.

You can place most dishes in the cold oven compartment to make use of the heat produced during the preheating phase.

> If you have set a cooking duration, it will only start to count down when the target temperature is reached and you have placed the food in the oven.
>
> Start the cooking process immediately without delaying the start time.

Turning Preheat on

The Preheat function can be used with any operating mode and has to be turned on separately for each cooking program.

Example: You have selected an operating mode and the required settings such as the temperature.
You want to turn on the Preheat function for this cooking program.

- Drag down the pull-down menu.

Depending on the color scheme, Preheat is highlighted in either black or white.

- Select Preheat.

Preheat is highlighted in orange.

- Close the pull-down menu.

The following message will be displayed with a time: Place food in oven at . The oven compartment is heated to the set temperature.

- As soon as you are prompted to do so, place the food in the oven.
- Confirm with *OK*.

Rapid cooling

Using the Rapid cooling function, you can quickly cool down food and the oven compartment once the cooking program is finished.

Turning Rapid cooling on or off for a cooking program

If you have selected the Rapid cooling | On setting, you can turn the function off separately for a cooking program.

On the other hand, you can also turn on the function separately for a cooking program if you have selected the Rapid cooling | Off setting.

Example: You have selected an operating mode and the required settings such as the temperature.
You want to turn off the Rapid cooling function for this cooking program.

■ Drag down the pull-down menu.

Rapid cooling is highlighted in orange.

■ Select Rapid cooling.

Depending on the color scheme, Rapid cooling is highlighted in either black or white.

If the Keep warm function is also turned on, When "Rapid cooling" is deactivated "Keep warm" is also turned off. will appear.

■ If necessary, confirm the message with *OK*.

■ Close the pull-down menu.

The Rapid cooling and Keep warm functions are turned off. The door remains closed at the end of the cooking program. The cooling fan cools the food and the oven compartment.

Keep warm

Using the Keep warm function, you can keep food warm after cooking without inadvertently cooking it further.
The food is kept warm at a preset temperature (see "Settings – Recommended temps.").
If you are using the probe, the oven compartment temperature for keeping food warm will be approx. 70°F (20°C) greater than the core temperature.

It is only possible to use the Keep warm function in combination with the Rapid cooling function.

If you have selected the Keep warm | On setting, you can turn the function off separately for a cooking program.

On the other hand, you can also turn on the function separately for a cooking program if you have selected the Keep warm | Off setting.

Turning Keep warm on for a cooking program

Example: You have selected an operating mode and the required settings such as the temperature.
You want to turn on the Keep warm function for this cooking program.

■ Drag down the pull-down menu.

Depending on the color scheme, Keep warm is highlighted in either black or white.

■ Select Keep warm.

When the Rapid cooling function is also turned off, "Keep warm" requires "Rapid cooling". This function will be activated. will appear.

■ If necessary, confirm the message with *OK*.

Keep warm and Rapid cooling are highlighted in orange.

■ Close the pull-down menu.

The Keep warm and Rapid cooling functions are turned on.
Once the cooking program has finished, the door opens a little automatically.
The cooling fan cools the food and the oven compartment quickly to the preset temperature.
Once this temperature is reached, the door closes again automatically in order to keep the food warm.

Turning Keep warm off for a cooking program

Example: You have selected an operating mode and the required settings such as the temperature.
You want to turn off the Keep warm function for this cooking program.

- Drag down the pull-down menu.

Keep warm is highlighted in orange.

- Select Keep warm.

Depending on the color scheme, Keep warm is highlighted in either black or white.

The setting for the Rapid cooling function does not change.

- Close the pull-down menu.

The Keep warm function is turned off. The door remains closed at the end of the cooking program. The cooling fan cools the food and the oven compartment.

Crisp function

It is a good idea to use the Crisp function function (moisture reduction) when cooking food which has a moist topping, e.g., quiche, pizza, tray bakes with fresh fruit toppings, or muffins.

Poultry in particular gets a nice crisp skin with this function.

Turning Crisp function on

The Crisp function function can be used with any operating mode and has to be turned on separately for each cooking program.

You have selected an operating mode and the required settings such as the temperature.
You want to turn on the Crisp function function for this cooking program.

- Drag down the pull-down menu.

Depending on the color scheme, Crisp function is highlighted in either black or white.

- Select Crisp function.

Crisp function is highlighted in orange.

- Close the pull-down menu.

The Crisp function function is turned on.

Changing the operating mode

You can change to another operating mode during a cooking program.

- Tap the symbol for the selected operating mode.
- If you have set a cooking duration, confirm the Cancel? message with Yes.
- Select the new operating mode.

The new operating mode will appear on the display with its corresponding recommended values.

- Set the values for the cooking program and confirm with *OK*.

Moisture Plus

Your oven is equipped with a steam injection system for cooking with moisture. When baking, roasting, and cooking with the Moisture Plus function, optimized steam supply and air flow guarantee even cooking and browning results.

You can also use moisture injection with various types of heating:

- Moisture Plus + Auto Roast
- Moist. Plus + Conv Bake
- Moisture Plus + Intensive
- Moisture Plus + Surround

After selecting the operating mode you want, set the temperature and the number and type of bursts of steam (Automatic, Manual, or With timer).

Fresh tap water is taken into the steam system via the tube underneath the control panel on the left.

> Liquids, other than water, can cause damage to the oven.
>
> Only use tap water when cooking with moisture injection.

The water is injected as bursts of steam into the oven compartment during the cooking program. The steam openings are located in the rear left corner of the ceiling of the oven.

Suitable food

One burst of steam takes about 5–8 minutes. The number of bursts of steam and when they are injected will depend on the type of food being cooked:

- **Yeast doughs** will rise better if steam is injected at the beginning of the program.
- **Bread and bread rolls** rise better if steam is released at the start. Another burst of steam at the end of the program will give the bread and rolls a glistening crust.
- When **roasting meat with a high fat content**, injecting steam at the beginning of roasting will help render the fat.

Moisture injection is not suitable for mixtures which already contain a lot of moisture, such as meringues. These need to dry out during the baking process.

Starting a cooking program with Moisture Plus

It is normal for condensation to form on the inside of the door during steam injection. This will dissipate during the course of the cooking program.

- Prepare the food and place it in the oven.
- Select Operating Modes.
- Select Moisture Plus.
- Select the operating mode you want with moisture injection.
  The cooking programs proceed in the same way for all heating types.

The recommended temperature will appear.

Setting the temperature

- Adjust the recommended temperature, if necessary.
- Select Continue.
- If necessary, turn on the Preheat function via the pull-down menu.

The selection display for releasing the bursts of steam will then appear.

Selecting the bursts of steam

- Select Automatic, Manual, or With timer.

- Automatic
  1 burst of steam will be injected into the oven automatically after the preheating phase.
- Manual
  You can release 1, 2, or 3 bursts of steam manually using the touch display.
- With timer
  You can set the times for the bursts of steam to be released. The oven will inject 1, 2, or 3 bursts of steam at the set times.

If you are cooking food such as bread or bread rolls in a preheated oven, it is best to release the bursts of steam manually and turn on the Preheat function. The first burst of steam should be released as soon as you have placed the food in the oven.

If you select more than one burst of steam, the second burst of steam cannot be released before the temperature in the oven compartment has reached at least 265°F (130°C).

If you want to use the Preheat function, take the preheating phase into account for the manual and time-controlled bursts of steam (see “Operation – Preheat”).

- Select the number of bursts of steam (for Manual and With timer only).
- Set the times for the bursts of steam as required.
- Select Continue.

A prompt to draw in water will then appear.

Preparing and starting the water intake process

- Fill a suitable container with the required amount of fresh tap water.
- Open the door.
- Pull the water intake pipe forward (located below the control panel on the left).

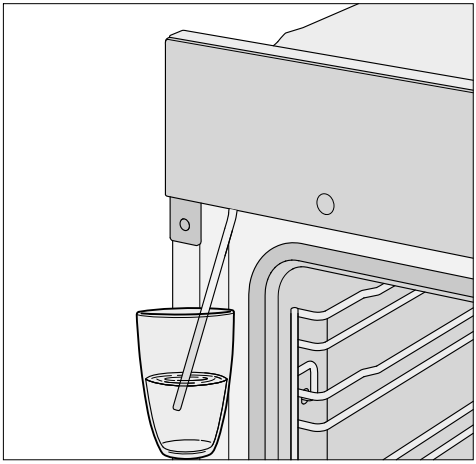

- Place the end of the water intake pipe in the water container with the tap water.
- Confirm with *OK*.

The water intake process will begin.

The amount of water actually drawn up into the oven may be less than the amount specified as required, leaving a small amount in the container.

You can interrupt and restart the intake process at any time by selecting Stop or Start.

- Remove the water container after the water intake process and close the door.

You will hear the pump again briefly. Residual water in the water intake pipe is being drawn into the oven.

The oven heating and cooling fan will turn on. The required and the actual temperature will appear.

You will see the temperature rising on the display. An audible signal will sound when the set temperature is reached for the first time.

If you have selected With timer, you can check the time before steam is released by selecting ℹ Info.

Injecting bursts of steam

⚠ Risk of injury caused by steam.
Steam can cause severe scalding.
In addition, steam condensing on the control panel will cause the sensor buttons and the touch display to react more slowly.
Do not open the door while bursts of steam are being released.

Automatic

Once the preheating phase is complete, the burst of steam is injected automatically.

The water will evaporate in the oven compartment and Burst of steam will appear on the display.

After the steam has been released, Burst of steam will disappear.

- Continue cooking until the end of the cooking duration.

Manual

You can release the bursts of steam as soon as Burst of steam appears and Start is shown in green.

Please wait until the preheating phase is completed to allow the steam to be distributed evenly by the warm air in the oven.

Tip: Use the Timer 🔔 function as a reminder.

- Select Start.

The burst of steam will be released. Start is deactivated.

- Proceed as described to release further bursts of steam once Start is shown in green.

After the final burst of steam, Start is deactivated.

- Continue cooking until the end of the cooking duration.

With timer

The oven will release the bursts of steam automatically at the specified times.

Burst of steam appears when the burst of steam is being released.

After the final burst of steam, Burst of steam will disappear.

- Continue cooking until the end of the cooking duration.

Evaporate residual moisture

When cooking with moisture injection, the water will be equally distributed between the number of steam bursts and completely used up, as long as the program is not interrupted.

However, if a program using moisture injection is interrupted before all the bursts of steam have been injected or there is a power failure, the water for these unused bursts of steam will remain in the system.

The next time Moisture Plus or a MasterChef automatic program with moisture injection is used, Evaporate residual moisture will appear on the display with the options.

- It is best to start the residual moisture evaporation right away so that only fresh water is steamed onto the food during the next cooking program.

⚠ Risk of injury caused by steam.
Steam can cause severe scalding.
Do not open the door while bursts of steam are being released.

Depending on the amount of water, this can take up to approximately 30 minutes.

The oven compartment is heated up and the remaining water is evaporated, causing condensation to form in the oven compartment and on the door.

- This condensation needs to be wiped off the door and the oven compartment once the oven has cooled down.

Starting the residual water moisture process immediately

⚠ Risk of injury caused by steam.
Steam can cause severe scalding.
Do not open the door while bursts of steam are being released.

- Select an operating mode or a MasterChef automatic program that uses moisture injection.

The prompt Evaporate residual moisture? will then appear.

- Select Yes.

Evaporate residual moisture and a time will then appear on the display.

The residual moisture evaporation process will start. You can follow the time counting down on the display.

The time shown on the display will depend on the amount of residual water left in the steam injection system. During the evaporation process, the duration may be adjusted by the system according to the amount of water currently present.

At the end of the residual moisture evaporation process, Ready will appear on the display.

- Select Close.

A cooking process using an operating mode or an automatic program with moisture injection can now be run.

During residual moisture evaporation, moisture will condense on the door and inside the oven compartment. This moisture needs to be wiped off after the oven compartment has cooled down.

Skipping the residual moisture evaporation process

Skipping the residual water moisture process can cause water to overflow into the oven compartment.
Do not cancel the evaporation process.

- Select an operating mode or a MasterChef automatic program that uses moisture injection.

Evaporate residual moisture? will appear.

- Select Skip.

A cooking program using an operating mode or a MasterChef automatic program with moisture injection can now be run.

You will be prompted to carry out the residual moisture evaporation process the next time you select an operating mode or a MasterChef automatic program that uses moisture injection, and when you turn the oven off.

Automatic Programs

With the wide range of automatic programs, you can achieve excellent results with ease.

Categories

The automatic programs Auto are sorted into categories to provide a better overview. Simply select the appropriate automatic program for the type of food you are cooking and follow the instructions on the display.

Using automatic programs

■ Select Automatic Programs Auto.

A list will appear.

■ Select the food category you want.

The automatic programs available for the category selected will then appear.

■ Select the automatic program that you want to use.

■ Follow the instructions on the display.

Some automatic programs will prompt you to use the probe. Read the information under “Roasting – Probe”.

Core temperatures cannot be changed for automatic programs.

Tip: Use ℹ Info to display information such as how to place or turn the food depending on the cooking program.

Usage notes

- After cooking, allow the oven compartment to cool down to room temperature again before starting a automatic program.
- Some automatic programs require a preheating phase before food can be placed in the oven. A prompt will appear on the display indicating when this needs to be done.
- Some automatic programs require liquid to be added during the cooking process. You will be prompted by a message on the display when this needs to be done (e.g., for adding liquid).
- The duration quoted for automatic programs is an estimate. It may increase or decrease depending on the program. The duration, in particular with meat, will vary depending on the initial temperature of the food.
- When you use the probe, the cooking duration will depend on when the core temperature is reached.
- If by the end of a automatic program the food is not cooked enough for your taste, select Cont. cooking or Continue baking. Conventional heating will then be used for 3 minutes to continue cooking or baking the food.

Search

(Depending on language)
Under Automatic Programs, you can search by the name of the categories and the automatic programs.

This search is a full-text search and can also be used to search for parts of words.

From the main menu:

- Select Automatic Programs Auto.

The category list will appear on the display.

- Select Search.
- Use the keyboard to type in the search text, e.g., “Bread”.

The number of hits will be shown in the footer.

If no match is found or if there are more than 40 matches, the hits field will be deactivated and you will need to change the search text.

- Select XX hits.

The categories and automatic programs found will then appear.

- Select the automatic program you want, or the category and then the automatic program you want.

The automatic program will start.

- Follow the instructions on the display.

This section provides information on the following applications:

- Defrost
- Dehydrate
- Warm-up Cookware
- Proof
- Slow Roasting
- Sabbath Program
- Keep warm
- Canning
- Frozen food/ready meals

Defrost

Gentle defrosting of frozen goods means that the vitamins and minerals are generally retained.

■ Select Special Modes ✡.

■ Select Defrost.

■ If necessary, adjust the recommended temperature and set the duration.

Air is circulated throughout the oven compartment to gently defrost the food.

Always observe USDA/CFIA food safety guidelines.

⚠ Risk of infection from bacteria.

Bacteria such as salmonella can cause life-threatening food poisoning.

It is particularly important to observe food hygiene rules when defrosting fish and meat, and in particular when defrosting poultry.

Do not use the liquid produced during defrosting.

Process the food as required as soon as it has been defrosted.

Tips

- Remove the packaging and place the frozen food on the universal tray or in a suitable bowl or dish.
- Use the universal tray with the wire rack placed on top of it for defrosting poultry. This way the food will not be lying in the defrosted liquid.
- Fish does not need to be fully defrosted before cooking. Defrost until the food has started to thaw. The surface will then be sufficiently thawed to take herbs and seasoning.

Defrosting durations

The duration needed for defrosting depends on the type and weight of the frozen food:

Frozen food	[oz/g]	[min]
Chicken	28/800	90–120
Meat	17.5/500	60–90
	35/1000	90–120
Sausage	17.5/500	30–50
Fish	35/1000	60–90
Strawberries	10.5/300	30–40
Pound cake	17.5/500	20–30
Bread	17.5/500	30–50

Weight/ defrosting duration

Dehydrate

Dehydrating or drying is a traditional method of preserving fruit, certain vegetables, and herbs.

It is important to check that fruit and vegetables are fresh, ripe, and not bruised before they are dehydrated.

- Prepare the food for drying by cutting it up, and peeling and coring it if necessary.
- Depending on how big it is, distribute the food for drying as evenly as possible over the wire rack or universal tray in a single layer.

Tip: You can also use the perforated Gourmet baking and AirFry tray, if you have one.

- Dry on a maximum of 2 levels at the same time.
  Place the food for drying on shelf levels 1+3.
  If using the wire rack and universal tray, place the universal tray below the wire rack.
- Select Special Modes ☼.
- Select Dehydrate.
- Change the recommended temperatures and set the drying time.
- Follow the instructions on the display.
- Turn the food for drying on the universal tray at regular intervals.

The drying times are longer for whole or halved dried food.

Food for drying	▭	🌡 [°F/°C]	◷ [h]
Fruit	☼	140-160 (60–70)	2–8
Vegetables	☼	130-150 (55–65)	4–12
Mushrooms	☼	115-125 (45–50)	5–10
Herbs*	▭	85-95 (30–35)	4–8

▭ Special Modes/Operating mode,
🌡 Temperature, ◷ Drying time,
☼ Special Mode Dehydrate,
▭ Operating mode Surround

* When drying herbs, always use the universal tray on shelf level 2 and use the Surround ▭ operating mode, as the fan is switched on in the Dehydrate Special Mode.

- Reduce the temperature if condensation begins to form in the oven compartment.

Removing the dried food

⚠ Risk of injury caused by hot surfaces.
The oven gets hot during operation. You could burn yourself on the heating elements, oven compartment, or accessories.
Use pot holders when removing the food from the oven.

- Allow the fruit or vegetables to cool down after dehydrating.

Dried fruit must be completely dry, but also soft and elastic. Juice should not escape when cut.

- Store dried food in sealed glass jars or cans.

Warm-up Cookware

By preheating the dishware, the food does not cool down as quickly.

Use heat-resistant dishware.

- Place the wire rack on shelf level 2 and place the dishware to be heated on it. Depending on the size of the dishware, you can also place the rack on the oven floor and take the side runners out to make more room.
- Select Special Modes ✲.
- Select Warm-up Cookware.
- Alter the recommended temperature if necessary and then set the time.
- Follow the instructions on the display.

⚠ Risk of injury caused by hot surfaces.
The oven gets hot during operation. You could burn yourself on the heating elements, oven compartment, or accessories. Condensation may accumulate on the bottom of the dishware.
Use oven mitts when removing dishware.

Proof

This mode is designed specifically for proofing dough.

- Select Special Modes ✲.
- Select Proof.
- Select the proofing time.
- Follow the instructions on the display.

Keep warm

You can keep food warm in the oven for several hours.

In order to maintain the quality of food, select the shortest possible time.

- Select Special Modes ✲.
- Select Keep warm.
- Place the food to be kept warm in the oven and confirm with *OK*.
- Alter the recommended temperature if necessary and then set the time.
- Follow the instructions on the display.

Slow Roasting

The Slow Roasting method is ideal for cooking beef, pork, veal, or lamb when you want a tender result.

Always observe USDA/CFIA food safety guidelines.

First briefly sear the meat on all sides at a high temperature on the cooktop in order to seal it.

Then place the meat in the preheated oven compartment where the low temperature and long cooking duration will cook it to perfection and ensure it is very tender.

The meat will relax. The juices inside will start to circulate evenly throughout the meat to reach the outer layers.
This gives very tender and succulent results.

- Only use lean meat which has been correctly seasoned and trimmed. Bones should be removed before cooking.
- For searing, use a suitable cooking oil or fat that can withstand high temperatures (e.g., clarified butter, vegetable oil).
- Do not cover meat during the cooking process.

The cooking duration takes approx. 2–4 hours depending on the weight and size of the meat and how well you want it cooked.

- As soon as the cooking process has finished, you can carve the meat straight from the oven. It does not need to rest.
- You can leave the meat in the oven to keep warm until you serve it. This will not affect results in any way.
- Serve on preheated plates with very hot sauce or gravy to prevent it cooling down too quickly. The meat is at an ideal temperature to eat straight away.

Tip: Using the pull-down menu, turn on the Keep warm function to keep the food warm without inadvertently cooking it further.

Using the Slow Roasting Special Mode

Observe the information under "Roasting – Precision Probe".

- Select Special Modes ✡.
- Select Slow Roasting.
- Follow the instructions on the display. Place the necessary accessories in the oven compartment for the preheating phase.
- Set the temperature and the core temperature.
- While the oven is preheating, sear the meat on all sides on the cooktop.

⚠ Danger of burning due to hot surfaces.
The oven gets hot during operation. You could burn yourself on the heating elements, oven compartment, or accessories.
When the oven is hot, use pot holders to insert, remove, or turn food, as well as when adjusting the oven shelves, etc.

- Once Insert the probe and place in the oven appears on the display, place the seared meat on the wire rack and insert the probe so that the metal tip is fully in the center of the meat.
- Close the door.

At the end of the program, Ready will appear on the display and an audible signal will sound.

Using the Surround operating mode

Use the universal tray with the wire rack placed on top of it.
Turn off the Booster function for the preheating phase.

- Place the wire rack with the universal tray on shelf level 2.
- Select Operating Modes ▭.
- Select the Surround ☰ operating mode and a temperature of 250°F (120°C).
- Turn off the Booster function via the pull-down menu.
- Preheat the oven together with the universal tray and wire rack for approx. 15 minutes.
- While the oven is preheating, sear the meat on all sides on the cooktop.

⚠ Danger of burning due to hot surfaces.
The oven gets hot during operation. You could burn yourself on the heating elements, oven compartment, or accessories.
When the oven is hot, use pot holders to insert, remove, or turn food, as well as when adjusting the oven shelves, etc.

- Place the seared meat on the wire rack.
- Reduce the temperature to 210°F (100°C).
- Continue cooking until the end of the cooking duration.

Cooking durations/core temperatures

Always observe USDA/CFIA food safety guidelines.

Meat	Cooking duration	Core temperature
Beef tenderloin, approx. 2.2 lbs (1 kg)		
- rare	60–80 min	113–119°F (45–48°C)
- medium	75–85 min	129–135°F (54–57°C)
- well done	110–130 min	145–151°F (63–66°C)
Prime rib, approx. 2.2 lbs (1 kg)		
- rare	70–80 min	113–119°F (45–48°C)
- medium	105–115 min	129–135°F (54–57°C)
- well done	130–140 min	145–151°F (63–66°C)
Pork tenderloin, approx. 0.75 lbs (350 g)	70–90 min	145–156°F (63–69°C)
Gammon joint*, approx. 2.2 lbs (1 kg)	140–160 min	145–151°F (63–66°C)
Veal tenderloin, approx. 2.2 lbs (1 kg)		
- pink	45–55 min	113–119°F (45–48°C)
- medium	75–85 min	129–135°F (54–57°C)
- well done	90–100 min	145–151°F (63–66°C)
Saddle of veal*, approx. 2.2 lbs (1 kg)		
- pink	75–85 min	113–119°F (45–48°C)
- medium	100–130 min	129–135°F (54–57°C)
- well done	130–140 min	145–151°F (63–66°C)
Saddle of lamb*	40–60 min	129–151°F (54–66°C)

* Boneless

Sabbath Program

The Sabbath Program and Yom-Tov Special Modes help to support religious observance.

To comply with the Sabbath regulations, follow the instructions on the display.

The oven heats up to the temperature you have set and maintains this temperature for a maximum of 24 hours (Sabbath Program) or 76 hours (Yom-Tov). In both Special Modes, the oven turns off automatically after 76 hours.

- Turn off cabinet door front recognition.
- Place the food in the oven.
- Select Special Modes ✲.
- Select Sabbath Program.
- Select the Special Mode you want (Sabbath Program or Yom-Tov).
- Select the operating mode you want to use.

You will not be able to start the Special Mode if you have set a timer or alarm.

Once a Special Mode has started, it cannot be changed or saved under Favorites.

The Special Mode will be canceled in the event of a power failure. After a power failure, the oven will only remain in compliance with Sabbath regulations for as long as it continues to be disconnected from the power supply. As soon as the connection is restored, Power failure -program cancelled is displayed.

Using Sabbath Program

This Special Mode is suitable for the weekly Sabbath (Shabbat). You can use it to keep food warm for up to 24 hours, until after the first door opening.

- Set the temperature.
- Select Start.

Sabbath Program and the set temperature will appear in the display.

The oven heating will turn on around 30 seconds after you have closed the door. The oven interior lighting will remain on during the entire cooking process.

The time of day will not appear. The motion sensor will not respond, and neither will any of the sensor buttons (except for the On/Off switch ⏻).

The following message is displayed: Sabbath - Do not open the door. This message disappears after approx. 45 minutes and is displayed again from time to time after that.

If the message is **not** displayed, the oven is not heating up and you can open the door and close it again.
As soon as you have opened the door for the first time, the oven heating **remains turned off** until the end of the Special Mode.

If you leave the door closed until the end of the Special Mode, the oven heating will only turn off after 24 hours. The oven remains turned on.

- If you want to end the Special Mode prematurely, turn off the oven using the On/Off switch ⏻.

After the end of the Special Mode, the notification Sabbath - Do not open the door disappears and the oven heating turns off. The rest of the notifications remain visible in the display until the oven turns off automatically after 76 hours.

Using Yom-Tov

This Special Mode is suitable for days of observance spanning several days across the week. You can use it to keep food warm for up to 76 hours. You can open and close the door multiple times during this time.

- Set the temperature.
- Select Start.

Yom-Tov and the set temperature will appear in the display.

The oven heating will turn on around 30 seconds after you have closed the door. The oven interior lighting will remain on during the entire cooking process.

The time of day will not appear. The motion sensor will not respond, and neither will any of the sensor buttons (except for the On/Off switch ⏻).

The following message is displayed: Sabbath - Do not open the door. This message disappears after approx. 45 minutes and is displayed again from time to time after that.

If the message is **not** displayed, you can open and close the door multiple times. The oven heating **remains on**.

- If you want to end the Special Mode prematurely, turn off the oven using the On/Off switch ⏻.

The oven heating remains turned on until the end of the Special Mode. The oven will turn off automatically after 76 hours.

Canning

⚠ Risk of infection from bacteria.
The spores of the botulinum bacterium are not sufficiently killed by canning legumes and meat only once. Toxins may form which can lead to serious poisoning. These spores are only destroyed by canning the food again.
After they have cooled down, **always** reheat legumes and meat a second time within 2 days.

⚠ Risk of injury from increased pressure in sealed cans.
Canning food and heating it up in closed containers results in an increase in pressure which can cause them to explode.
Do not use cans for canning or reheating food.

Always observe USDA/CFIA food safety guidelines.

Preparing fruit and vegetables

The instructions are for 6 jars with a capacity of 1 L each.

Only use jars that are specifically designed for canning (preserving jars or jars with a screw cap). Only use undamaged jars and rubber rings.

- Rinse the jars with hot water before canning and fill them up to a maximum of 3/4" (2 cm) below the rim.
- After filling the jars, clean the outside of the rims with a clean cloth and hot water, and then seal the jars.
- Slide the universal tray onto shelf level 2. Place the jars on the tray.
- Select the Convection operating mode and a temperature of 320–340°F (160–170°C).
- Wait until bubbles rise evenly in the jars.

Then reduce the temperature to prevent the contents from boiling over.

Canning fruit and vegetables

- Set the specified post-canning warming temperature as soon as bubbles are visible in the jars, then leave the jars in the warm oven for the time specified.

Canning vegetables

- As soon as bubbles are visible in the jars, set the specified canning temperature and cook the vegetables for the time specified.
- After canning, set the specified post-canning warming temperature, then leave the jars in the warm oven for the time specified.

	🌡/🕒	🌡/⌛
Fruit	–/–	85°F (30°C) 25–35 min
Pickling cucumbers	–/–	85°F (30°C) 25–30 min
Red beets	250°F (120°C) 30–40 min	85°F (30°C) 25–30 min
Beans (green or yellow)	250°F (120°C) 90–120 min	85°F (30°C) 25–30 min

🌡/🕒 Canning temperature and time once bubbles are visible in the jars
🌡/⌛ Post-canning warming temperature and time

Removing the jars after canning

⚠ Risk of injury caused by hot surfaces.
The jars will be very hot after canning. Use oven mitts when removing the jars from the oven.

- Take the jars out of the oven.
- Cover the jars with a towel and leave to set for approx. 24 hours in a draft-free area.
- After they have cooled down, **always** reheat beans and meat a second time within 2 days.
- Remove the fasteners from the jars and make sure all jars are closed properly when storing them.

Either boil open jars again or store them in a cool place and consume the preserved fruit or vegetables immediately.

- Check the jars during storage. If jars have opened during storage or if the screw cap is bulging and does not make a popping noise when opened, dispose of the contents.

Frozen food/ready meals

Tips for cakes, pizza, and baguettes

- Bake cakes, pizza, and baguettes on parchment paper on the wire rack.
- Use the lowest temperature recommended by the manufacturer.

Tips for French fries, croquettes, and similar items

Use the AirFry operating mode to cook these frozen foods (see “AirFry”).

Preparing frozen food/ready meals

Handling and cooking food correctly is essential for maintaining good health.

Cakes, pizzas, and French fries should be cooked until golden, not dark brown.

- Select the operating mode and temperatures recommended on the food’s packaging.
- Preheat the oven.
- Place the food in the preheated oven on the shelf level recommended on the packaging.
- Check the food at the end of the shortest time recommended on the packaging.

Under MyMiele, you can save frequently used applications.

It is particularly useful with the automatic programs as you do not need to work through every menu level in order to start a program.

Tip: You can also set menu options that you have entered in MyMiele to appear on the start screen (see “Settings – Start screen”).

Adding entries

You can add up to 20 entries.

- Select MyMiele.
- Select Add entry.

You can select options from the following categories:

- Operating Modes
- Automatic Programs Auto
- Special Modes
- Favorites
- Maintenance

- Confirm with *OK*.

The selected subitem and its respective symbol will appear in the list.

- Proceed as described for further entries. Only options that have not yet been selected are available for selection.

Deleting entries

- Select MyMiele.
- Touch the entry you want to delete and keep your finger on it until the context menu appears.
- Select Delete.

The entry will then be removed from the list.

Moving entries

- Select MyMiele.
- Touch the entry you want to move and keep your finger on it until the context menu appears.
- Select Move.

An orange border will appear around the entry.

- Move the entry.

The entry will now appear in the position you want it in.

Favorites

You can create and save up to 20 of your own programs.

- You can combine up to 9 cooking stages to accurately program your favorite or most frequently used recipes. In each cooking stage, you can select settings such as the operating mode, temperature, and cooking duration or core temperature.
- You can specify the shelf level(s) for the food.
- You can enter a program name for your recipe.

When you next select the program, it will start automatically.

There are different ways of creating a Favorite:

- When a automatic program finishes running, save it as a separate program.
- After running a program with a set duration, save it.

Then name the program.

Creating a Favorite

■ Select Favorites [i].

■ Select Create program.

You can now specify the settings for the first cooking stage.

Follow the instructions on the display:

■ Select and confirm the settings.

If you select the Preheat function, use Add to add another cooking stage where you set a cooking duration. Only then can you save or start the program.

All settings for the first cooking stage have now been set.

More cooking stages can be added, for example, if you would like to add another operating mode to follow the first.

■ If additional cooking stages are required, select Add and proceed as for the first cooking stage.

■ When you have finished setting the cooking stages, select Set shelf level.

■ Select the level(s) you want.

■ Confirm with *OK*.

If you want to check the settings or to change them at a later stage, tap the cooking stage in question.

■ Select Save.

■ Enter the program name using the keyboard.

You can add a line break for longer program names using the ⌠ symbol.

■ Once you have entered the program name, select Save.

A message will appear on the display confirming that the name has been saved.

■ Confirm with *OK*.

You can start the saved program immediately, delay the start, or change the cooking stages.

Starting a Favorite

- Place the food in the oven.
- Select Favorites [ ].
- Select the program you want to use.

Depending on the program settings, the following menu options will appear on the display:

- Start now
  The program will start immediately. The oven heating will turn on immediately.
- Ready at
  You can set the time at which the cooking program should end. The oven will turn off automatically at the time you have set.
- Start at
  You can set the time at which the cooking program should start. The oven will turn on automatically at the time you have set.
- Display cook. stages
  A summary of your settings will appear on the display.
- Display actions
  The required actions, e.g., placing the food in the oven, will appear on the display.

- Select the menu option you want.
- Confirm the message regarding which shelf level to use with *OK*.

The selected program will begin automatically right away or at the time set.

Use ℹ Info to display information such as how to place or turn the food depending on the cooking program.

During the cooking program, you can use the pull-down menu to turn the Rapid cooling and Keep warm functions on or off.

- At the end of the program, select Close.

Changing cooking stages

Cooking stages in an automatic program that have been saved under a different name cannot be changed.

- Select Favorites [ ].
- Touch the program you want to change and keep your finger on it until the context menu appears.
- Select Change.
- Select the cooking stage that you want to change or Add to add another cooking stage.
- Select and confirm the settings.
- If you want to start the modified program without changing it, select Start.
- Select Save when you have changed all the settings.

A message will appear on the display confirming that the name has been saved.

- Confirm with *OK*.

The saved program has been changed and you can start it immediately or delay the start.

Renaming Favorites

- Select Favorites [ ].
- Touch the program you want to change and keep your finger on it until the context menu appears.
- Select Rename.
- Change the program name using the keyboard.

You can add a line break for longer program names using the ⌡ symbol.

- Once you have changed the program name, select Save.

A message will appear on the display confirming that the name has been saved.

- Confirm with *OK*.

The program has now been renamed.

Deleting a Favorite

- Select Favorites [ ].
- Touch the program you want to delete and keep your finger on it until the context menu appears.
- Select Delete.
- Confirm the query with Yes.

The program is deleted.

Go to Settings | Factory default | Favorites to delete all Favorites at the same time.

Moving Favorites

- Select Favorites [ ].
- Touch the program you want to move and keep your finger on it until the context menu appears.
- Select Move.

An orange border will appear around the entry.

- Move the program.

The program will now appear in the position you want it in.

Handling and cooking food correctly is essential for maintaining good health.
Cakes, pizzas, and French fries should be cooked until golden, not dark brown.

Always observe USDA/CFIA food safety guidelines.

Tips for baking

- Set a cooking duration. If used for baking, do not delay the start for too long. Otherwise the cake mixture or dough will dry out, and the raising agents will lose their effectiveness.
- Generally speaking, you can use wire racks, baking trays, universal trays, and any type of bakeware made of heat-resistant material.
- Avoid using bright, thin-walled pans made from a shiny material as they give an uneven or poor browning result. In certain unfavorable conditions, the food will not cook properly.
- Place cakes in rectangular bakeware on the wire rack with the longer side across the width of the oven for optimum heat distribution and even results.
- Always place bakeware on the wire rack.
- When baking cakes with fruit toppings or deep cakes, place the pan on the universal tray to catch any spillages.

Using parchment paper

Miele accessories, e.g., the universal tray, are treated with PerfectClean (see “Features”). Surfaces treated with PerfectClean generally do not need to be greased or covered with parchment paper.

- Use parchment paper when baking lye mixtures (e.g., pretzels) because the sodium hydroxide can damage the PerfectClean treated surface.
- Use parchment paper when baking sponge cake, meringue, macaroons, or similar items. These are more likely to stick due to their high egg white content.
- Use parchment paper when cooking frozen food on the wire rack.

Selecting the 🌡 temperature

- Select the suggested temperature in general.

Choosing a baking temperature higher than those recommended may reduce the cooking time, but will lead to uneven browning and unsatisfactory cooking results.

Selecting the ◷ cooking duration

- Check whether the food is cooked shortly before the end of the specified cooking duration. Stick a wooden skewer into the food.

If it comes out clean without any batter/dough on it, the food is done.

Notes on the operating modes

You can find an overview of all the operating modes with their recommended values in “Main and submenus”.

Using Automatic Programs Auto

■ Follow the instructions on the display.

Using Convection

Because the blower distributes the heat around the oven compartment straight away, you can use a lower temperature than you would with the Surround operating mode.

Use this operating mode if you are baking on multiple shelf levels at the same time.

■ 1 shelf: Place the food on shelf level 2.

■ 2 shelves: Place the food on shelf levels 1+3 or 2+4.

■ 3 shelves: Place the food on shelf levels 1+3+5.

Tips

- If you are cooking on multiple shelf levels at the same time, slide the universal tray in on the lowest level.
- For moist cookies and cakes, bake on a maximum of 2 shelf levels at once.

Using Moisture Plus

Use this operating mode with your preferred type of heating for cooking with moisture injection.

■ Place the food on shelf level 2.

Using Intensive

Use this operating mode for baking cakes with moist toppings.

Do **not** use this operating mode for baking thin biscuits.

■ Place cakes on shelf level 1 or 2.

Using Surround

Dark metal, enamel, or aluminum bakeware with a matte finish, as well as heat-resistant glass, ceramic, and coated bakeware can be used.

Use this operating mode for cooking traditional recipes. If using an older recipe or cookbook, set the oven temperature 25°F (10°C) lower than that recommended. This will not change the cooking duration.

■ Place the food on shelf level 1 or 2.

Always observe USDA/CFIA food safety guidelines.

Tips for roasting

- You can use all dishware made from temperature-resistant materials, e.g., roasting dishes, roasting pans with lid, ovenproof glass dishes, roasting bags, dishes made from earthenware or cast iron, the universal tray, wire rack, and/or anti-splash insert (if available) on top of the universal tray.
- **Preheating** the oven is only required when preparing roast beef and fillets. Preheating is generally not necessary.
- Use a **closed cooking container** for roasting meat, such as a roasting dish. The meat will stay succulent. The oven compartment will also stay cleaner than when roasting on the wire rack. It ensures that enough stock remains for making gravy.
- If you are using a **roasting bag**, follow the instructions on the packaging.
- If you are using the **wire rack** or an **open cooking container** for roasting, you can add a little fat or oil to very lean meat or place a few strips of bacon on the top.
- **Season** the meat and place in the cooking container. Dot with butter or brush with oil or cooking fat. For large lean cuts of meat (4–6 lb/2–3 kg) and fatty poultry, add about 1/2 cup (1/8 liter) of water to the dish.
- Do not add too much liquid during cooking as this will hinder the **browning** process. Browning only occurs towards the end of the cooking duration. Remove the lid about halfway through the cooking duration if you want a more intensive browning result.
- At the end of the program, take the food out of the oven, cover it, and leave to **stand** for about 10 minutes. This helps retain the juices when the meat is sliced.
- For a crisp finish, baste **poultry** 10 minutes before the end of the cooking duration with slightly salted water.

Selecting the 🌡 temperature

- As a general rule, select the temperature given in the corresponding recipe.
- For large pieces of meat, do not choose a temperature that is too high. The roasting process will take longer, but the meat will cook through evenly and the skin or crackling will not be too thick.
- When cooking with Convection, Moisture Plus, and Auto Roast, select a temperature approx. 50°F (20°C) lower than when using Surround.
- When roasting on the wire rack, set a temperature approx. 25°F (10°C) lower than for roasting in a covered cooking container.

Selecting the ⏲ cooking duration

- Check whether the food is cooked shortly before the end of the specified cooking duration.

Tips

- For frozen meat, increase the cooking duration by approx. 10 minutes per lb (20 minutes per kg).
- Frozen meat weighing less than approx. 3.3 lb (1.5 kg) does not need to be defrosted before roasting.

Notes on the operating modes

You can find an overview of all the operating modes with their recommended values in “Main and submenus”.

Use the Bake operating mode towards the end of the cooking duration to brown the base of the food.

Do not use the Intensive operating mode for roasting as the juices will become too dark.

Using Automatic Programs Auto

- Follow the instructions on the display.

Using Convection or Auto Roast

These operating modes are suitable for roasting meat, fish, and poultry that needs to be well browned, as well as prime rib and fillet.

The Convection operating mode allows you to use a lower temperature than you would with the Surround operating mode, because the heat is immediately distributed throughout the oven compartment.

With the Auto Roast operating mode, the oven compartment heats initially to the highest temperature in this operating mode for searing. As soon as this temperature has been reached, the oven automatically drops the temperature back down to the preselected cooking temperature (continued roasting temperature).

- Place the food on shelf level 2.

Using Moisture Plus

Use this operating mode with your preferred type of heating for cooking with moisture injection.

- Place the food on shelf level 2.

Using Surround

Use this operating mode for cooking traditional recipes. If using an older recipe or cookbook, set the oven temperature 50 °F (10 °C) lower than that recommended. This will not change the cooking duration.

- Place the food on shelf level 2.

Food Probe

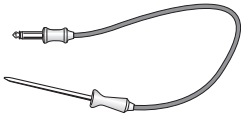

The probe allows you to monitor the roasting process simply and reliably.

How it works

The metal tip of the roast probe must be fully inserted into the center of the food all the way to the handle. There is a temperature sensor in the metal tip which measures the core temperature of the food during the cooking process. The rise in the core temperature reflects the extent to which the food is cooked. You can program the core temperature to be lower or higher, depending on whether you want your meat to be rare, medium, or well done.

The maximum core temperature setting is 210°F (99°C).

The cooking time will be similar when cooking with or without the wireless food probe.

When to use the probe

Some automatic programs and Special Modes will prompt you to use the probe.

You can also use the probe with Favorites and with the following operating modes:

- Auto Roast
- AirFry
- Intensive
- Surround
- Moisture Plus + Auto Roast
- Moist. Plus + Conv Bake/
  Moisture + Conv Roast
- Moisture Plus + Intensive
- Moisture Plus + Surround

Important usage notes

- You can place the meat in a pot or on the wire rack.
- The metal tip of the probe must be fully inserted into the center of the food so that the temperature sensor reaches more or less to the core.
- When cooking poultry, insert the metal part into the thickest part of the breast. You can find the thickest part of the breast by pressing the area with your thumb and index finger.
- The metal tip must not touch any bone or be inserted in areas with a lot of fat. Fatty tissue and bones can cause the probe to turn off early.
- When using aluminum foil or roasting bags, insert the probe through the foil/bag into the center of the food. You can also place meat inside the bag or foil with the probe already inserted. Be sure to follow the instructions provided by the manufacturer of the roasting bag or aluminum foil.

Using the probe

- Fully insert the metal tip of the probe into the center of the meat all the way to the handle.

If you are cooking several pieces of meat at the same time, insert the probe into the largest piece of meat.

- Place the food in the oven.

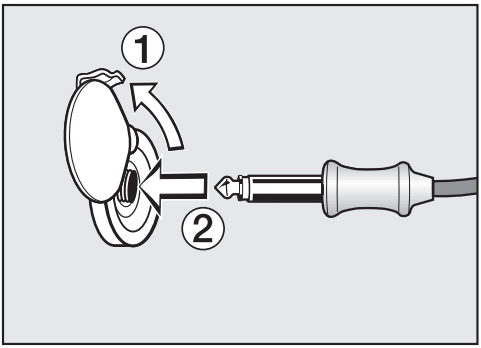

- Insert the plug of the probe into the socket until you feel it engage.
- Close the door.
- Select an operating mode or automatic program.
- Set the temperature and the core temperature if necessary.

Core temperatures cannot be changed for automatic programs.

Follow the instructions on the display.

The cooking program finishes as soon as the core temperature is reached.

⚠ Risk of injury caused by hot surfaces.

The probe can get hot. You could burn yourself on it.

Use pot holders when removing the probe from its socket.

Delaying the start of a cooking program with probe

You can also delay the start of the cooking program to a later time.

- Select Start at.

You can estimate approximately when the food will be ready as the duration of the cooking program is about the same as if you were cooking food without using the probe.

You cannot set Duration and Ready at because the total cooking duration is determined by when the set core temperature is reached.

Time-left display

If the temperature set for a cooking process is above 285°F (140°C), the estimated duration remaining (time left) will appear on the display.

The time left is calculated from the cooking temperature selected, the set core temperature, and the progress of the core temperature as it rises.

The time left first shown is an estimate. As the cooking process continues, the time left is revised continuously, and a more accurate figure is shown.

The time left will be deleted if the cooking temperature or core temperature is changed or if a different operating mode is selected. If the door is opened for a longer time, the time left will be recalculated.

⚠ Risk of injury caused by hot surfaces.
If you broil with the door open, the hot air will escape from the oven before it has been cooled by the cooling fan. The control elements will get hot.
Broil with the oven door closed.

Always observe USDA/CFIA food safety guidelines.

Tips for broiling

- Preheating is necessary when broiling. Preheat the browning/broiling element for approx. 5 minutes with the door closed.
- Add a little oil to lean meat if necessary. Do not use other types of fat as they can easily burn and cause smoke.
- Clean fish in the normal way. To enhance the flavor, season with a little salt. You can also drizzle the fish with lemon juice.
- Use the universal tray with the wire rack or the broiling and roasting insert (if present) placed on top. The tray under the insert will collect the meat juices and stop them from burning so that they can be used for making gravy and sauces. Brush the wire rack or the broiling and roasting insert with oil and then place the food on top.

Do not use the baking tray.

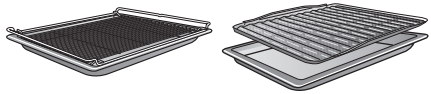

Selecting the 🌡 temperature

- As a general rule, select the temperature given in the corresponding recipe.
- For large pieces of meat, do not choose a temperature that is too high. The roasting process will take longer, but the meat will cook through evenly and the skin or crackling will not be too thick.

Choosing a shelf level

- Select the shelf level depending on the thickness of the food to be cooked.
- Place flat food on shelf level 3 or 4.
- Place thicker food on shelf level 1 or 2.

Selecting the ⏲ cooking duration

- Broil thinner cuts of meat/slices of fish for approx. 6–8 minutes per side. It is best to broil food of a similar thickness at the same time so that the cooking durations do not vary too much.
- Check whether the food is cooked shortly before the end of the specified cooking duration.

Tip: If the surface of a thicker cut of meat is browned but the center is still raw, move the food to a lower level or reduce the temperature and continue broiling. This will stop the surface from becoming too dark.

Notes on the operating modes

You can find an overview of all the operating modes with their recommended values in “Main and submenus”.

The plastic on the probe can melt at very high temperatures.

Do not use the probe when using the broiling operating modes.

Do not store the probe in the oven compartment when it is not being used.

Using Maxi Broil

Use this operating mode to broil flat thin cuts in large quantities and for browning large baked dishes.

The entire browning/broiling element will become red hot to produce the necessary heat.

Using Broil

Use this operating mode to broil flat thin cuts in smaller quantities and for browning small baked dishes.

Only the center of the browning/broiling element glows red to generate the required heat.

Using Convection Broil

This operating mode is suitable for broiling thicker food, such as chicken.

We generally recommend a temperature setting of 425°F (220°C) for thinner types of food and 350-400°F (180–200°C) for thicker cuts.

Handling and cooking food correctly is essential for maintaining good health.

Food such as French fries should be cooked until golden, not dark brown.

The AirFry operating mode is used to fry food in hot air. AirFrying is a gentle method of cooking which achieves even, crispy results.

AirFrying is therefore ideal for cooking frozen food such as French fries or potato croquettes.

Accessories

- For **food that does not drip**, e.g., French fries, use the Gourmet baking and AirFry tray, perforated.
  The fine perforations of the Gourmet baking and AirFry tray ensure that the food is browned and crispy on all sides.

- For **food that drips**, e.g., chicken thighs, use the universal tray with the grilling and roasting insert (if present) placed on top.
  The grilling and roasting insert will collect the meat juices and stop them from burning so that they can be used for making gravy and sauces. Brush the grilling and roasting insert with oil and then place the food on top.

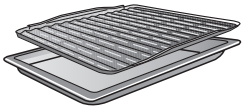

- Place food in bakeware centrally on the rack.

Tips for AirFrying

- Do not defrost frozen food.
- Place the food in the oven without preheating.
  If the food is not crispy enough for you, you can try preheating the oven next time.
- Only cook on one level.
  Cooking on multiple levels will create too much moisture in the oven compartment and the food will not become crispy.
- As a general rule, food should be placed on shelf level 2.
  If you want more browning on top, you can use a higher shelf level next time.
- Food such as French fries should be turned halfway through the cooking duration if possible.
  Set the timer to remind you.

Using the AirFry operating mode

■ Spread the food evenly over the dishware in a single layer if possible.

■ Place the food on shelf level 2.

■ Select Operating Modes.

■ Select the AirFry operating mode.

The recommended temperature will appear.

■ Adjust the recommended temperature, if necessary.

The recommended temperature will be accepted within a few seconds. You can change the temperature later by selecting the temperature indicator.

■ Confirm with *OK*.

- At the end of the cooking duration, check whether the food is crispy and brown enough.
- After the cooking process, select Finish.
- Take the food out of the oven compartment.
- Turn the oven off.

⚠ Risk of injury caused by hot surfaces.
The oven gets hot during operation. You could burn yourself on the heating elements, oven compartment, or accessories.
Allow the heating elements, oven compartment, and accessories to cool before manual cleaning.

⚠ Risk of injury due to electric shock.
The steam from a steam cleaning appliance could reach live electrical components and cause a short circuit.
Never use a steam cleaner for cleaning.

All surfaces could be discolored or damaged if unsuitable cleaning agents are used. The oven front is particularly susceptible to damage from oven cleaners or descaling agents.
All surfaces are susceptible to scratching. Scratches on glass can lead to breakage in some circumstances.
Remove all cleaning agent residues immediately.

Unsuitable cleaning agents

To avoid damaging the surfaces of your appliance, do not use the following cleaning agents:

- cleaning agents containing soda, ammonia, acids, or chlorides
- cleaning agents containing descaling agents on the front
- abrasive cleaning agents (e.g., powder cleaners and cream cleaners)
- solvent-based cleaning agents
- stainless steel cleaners
- dishwasher cleaning agents
- glass cleaners
- cleaning agents for glass-ceramic cooktops
- hard, abrasive brushes or sponges (e.g., pot scourers, brushes, or sponges which have been previously used with abrasive cleaning agents)
- eraser sponges
- sharp metal scrapers
- steel wool
- spot cleaning with mechanical cleaning agents
- oven cleaners
- stainless-steel spiral pads

If soiling is allowed to sit for any length of time, it may become impossible to remove. If the appliance is used frequently without being cleaned, it may become very difficult to clean.
It is therefore best to remove any soiling immediately.

The accessories are not dishwasher-safe.

Tip: Soiling caused by spilled fruit juices and cake mixtures is best removed while the oven is still warm. Use caution and make sure the oven is not too hot.

To make it easier to clean the oven:

- Remove the door.
- Remove the side runners together with the FlexiClip telescopic runners (if present).
- Lower the browning/broiling element.

Removing normal soiling

There is a fiberglass seal around the oven compartment which seals the inside of the glass oven door and can be damaged by rubbing and scouring.
Avoid cleaning the fiberglass seal. The fiberglass seal is essential for sealing the door properly.

Removing normal soiling

- Remove normal soiling immediately with warm water, liquid dish soap, and a clean sponge or a clean, damp microfiber cloth.
- Remove all cleaning agent residues thoroughly with clean water.
  This is particularly important for any parts with a PerfectClean finish, as cleaning agent residues will impair the non-stick function.
- After cleaning, wipe the surfaces dry using a soft cloth.

Cleaning the probe

Do not put the probe into water or clean it in the dishwasher as this will damage it.
Clean the probe with a damp cloth only.

Removing stubborn soiling

Do not line the oven (e.g., with aluminum foil) and do not use standard oven cleaners unless they are suitable for use in a self-cleaning oven.
Spilt fruit and roasting juices may cause lasting discoloration or matte patches on surfaces. This discoloration will not affect the properties of the surface finish.
Do not attempt to remove these marks. Clean them following the instructions given here.

- Baked-on deposits can be removed with a glass scraper or with a stainless-steel spiral pad, hot water, and liquid dish soap.

You do not need to treat the oven compartment with an oven cleaner as the oven comes with Self Clean.

- If necessary, you can use the scouring pad on the back of a non-scratching dish sponge to remove the soiling after the holding time.
- Remove all cleaning agent residues thoroughly with clean water.
- Dry all surfaces with a soft cloth.

Cleaning the oven compartment with Self Clean

Instead of cleaning the oven compartment by hand, you can run the Self Clean function.

During the Self Clean function, the oven compartment reaches temperatures in excess of 750°F (400°C). Any grime that has accumulated will be broken down and burnt to ash as a result of the high temperatures.

There are 3 Self Clean settings available, each with a different duration:

- level 1 for light soiling
- level 2 for heavier soiling
- level 3 for very heavy soiling

The oven door is automatically locked when the Self Clean process starts. It cannot be opened until after the program has finished.

The timer can be used to delay the start time of the Self Clean program.

At the end of the Self Clean program, any residues such as ash from the cleaning process, which are formed depending on the oven compartment's degree of soiling, can be easily wiped away.

Preparing for Self Clean

Accessories that are not suitable for the Self Clean program will be damaged by the high temperatures.

Remove all accessories that are not suitable for the Self Clean program from the oven compartment before starting the Self Clean process. This also applies for optional accessories that are not suitable for the Self Clean program.

The following accessories are suitable for the Self Clean program and can be left in the oven compartment during the process:

– Side runners
– FlexiClip telescopic runners HFC 72
– Wire rack HBBR 72

■ Remove all accessories that are not suitable for the Self Clean program from the oven.

■ Slide the wire rack into the top shelf level.

Coarse soiling in the oven compartment can cause thick smoke to develop.
Burnt-on residues can cause lasting discoloration or matte spots on enameled surfaces.

Before starting the Self Clean program, remove coarse soiling from the oven compartment and scrape any burnt-on residues off enameled surfaces with a glass scraper.

Starting Self Clean

⚠ Risk of injury caused by hazardous steam.
During the Self Clean program, steam, which can irritate mucous membranes, can be released.
During the Self Clean program, do not stay in the kitchen for longer periods of time and do not let children and pets enter the kitchen.
It is important to ensure that the kitchen is well ventilated during the Self Clean program. Close doors to other rooms to prevent the odor spreading throughout the house.

⚠ Danger of injury caused by hot surfaces.
The oven gets much hotter during the Self Clean program than during normal use.
Do not let children touch the oven during the Self Clean program.

- Select Maintenance ⓪.
- Select Self Clean.
- Select the level required according to the degree of soiling.
- Confirm with *OK*.

Follow the instructions on the display.

- Confirm with *OK*.

You can start the Self Clean program straight away or schedule it to begin at a later time.

Starting Self Clean straight away

- To start the Self Clean program straight away, select Start now.
- Confirm with *OK*.

The Self Clean program will start.

The door will lock automatically. The oven heating and the cooling fan will then turn on automatically.

The oven interior lighting will not come on during the Self Clean program.

The time left for the Self Clean program will start counting down on the display. You cannot alter the duration.

You can use the timer while the Self Clean program is running. When the set time has elapsed, the audible signal will sound and 🔔 will flash. The time will then continue to increase on the display. When you tap the *Timer* sensor button, the audible signal will stop and the symbols on the display will go out.

Starting Self Clean at a later time

- To start the Self Clean program later, select Start at.
- Confirm with *OK*.
- Set the time at which you want the Self Clean program to start.
- Confirm with *OK*.

The door will lock automatically. Start at and the start time set will appear on the display.

You can reset the start time via Timer at any point up to the starting time.

Once the start time has been reached, the oven heating and cooling fan functions will be automatically activated. The remaining time will appear on the display.

Finishing Self Clean

When the remaining time has elapsed, a message will appear on the display to tell you that the door is unlocking.

Ready will appear on the display and an audible signal will sound as soon as the door has been unlocked.

- Confirm the message shown with *OK*.
- Select Close.
- Turn the oven off.

The audible signal will stop and the symbols on the display will go out.

⚠ Danger of injury caused by hot surfaces.
At the end of the Self Clean program, the oven will still be very hot. You could burn yourself on the heater elements, oven compartment, or accessories.
Allow the heater elements, oven compartment, and accessories to cool down before removing any Self Clean residues or oiling the side runners.

- Clean the oven compartment and accessories suitable for the Self Clean program to remove any Self Clean residues (e.g., ash) that can build up depending on the degree of soiling in the oven compartment.
- Add a few drops of heat-resistant cooking oil to some kitchen paper and use this to lubricate the side runners.

Most residues can be removed with warm water, liquid dish soap, and a clean sponge or a clean, damp microfiber cloth.

Depending on the degree of soiling, a visible deposit could build up on the glass on the inside of the oven door. You can remove this using the scouring side of a dish sponge, a glass scraper, or with a stainless steel spiral pad (e.g., Spontex Spirinett) and liquid dish soap.

There is a fiberglass seal around the oven compartment which seals the inside of the glass oven door and can be damaged by rubbing and scouring.
Avoid cleaning the fiberglass seal. The fiberglass seal is essential for sealing the door properly.

Spilled fruit juices may cause lasting discoloration of enameled surfaces. This discoloration is permanent but will not affect the properties of the enamel.
Do not attempt to remove these marks.

Extending and retracting the FlexiClip telescopic runners

After cleaning, discoloration or light patches may remain on the FlexiClip telescopic runners. This will not affect the function of the runners in any way.

■ Extend and retract the FlexiClip telescopic runners several times after running the Self Clean program.

Self Clean interrupted

If the Self Clean program is cancelled, the oven door will remain locked until the temperature inside the oven drops to below 535°F (280°C).

The following events will cause the Self Clean program to stop:

- Turning the oven off.

  If you turn the oven off, Self clean program cancelled will appear on the display.

- A power failure.

  Once the power returns after a power failure, Self clean program cancelled will appear on the display.

The door will unlock once the temperature in the oven has dropped below 535°F (280°C), and the oven is turned off.

Descale

The steam system should be descaled regularly (frequency will depend on the on-site water hardness).

The descaling process can be run at any time.

However, to ensure that the oven functions correctly, you will be automatically prompted to run the descaling process for the steam injection system after a certain number of cooking processes.

The oven will count down on the display the last 10 cooking processes that can be run before it needs to be descaled. You will then not be able to run any operating modes or automatic programs using moisture injection.

These operating modes can only be used again after you have carried out the descaling process. All other operating modes and automatic programs without moisture injection can still be used.

Descaling process sequence

Once the descaling process has been started, it must be completed through to the end. It cannot be canceled.

The descaling process takes approx. 90 minutes and consists of several steps:

1. Preparing for the descaling process
2. Drawing in the descaling agent
3. Activation phase
4. Rinse 1
5. Rinse 2
6. Rinse 3
7. Residual moisture evaporation

Preparing for the descaling process

You will need a container of approx. 4 cups (1 liter) capacity.

A plastic tube (with suction cup) is supplied with your oven so that you do not have to hold the container with the descaling agent underneath the water intake pipe.

We recommend using the descaling tablets supplied. They have been specially developed for Miele for optimum cleaning results.

Tip: Miele descaling tablets are available to order from the Miele web shop, from the Miele Customer Service, or from your Miele dealer.

Other descaling agents, which contain other acids besides citric acid and/or other undesirable substances, such as chlorides, could cause damage.

Moreover, the descaling result required could not be guaranteed if the descaling agent was not of the appropriate concentration.

- Fill the container with approx. 2 1/2 cups (600 ml) of cold tap water and completely dissolve one descaling tablet in it.

Running the descaling process

- Select Maintenance ⓪.
- Select Descale.

If you have already disable the operating modes and MasterChef automatic programs with moisture injection, you can start the descaling process immediately by tapping *OK*.

- Push the universal tray into the top shelf level as far as it will go to collect the descaling agent after it has been used. Confirm the message shown with *OK*.

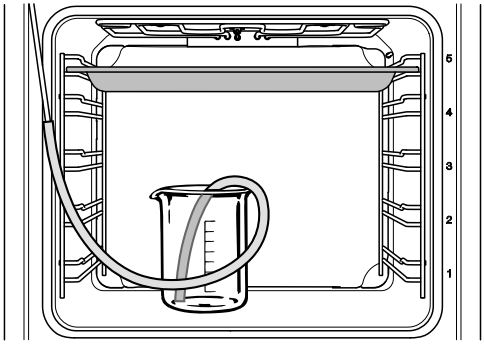

- Place the container with the descaling agent on the floor of the oven.
- Attach one end of the plastic tube to the water intake pipe. Place the other end of the plastic tube in the bottom of the descaling agent container and secure the plastic tube to the container with the suction cup.
- Confirm with *OK*.

The water intake process will begin. You will hear the noise of the pump.

You can interrupt and restart the intake process at any time by selecting Stop or Start.

The amount of descaling agent specified can be more than the amount which is actually taken in. Some of the agent may therefore be left in the container at the end of the descaling process.

A message will appear on the display when the intake process is finished.

- Confirm with *OK*.

The **activation phase** will begin. You can follow the time counting down on the display.

- Leave the container with the tube connected to the water intake pipe in the oven compartment. Top the container up with approx. 1 1/4 cups (300 ml) of water, as the system will need to draw in some more liquid during the activation phase.

The system will take in more liquid at approximately 5-minute intervals. You will hear the noise of the pump.

The oven interior lighting and cooling fan will remain turned on for the entire duration of the process.

An audible signal will sound at the end of the activation phase.

Rinsing the steam injection system after the activation phase

At the end of the activation phase, the steam injection system will need to be rinsed out to remove all traces of descaling agent.

To do this, approx. 4 cups (1 liter) of fresh tap water is pumped through the steam injection system three times and is collected in the universal tray.

- Take the universal tray with the collected descaling agent out of the oven and empty it. Place the tray back in the oven again on the top shelf level.
- Remove the plastic tube from the container.
- Remove the container, rinse it out thoroughly, and fill it with approx. 4 cups (1 liter) of fresh tap water.
- Place the container back in the oven, insert the plastic tube, secure it to the container, and close the door.
- Confirm with *OK*.

The intake process for the **first rinse** will start.

Water will be flushed through the steam injection system and will then collect in the universal tray.

Messages will appear on the display to prepare for the **second rinse**.

- Take the universal tray out of the oven and empty it. Place the tray back in the oven again on the top shelf level.
- Remove the plastic tube from the container. Fill it with approx. 4 cups (1 liter) of fresh tap water.
- Place the container back in the oven, insert the plastic tube, and secure it to the container.
- Confirm with *OK*.
- Do the same for the **third rinse**.

Leave the universal tray (with the water which has collected in it from the third rinse) on the top oven shelf while the evaporation process takes place.

Residual moisture evaporation

After the third rinse, the residual moisture evaporation process will begin.

- Remove the container and tube from the oven.
- Close the door.
- Confirm with *OK*.

⚠ Risk of injury caused by steam.
Steam can cause severe scalding.
Do not open the door while the residual water is being evaporated.

The oven heating will turn on and the duration of the evaporation process will count down on the display.

During the evaporation process, the duration may be adjusted by the system according to how much water is currently present.

Finishing the descaling process

At the end of residual moisture evaporation process, an information window will appear with tips on cleaning after the descaling process.

- Confirm with *OK*.

An audible signal will sound and Ready will appear.

- Select Close.
- Turn the oven off with the ⏻ On/Off button.

⚠ Risk of injury caused by hot surfaces.
The oven gets hot during operation. You could burn yourself on the heating elements, oven compartment, or accessories.
Allow the heating elements, oven compartment, and accessories to cool before manual cleaning.

- Remove the universal tray with the collected fluid and empty it.
- When the oven compartment has cooled down, clean away any condensation and descaling agent residues.
- Leave the oven door open until the oven compartment is completely dry.

Removing the door

The door weighs approx. 24 lbs (11 kg).

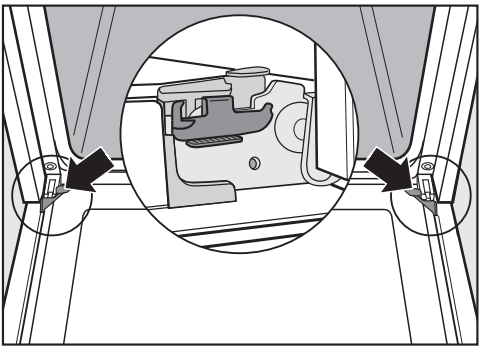

The oven door is connected to the hinges by retainers.
Before removing the door from the retainers, the locking clamps on both hinges have to be released.

- Open the door fully.

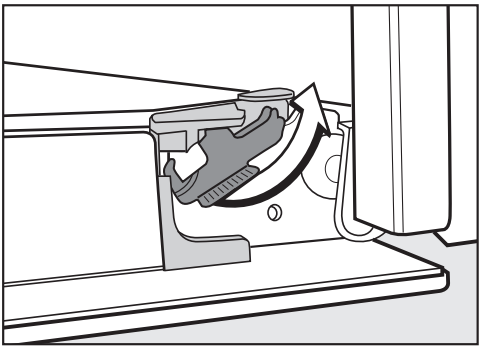

- Release the locking clamps by turning them as far as they will go.

> You could damage the oven if you remove the door incorrectly.
>
> Do not pull the door horizontally off its retainers, as they will spring back against the oven.
>
> Do not pull the door off the retainers by the handle, as the handle could break off.

- Raise the door up till it rests partially open.

- Hold the door on either side and pull it upwards off the hinge retainers. Make sure that the door is straight.

Installing the door

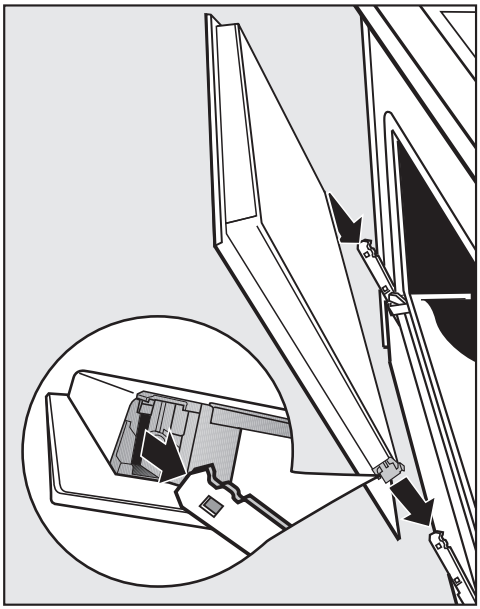

- Hold the door securely on both sides and carefully install it back into the hinge retainers.
  Make sure that you do not tilt the door.
- Open the door fully.

If the locking clamps are not locked, the door could become loose, resulting in damage.

Ensure that the locking clamps are locked after reinstalling the door.

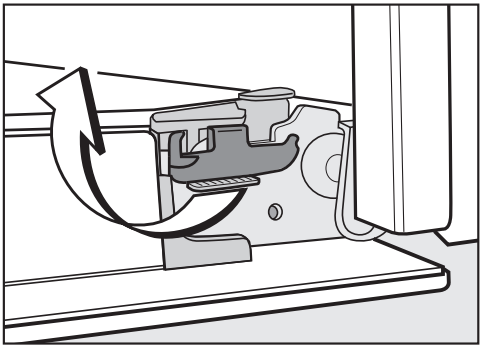

- To relock the locking clamps, turn them back up to the horizontal position as far as they will go.

Removing the side runners with FlexiClip telescopic runners

You can remove the side runners together with the FlexiClip telescopic runners (if present).

If you wish to remove the FlexiClip telescopic runners separately beforehand, please follow the instructions in “Features – Installing and removing the FlexiClip telescopic runners”.

⚠ Risk of injury caused by hot surfaces.

The oven gets hot during operation. You could burn yourself on the heating elements, oven compartment, or accessories.

Allow the heating elements, oven compartment, and accessories to cool before removing the side runners.

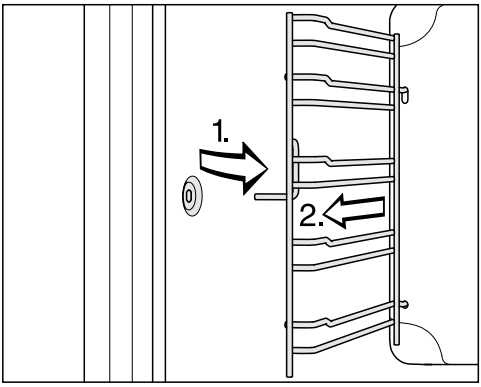

- Pull the side runners out of the holder (1.) and remove them (2.).

Reinstall by following these instructions in reverse order.

- Insert the components carefully.

Lowering the browning/broiling element

If the ceiling of the oven is badly soiled, the browning/broiling element can be lowered to make cleaning easier. Clean the ceiling of the oven regularly with a damp cloth or a dish sponge.

⚠ Risk of injury caused by hot surfaces.
The oven gets hot during operation. You could burn yourself on the heating elements, oven compartment, or accessories.
Allow the heating elements, oven compartment, and accessories to cool before manual cleaning.

You may damage the enamel on the oven floor if you drop fastening nuts on it.
Place a cloth or similar item over the oven floor to protect it.

- Remove the side runners.

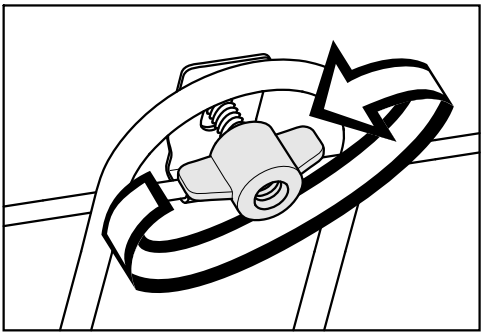

- Unscrew the wing nut.

Take care not to damage the browning/broiling element.
Do not use force when lowering the browning/broiling element.

- Carefully lower the browning/broiling element.

You can now access the ceiling of the oven.

- Clean the ceiling of the oven with hot water and liquid dish soap, applied with a clean sponge cloth or a clean, damp microfiber cloth.
- After cleaning, raise the browning/broiling element gently back up again.
- Replace the wing nut and tighten it securely.
- Reinsert the side runners.

Many malfunctions and faults that can occur in daily operation can be easily remedied. You can save time and money in many cases, as you do not need to contact Miele Customer Service.

Information to help you rectify faults yourself can be found at www.miele.com/service.

The following tables are designed to help you to find the cause of a malfunction or fault and resolve it.

Problem	Possible cause and solution
The display is dark.	You have selected the Time | Display | Off setting. When the oven is turned off, the time-of-day display is dark. ■ As soon as the oven is turned on, the main menu will appear. If you want the time of day to be displayed constantly, select the Time | Display | On setting.
	There is no power to the oven. ■ Check that the oven's electrical plug is correctly inserted in the socket and that the circuit breaker has been switched to on. ■ Check if the breaker has tripped. If it has, contact a qualified electrician or Miele Customer Service.
The audible signal does not sound.	The audible signals are deactivated or set at too low a volume. ■ Turn on the audible signals or increase the volume with Settings | Volume | Buzzer tones.
The oven does not heat up.	Demo mode is activated. You can select menu options on the display and sensor buttons, but the oven heating does not work. ■ Deactivate Demo mode by selecting Settings | Showroom Program | Demo Mode | Off.
The Remote sensor control flashes when you switch on the oven.	You have not yet connected your oven to a Wi-Fi network. The sensor control flashes to tell you that you can easily network the oven using this control. The sensor control will stop flashing once the oven has been switched on and off multiple times, but the networking function will remain active.

Problem	Possible cause and solution
The sensor buttons or the proximity sensor do not respond.	You have selected the Display | QuickTouch | Off setting. When this is activated, the sensor buttons and proximity sensor do not respond when the oven is turned off. ■ As soon as the oven is turned on, the sensor buttons and the proximity sensor will respond. If you want the sensor buttons and the proximity sensor to respond even when the oven is turned off, select the Display | QuickTouch | On setting.
	The settings for the proximity sensor are turned off. ■ Change the settings for the proximity sensor by selecting Settings | MotionReact.
	The proximity sensor is defective. ■ Contact Miele Customer Service.
	The oven is not connected to the domestic electrical supply. ■ Make sure that the plug is correctly inserted in the socket and that the socket switch has been switched to on. ■ Check if the breaker has tripped. If it has, contact a qualified electrician or Miele Customer Service.
	If the display does not respond, there is a fault with the controls. ■ Touch and hold the ⏻ On/Off button until the display turns off and the oven restarts.
System Lock 🔒 **appears on the display when the oven is turned on.**	The 🔒 system lock is activated. ■ You can deactivate the system lock for a cooking program by touching the 🔒 symbol for at least 6 seconds. ■ If you want to permanently deactivate the system lock, select the Safety | System Lock 🔒 | Off setting.
Power failure -program cancelled **appears on the display.**	There has been a brief power failure. This has caused the current cooking process to stop. ■ Turn the oven off and then back on again. ■ Restart the cooking process.
12:00 **appears on the display.**	There was a power failure for more than 150 hours. ■ Reset the date and time.

Problem	Possible cause and solution
Maximum operating duration reached **appears on the display.**	The oven has been operating for an unusually long time. This has triggered the safety shut-off. ■ Confirm with *OK*. The oven is now ready to use again.
⚠ Fault **F32 appears on the display.**	The door lock for the Self Clean program has not locked. ■ Turn the oven off and then back on again. Start the Self Clean program again. ■ If the message appears again, contact Miele Customer Service.
⚠ Fault **F33 appears on the display.**	The door lock for the Self Clean program has not opened. ■ Turn the oven off and then back on again. ■ If the door lock still does not deactivate itself, contact Miele Customer Service.
Fault **and a fault code not listed here appear on the display.**	A fault has occurred that you cannot resolve. ■ Contact Miele Customer Service.
Function currently not available **appears on the display after you have selected the Descale function.**	The steam injection system is faulty. ■ Contact Miele Customer Service.
Fault with moisture control -Automatic Programs will operate without moisture **appears on the display after you have selected a automatic program.**	The steam injection system is faulty. ■ Contact Miele Customer Service. Automatic programs can be run without using moisture injection.
Programs using moisture injection will not take in water.	Demo mode is activated. You can select menu options on the display and sensor buttons, but the steam injection system pump will not work. ■ Deactivate Demo mode by selecting Settings | Showroom Program | Demo Mode | Off.
	The pump for the steam injection system is faulty. ■ Contact Miele Customer Service.
You can hear a noise after a cooking program.	The cooling fan remains turned on after a cooking program (see “Settings – Cooling fan run-on”).

Frequently asked questions

Problem	Possible cause and solution
The oven has turned itself off.	To save power, the oven turns off automatically if a button is not pressed after a certain amount of time or after a cooking program has ended. ■ Turn the oven back on.
The cake/cookies are not baked properly.	A different temperature than that given in the recipe was used. ■ Select the temperature required for the recipe.
	The ingredient quantities are different from those given in the recipe. ■ Check if you have amended the recipe. The addition of more liquid or more eggs will make a wetter mixture which will take longer to cook.
The browning is uneven.	You selected the wrong temperature or shelf level. ■ There will always be a slight unevenness. If browning is very uneven, check whether you selected the correct temperature and shelf level.
	The material or color of the bakeware is not suitable for the operating mode selected. ■ When using the Surround operating mode, light-colored, shiny baking pans will not produce as desirable results. Dark, matte baking pans are best for baking.
There is still soiling in the oven compartment after a Self Clean program.	The Self Clean program burns off soiling in the oven and leaves it as ash. ■ Remove the ash with warm water, liquid dish soap, and a clean sponge or a clean, damp microfiber cloth. If there is still coarse soiling left in the oven after the Self Clean program, you should start the program again, selecting a longer duration if necessary.
The accessories make noises when they are pushed into or pulled out of the oven.	The Self-Clean-resistant surface of the side runners creates friction when accessories are pushed into or pulled out of the oven. ■ To reduce the friction, add a few drops of heat-resistant cooking oil to some kitchen paper and use this to lubricate the side runners. Repeat this after every Self Clean program.

Problem	Possible cause and solution
The oven interior lighting turns off after a short time.	You have selected the Lighting | "On" for 15 seconds setting. ■ If you want the oven interior lighting to remain on during the entire cooking program, select the Lighting | On setting.
The oven interior lighting is off or does not turn on.	You have selected the Lighting | Off setting. ■ Press the *Light* sensor button to turn the oven interior lighting on for 15 seconds. ■ If required, select the Lighting | On or "On" for 15 seconds setting.
	The oven interior lighting is faulty. ■ Contact Miele Customer Service.
The oven interior lighting does not turn on. 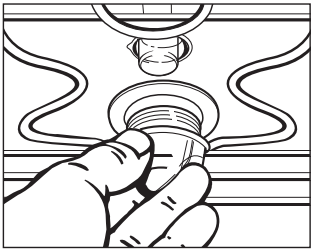	The halogen lamp is faulty. ⚠ Risk of injury caused by hot surfaces. The oven gets hot during operation. You could burn yourself on the heating elements, oven compartment, or accessories. Allow the heating elements, oven compartment, and accessories to cool before manual cleaning. ■ Disconnect the oven from the electrical supply. Unplug the appliance or switch off the breaker. ■ Turn the bulb cover a quarter turn counterclockwise to release it and then pull it together with its seal downward to take it out. ■ Replace the halogen bulb (Osram 66725 AM/A, 230 V, 25 W, G9). ■ Reinstall the bulb cover together with its seal and turn it clockwise to secure. ■ Reconnect the oven to the electrical supply.

Information to help you rectify faults yourself and about Miele spare parts can be found at www.miele.com/service.

Contact in the event of a fault

In the event of a fault which you cannot remedy yourself, please contact your Miele dealer or Miele Customer Service.

You can book a Miele Service Call online at www.miele.com/service.

Contact information for Miele Customer Service can be found at the end of this document.

Please quote the model identifier and serial number of your appliance (SN) when contacting Miele Customer Service. Both pieces of information can be found on the data plate.

This information is given on the data plate, which is visible on the front frame of the oven when the door is fully open.

Appliance warranty and product registration

You can register your product and/or view the manufacturer´s warranty terms and conditions for Miele appliances and vacuum cleaners at www.mieleusa.com.

Disposal of the packing material

The cardboard box and packing materials protect the appliance during shipping.

Ensure that any plastic wrappings, bags, etc. are disposed of safely and kept out of the reach of children. Danger of suffocation!

Disposal of your old appliance

Electrical and electronic appliances contain valuable materials. They also contain certain substances, compounds and components which were essential for the proper functioning and safe use of the equipment. Handling these materials improperly by disposing of them in your household waste can be harmful to your health and the environment. Therefore, please do not dispose of your old appliance with regular household waste and follow local regulations on proper disposal.

Consult with local authorities, dealers or Miele in order to dispose of and recycle electrical and electronic appliances. Miele assumes no responsibility for deleting any personal data left on the appliance being disposed. Please ensure that your old appliance is kept away from children until removal. Observe safety requirements for appliances that may tip over or pose an entrapment hazard.

Installation dimensions

Installation in a tall or base cabinet (30" niche with trim kit EBA 7xxx)

Miele Ovens can be installed flush or proud. Discuss your requirements with your architect, kitchen designer, and installer.

More installation drawings are available on the Miele website.

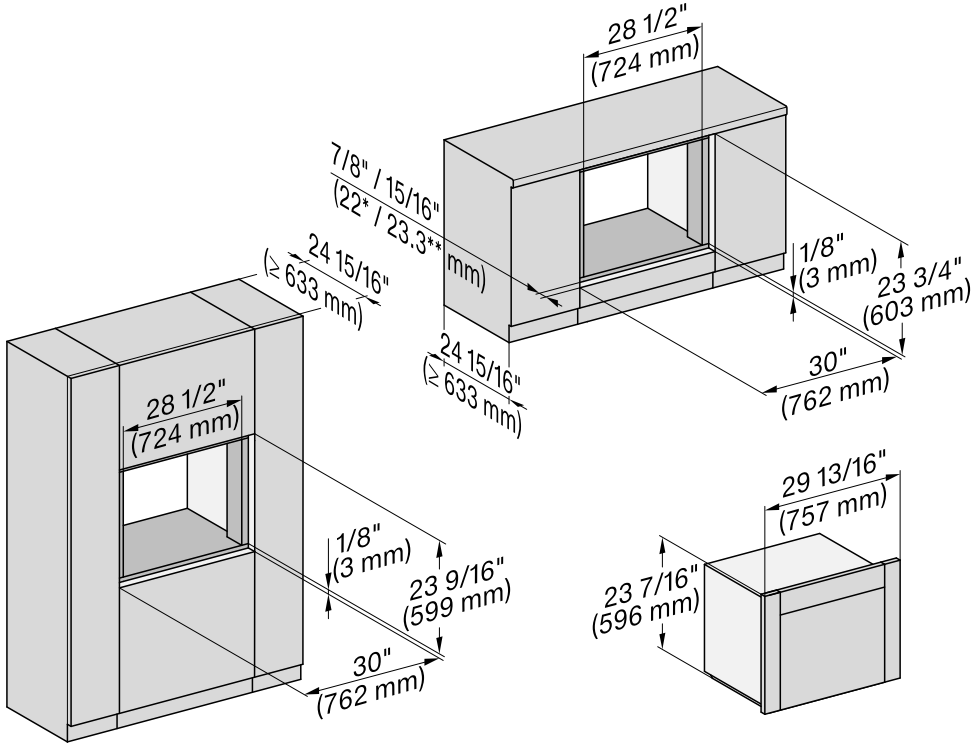

* Oven with glass front

** Oven with metal front

Installation in a tall or base cabinet (24" niche)

Miele Ovens can be installed flush or proud. Discuss your requirements with your architect, kitchen designer, and installer.

More installation drawings are available on the Miele website.

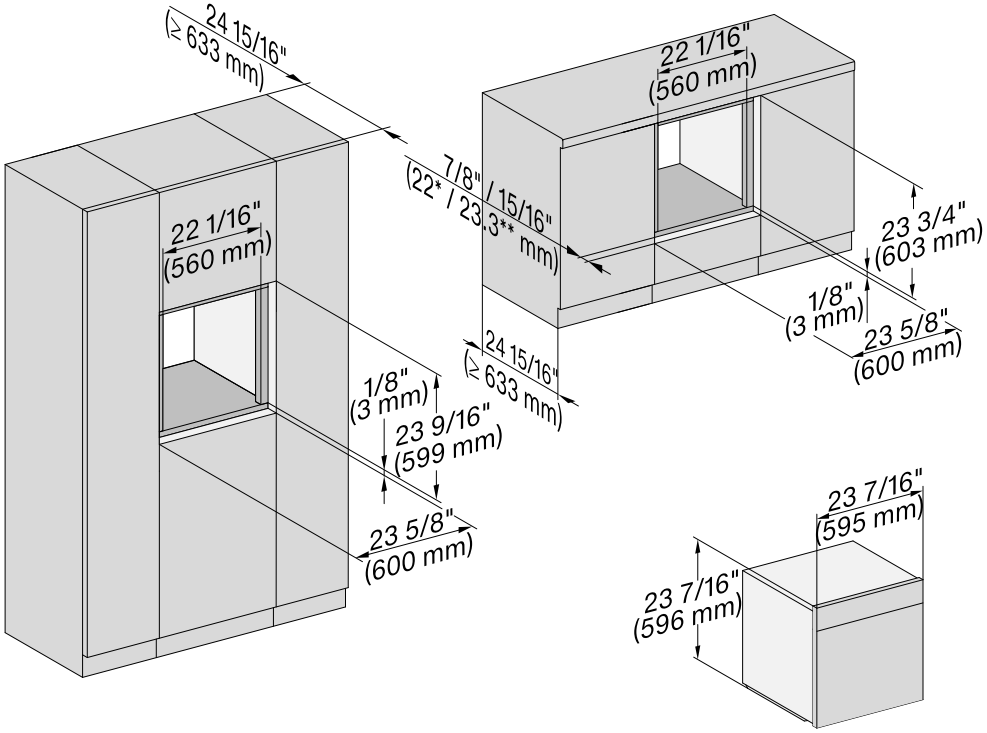

* Oven with glass front

** Oven with metal front

Side view

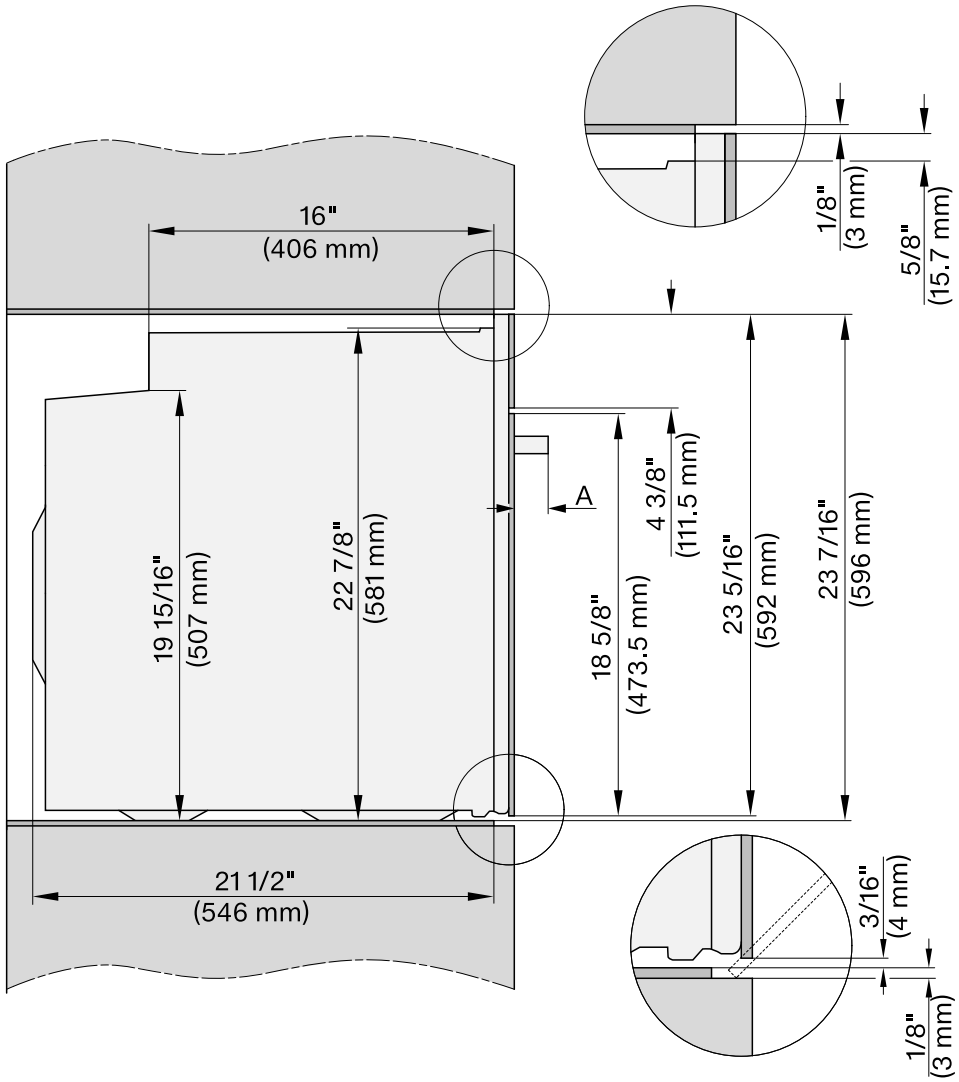

A H 76xx: 1 7/8" (47 mm)

Connections and ventilation

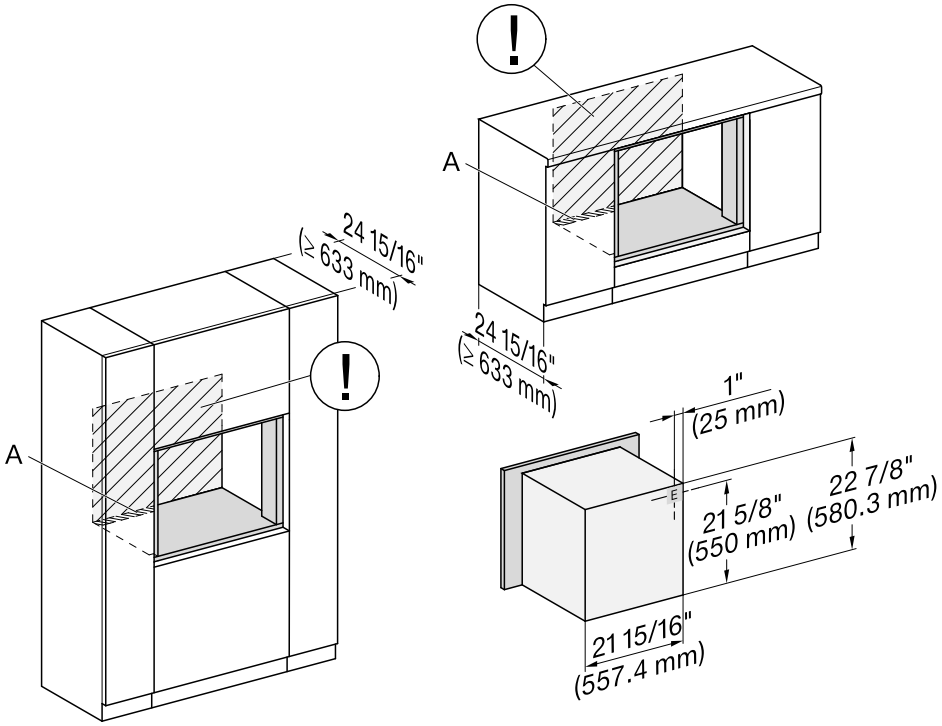

A Cutout 4" x 28 3/8" (100 mm x 720 mm) in the base of the kitchen cabinet for power cord and ventilation

ⓘ The outlet for the electrical connection should be accessible, e.g., in an adjacent kitchen cabinet. If the electrical connection is behind the oven, the kitchen cabinet needs to be deeper than specified.

E Electrical connection

Installing and removing the oven

For safety reasons, only use the oven when it has been fully installed.

The oven requires a sufficient supply of cool air for efficient operation. The required supply of cool air must not be excessively heated by other heat sources (e.g., wood burning stoves).

The following must be observed when installing the appliance:
Make sure that the shelf that the oven sits on does not touch the wall.
Do not install heat insulation strips on the side walls of the cabinet carcase.

Do not open the door when the oven is on the floor. This could damage the door.
Do not open the door until the oven has been installed inside the housing unit.

Securing the oven in the cabinet niche

- Connect the oven to the power supply.

Do not carry the oven by the door handle. This could damage the door.
Use the handles on each side of the housing to carry the appliance.

It is a good idea to remove the door (see “Cleaning and care of the oven – Removing the door”) and the accessories before installing the appliance. The oven is then easier to push into the cabinet carcase and you do not run the risk of lifting it by the door handle.

- Push the oven into the cabinet niche and align it in the center of the cabinet niche.
- Open the door if you have not removed it.

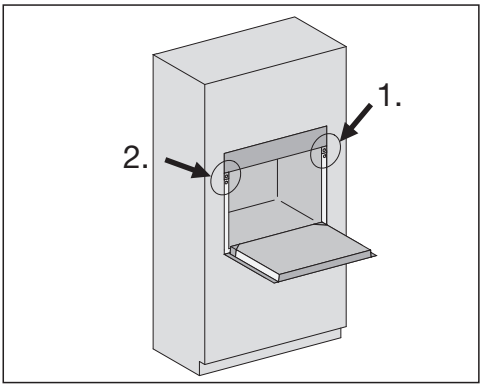

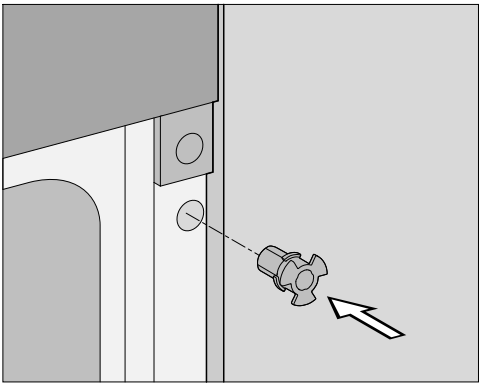

- Insert the mounting aid into the hole in the front frame.

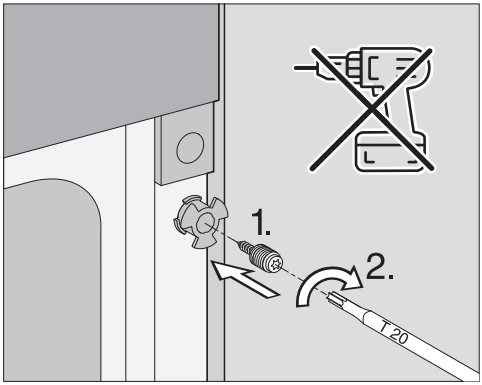

■ Insert the bolt into the mounting aid and tighten it in the cabinet niche. **Do not** use a cordless screwdriver.

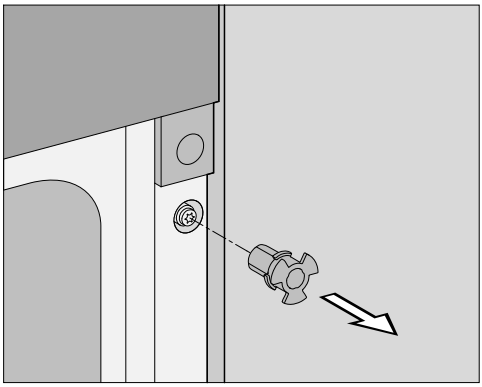

■ Remove the mounting aid.

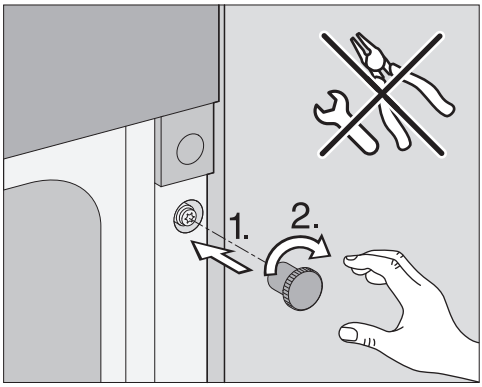

■ Screw the knurled nut onto the bolt by hand to fix the oven in the cabinet niche.

The door may be damaged if the knurled nuts protrude from the front frame.
Make sure that the knurled nuts are flush with the front frame after installation.

■ Repeat this process for the other side.

Reinstall the door, if necessary (see “Cleaning and care of the oven – Installing the door”).

Taking the oven out of the housing unit

■ Open the door.

■ Unscrew the knurled nuts and bolts from the front frame (see “Securing the oven in the housing unit”).
Keep these parts in case the oven needs to be installed again in the future.

■ Pull the oven out of the housing unit.

Do not carry the oven by the door handle. This could damage the door.
Use the recessed grips on each side of the housing to carry the appliance.

■ Take the oven out of the housing unit.

■ Disconnect the oven from the power supply.

Electrical connection

⚠ Risk of injury due to electric shock.
During installation, maintenance, and repair work, the oven must be completely disconnected from the power supply:
Disconnect the oven from the power supply by tripping the breakers, or unplugging the power cord from the outlet. To do this, pull the plug not the cord.

⚠ Risk of injury.
Installation, repairs, and other work by unqualified persons could be dangerous. Miele cannot be held liable for unauthorized work.
Installation, maintenance, and repairs must only be carried out by a Miele authorized technician.

The connection data (voltage and frequency) on the data plate of the oven must match the power supply in order to avoid the risk of damage to the oven.
Compare this before connecting the appliance to the power supply. If in any doubt, consult a qualified electrician.

For safety reasons, the oven may only be used when it has been fully installed.

The power cord plug must be inserted into a suitable outlet that has been installed and grounded in compliance with all applicable local codes.

WARNING: THIS APPLIANCE MUST BE GROUNDED

Installer: Please pass these instructions on to the customer.

Electrical connection

The oven is equipped with a power cord approx. 6 ft (1.8 m) long with a 4-pin NEMA 14-30P plug for connection to a power supply with:

- 2NAC 208 V, 30 A, 60 Hz

  or

- 2NAC 240 V, 30 A, 60 Hz

Temporary or permanent operation on an autonomous power supply system or a power supply system that is not synchronized with the grid power supply (e.g., island networks, back-up systems) is possible. A prerequisite for operation is that the power supply system complies with the specifications of EN 50160 or an equivalent standard. The function and operation of the protective measures provided in the domestic electrical installation and in this Miele product must also be maintained in isolated operation or in operation that is not synchronized with the grid power supply, or these measures must be replaced by equivalent measures in the installation. As described, for example, in the current version of VDE-AR-E 2510-2.

You can set the voltage variant (see “Settings – Electrical version”).

KEEP THE OPERATING AND INSTALLATION INSTRUCTIONS IN A SAFE PLACE.

Electrical connection

⚠ WARNING:
During installation, maintenance, and repair work, the oven must be disconnected from the domestic electrical supply by fully unscrewing the breakers and switching off the breakers.

Installation, repairs, and other work by unqualified persons could be dangerous. Miele cannot be held liable for unauthorized work. Installation, maintenance, and repairs must only be carried out by a Miele authorized technician.

The connection data (voltage and frequency) on the data plate of the oven must match the domestic electrical supply in order to avoid the risk of damage to the oven.
Compare this data before connecting the appliance. If in any doubt, consult a qualified electrician.

For safety reasons, the oven may only be used when it has been fully installed.

WARNING: THIS APPLIANCE MUST BE GROUNDED

Installer: Please pass these instructions on to the customer.

Declaration of conformity

Radio Module

This device contains the following WiFi module:

FCC ID	2AC7Z-EK057
IC ID	21098-EK057
Frequency band	2.412 GHz – 2.462 GHz
Maximum transmitting power	< 0.2 W

Compliance Statement

This device complies with Part 15 of the FCC Rules and contains licence-exempt transmitter(s)/receiver(s) that comply with Innovation, Science and Economic Development Canada's licence-exempt RSS Standard(s).
Operation is subject to the following two conditions:
(1) this device may not cause harmful interference, and
(2) this device must accept any interference received, including interference that may cause undesired operation.

The construction of the device assures that the FCC/IC exposure limits are verifiably met using the integrated radio module.

⚠ Warning!
Any changes or modifications to this unit not expressly approved by the party responsible for compliance could void the user's authority to operate the equipment.

Copyrights and licenses

Miele uses their own and third party software which is not subject to any so-called open source license for the operation and control of the device/appliance. This software/these software components are protected by copyright. The copyright powers of Miele and third parties have to be respected.

Furthermore, this device/appliance contains software components which are distributed under open source license conditions. Please refer to Settings | Legal information | Open source licenses in the device/appliance for the open source components contained therein, together with the corresponding copyright notices, copies of the licensing conditions valid at the time, and any further information. The liability and warranty provisions of the open source licensing conditions as stated therein apply only in relation to the respective rights holders.

In particular, the device/appliance contains software components licensed by the copyright holders under the GNU General Public License, Version 2, or the GNU Lesser General Public License, Version 2.1. For a period of at least 3 years from the date of purchase or delivery of the device/appliance respectively, Miele offers to provide you or third parties with a machine-readable copy of the source code of the Open Source components contained in the device/appliance and licensed under the terms of the GNU General Public License, Version 2, or the GNU Lesser General Public License, Version 2.1, on a data carrier (CD-ROM, DVD or USB stick). Please contact us via e-mail (info@miele.com) or the below postal address and state the product name, the serial number and the date of purchase to obtain this source code.

Miele & Cie. KG
Open Source
GTZ/TIM
Carl-Miele-Straße 29
33332 Gütersloh

Please note the limited warranty in favor of the rights holders under the terms of the GNU General Public License, Version 2, and the GNU Lesser General Public License, Version 2.1:

This program is distributed in the hope that it will be useful, but WITHOUT ANY WARRANTY, without even the implied warranty of MERCHANTABILITY of FITNESS FOR A PARTICULAR PURPOSE. See the GNU General Public License and GNU Lesser General Public License for more details.

Copyrights and licenses for the communication module

For the purpose of operating and controlling the communication module, Miele uses proprietary or third-party software that is not covered by open source licensing terms. This software/ these software components are protected by copyright. The copyrights held by Miele and third parties must be respected.

This communication module contains software components which are distributed under open source license conditions. The open source components contained in the appliance along with the corresponding copyright notices, copies of the licensing terms valid at the time, and any additional information can be accessed locally via *http://<IP address>/Licenses*. The liability and warranty arrangements for the open source licenses displayed in this location only apply in relation to the respective rights holders.

Please have the model and serial number of your appliance available when contacting Customer Service.

U.S.A.

Miele, Inc.

National Headquarters
9 Independence Way
Princeton, NJ 08540
www.mieleusa.com

Customer Support
Phone: 888-99-MIELE (64353)
info@mieleusa.com

Canada

Importer
Miele Limited

Headquarters and Miele Centre
161 Four Valley Drive
Vaughan, ON L4K 4V8
www.miele.ca

Customer Care Centre
Phone: 1-800-565-6435
905-532-2272
contact@miele-support.ca

International Headquarters
Miele & Cie. KG
Carl-Miele-Straße 29
33332 Gütersloh
Germany

Miele

H 7660 BP

en-US, CA

M.-Nr. 11 900 011 / 00