Miele

Operating instructions
Dishwasher

Always read the operating instructions and the installation sheet before setting up, installing, and commissioning the appliance. This prevents both personal injury and damage to the machine.

en-CA HG07 M.-Nr. 11 694 152

Contents

Warnings and safety instructions **6**

Notes on the operating instructions **16**
Notes on the layout 16

Items included **17**

Guide to the appliance **18**
Machine overview 18
Control field 19

Caring for the environment **20**

Initial commissioning **21**
Opening the door 21
Closing the door 22
Activating the child lock 22
Water softener 23
Displaying and setting the water hardness level 24
Reactivation salt 25
Filling the salt reservoir 26
Refilling the salt 27
Rinse aid 28
Adding rinse aid 29
Filling the rinse aid reservoir 29

Caring for the environment **31**
Energy-saving dishwashing 31

Loading the dishwasher **32**
General information 32
Loading examples 34
Upper basket 36
Adjusting the upper basket 38
Lower basket 39
Cutlery tray / cutlery basket (depending on model) 40
Loading the 3D MultiFlex Tray 40
Loading the cutlery basket 41

Detergent **42**
Active ingredients 42
Detergent dispensing 43
Adding detergent 44

Operation **45**
Turning on the dishwasher 45

Contents

Selecting a program 45
Display of program cycle time 46
Starting a program 46
End of program 47
Energy management 47
Turning off the dishwasher 48
Unloading the dishwasher 48
Interrupting a program 49
Cancelling or changing a program 49

Options **50**
Timer 50

Program overview **52**

Program options **54**
Express 54
AutoOpen 55
Turning off the refill reminders 56
Extra clean 57
Extra Dry 58
Second interim rinse 59
Factory default settings 60

Cleaning and care **61**
Cleaning the wash cabinet 61
Cleaning the door and the door seal 62
Cleaning the control field 62
Cleaning the appliance front 62
Cleaning the spray arms 63
Checking the filters in the wash cabinet 67
Cleaning the filters 67
Cleaning the drain pump 69

Problem solving guide **71**
Technical problems 71
Fault messages 72
Door release 73
Water intake fault 74
Water drainage fault 75
General dishwasher problems 76
Noises 77
Poor cleaning results 78

Contents

Technical Service **81**
Contact in the event of a fault 81
Warranty 81

Optional accessories **82**

Installation **84**
Water inlet 84
Water drainage 86
Electrical connection 88

Sound emission testing **90**

Warnings and safety instructions

This dishwasher complies with all current local and national safety requirements. Inappropriate use can, however, lead to personal injury and material damage.

Please observe the installation sheet and read the operating instructions carefully before setting up the dishwasher and using it for the first time. They both contain important information on the installation, safety, use, and maintenance of the machine. This prevents both personal injury and damage to the dishwasher.

In accordance with standard IEC 60335-1, Miele expressly and strongly advises that you read and follow the instructions in the section on installing the dishwasher as well as the safety instructions and warnings.
Miele cannot be held liable for injury or damage caused by non-compliance with these instructions.

Keep the installation sheet and the operating instructions in a safe place and pass them on to any future owner.

Correct application

▶ This dishwasher is intended for use in the home and in similar environments, for example
– in shops, offices, and similar work settings
– on agricultural estates
– by guests in hotels, motels, bed and breakfasts, and other typical home settings.

▶ This dishwasher is not suitable for outdoor use.

▶ This dishwasher is intended for use at altitudes of up to 4,000 m above sea level.

▶ This dishwasher must only be used for cleaning domestic dishware and cutlery. All other types of use are not permitted.

▶ This dishwasher is not intended for use by people with reduced physical, sensory, or mental capabilities or lack of experience and knowledge, unless they have been given supervision and instruction concerning its use by a person responsible for their safety. They may only use the dishwasher without supervision if they have been shown how to use it in a safe manner. They must be able to recognize and understand the possible consequences of incorrect operation.

Safety with children

▶ Children under 8 years of age must be kept away from the dishwasher unless they are constantly supervised.

▶ Children aged 8 and older may only use the dishwasher without supervision if they have been shown how to use it in a safe manner. Children must be able to understand and recognize the possible dangers caused by incorrect operation.

▶ Children must not be allowed to clean or maintain the appliance.

▶ Children should be supervised in the vicinity of the dishwasher. Never allow children to play with the dishwasher. There is a danger that children might shut themselves in the dishwasher.

▶ If the automatic door opening mechanism is active (depending on the model), keep young children away from the area in which the dishwasher door opens. There is a danger of injury in the unlikely event of a fault with the opening mechanism.

▶ Danger of suffocation. While playing, children may become entangled in packaging material (such as plastic wrapping) or pull it over their head, presenting the risk of suffocation. Keep packaging material away from children.

▶ Keep children away from detergents. Detergents cause severe skin burns and severe eye damage. They can cause burning in the mouth and throat, or inhibit breathing. It is therefore important to keep children away from the dishwasher when the door is open. Detergent residues could still be present in the machine. Seek medical advice immediately if a child has swallowed or inhaled any detergents.

Technical safety

▶ Unauthorized installation, maintenance, and repairs can cause considerable danger for the user. Installation, maintenance, and repairs must only be carried out by a qualified technician.

▶ Damage to the dishwasher can compromise your safety. Before using the dishwasher and in particular following transport, check it for any visible damage. Never use a damaged dishwasher.

▶ The electrical safety of the dishwasher can only be guaranteed when correctly grounded. It is most important that this basic safety requirement is fulfilled. If in doubt, the electrical installation should be checked by a qualified electrician.
Miele cannot be held liable for the consequences of an inadequate or lack of grounding system (e.g., electric shock).

▶ Temporary or permanent operation on an autonomous power supply system or a power supply system that is not synchronized with the grid power supply (e.g., island networks, back-up systems) is possible. A prerequisite for operation is that the power supply system complies with the specifications of EN 50160 or an equivalent local standard.
The function and operation of the protective measures provided in the domestic electrical installation and in this Miele product must also be maintained in isolated operation or in operation that is not synchronized with the grid power supply, or these measures must be replaced by equivalent measures in the installation. As described, for example, in the current version of VDE-AR-E 2510-2 or an equivalent local standard.

▶ If the dishwasher is plugged into the domestic electricity supply using a 3-pin plug with a grounding contact (it must not be hard-wired), the electrical socket must be easily accessible after the dishwasher is installed so that it can be disconnected from the domestic electricity supply at any time.

▶ There must be no electrical sockets behind the dishwasher because the building-in niche may be too small. Danger of overheating and fire risk if the dishwasher were to be pushed up against a plug.

▶ The dishwasher must not be installed underneath a cooktop. The high temperatures radiated by cooktops could damage the dishwasher below. For the same reason, the dishwasher must not be installed next to open fires or other appliances that give off heat, such as heaters etc., not normally found in a kitchen.

▶ Ensure that the connection data on the dishwasher's data plate (fuse rating, frequency, and voltage) match the domestic electricity supply. This data must correspond in order to avoid the risk of damage to the dishwasher. Compare these before connecting the appliance to the electricity supply. If in any doubt, consult a qualified electrician.

▶ Do not connect the dishwasher to the domestic electricity supply until it has been fully installed and any adjustments have been made to the door springs.

▶ The dishwasher may only be operated if the door opening mechanism is working correctly. Otherwise there could be a risk of danger while the automatic door opening mechanism (depending on the model) is active.
To check that the door opening mechanism is working correctly:

- The door springs must be evenly adjusted on both sides. They are correctly adjusted when the door remains stationary when left half open (approx. 45° opening angle). It is also important that the door cannot fall open.
- The door locking pins automatically retract when the door opens at the end of the drying phase.

▶ Multi-socket adapters and extension leads do not guarantee the required safety of the appliance (risk of fire). Do not connect the dishwasher to the domestic electricity supply using a power bar or an extension cord.

▶ The dishwasher must not be used in a non-stationary location (e.g., on a ship).

▶ Do not install the dishwasher in a room where there is a risk of frost. Frozen hoses are at risk of tearing or bursting. The reliability of the electronic control unit may be impaired at temperatures below freezing point.

▶ To avoid any damage to the dishwasher, it must only be operated when it is connected to a fully vented plumbing system.

▶ The built-in Miele Waterproof system offers reliable protection against water damage if the following conditions are met:

- Installation has been carried out correctly.
- The dishwasher is properly maintained and parts are replaced in case of noticeable damage.
- The water supply faucet is turned off during longer absences from the home (e.g., while on vacation).

The Waterproof system will work even when the dishwasher is switched off. However, the dishwasher must remain connected to the domestic electrical supply.

▶ The water-connection pressure needs to be between 50 and 1,000 kPa.

▶ A damaged dishwasher could be dangerous. If the dishwasher gets damaged, turn it off at the electricity supply immediately and contact your Miele dealer or Miele Service.

▶ The manufacturer's warranty will be invalidated if the appliance is not repaired by a Miele authorized service technician.

▶ We recommend replacing defective components with original spare parts. If original Miele spare parts are installed correctly, Miele ensures full compliance with safety requirements and the warranty remains valid.

▶ During installation, maintenance, and repair work, the dishwasher must be disconnected from the domestic electricity supply (turn it off and withdraw the plug from the socket).

▶ If the power cable is damaged, it must only be replaced with a specific cable of the same type (available from Miele Service). For safety reasons, this must only be done by Miele Service or a service technician authorized by Miele.

▶ Do not place the dishwasher on the water inlet hose. The water inlet hose must be free of kinks and able to move freely after installation.
Do not install the water inlet hose or the power cord next to a heat source, such as a hot water pipe.
Do not expose the water inlet hose or the power cord to household cleaners, vapours or other corrosive substances (such as chloride). Damage to the power cord or water inlet hose can lead to electric shocks or water damage.
Check the water inlet hose or the power cord for leaks and damage after installation and every 6 months thereafter. Have the water inlet hose or the power cord replaced if there are signs of damage.
The same applies to the drain hose.

Correct installation

▶ The dishwasher must be installed and connected in compliance with the supplied installation sheet.

▶ Be careful before and while installing the dishwasher. Some metal parts pose a risk of injury / being cut. Wear protective gloves.

▶ The way in which the dishwasher is installed must not cause doors to be blocked when the door is automatically opened (AutoOpen function).

▶ If the dishwasher is being used behind closed cabinet fronts (e.g., doors), ensure that the automatic door opening mechanism is not blocked.
The cabinet units used must be sufficiently resistant to moisture.
The installation space must be well ventilated.

▶ The dishwasher must be correctly aligned horizontally to ensure problem-free operation.

▶ In order to ensure stability, built-under and integrated dishwashers must only be installed under a continuous countertop which is secured to adjacent cabinetry.

▶ A sink in the adjacent cabinet of the dishwasher must be carefully sealed. Regularly check for leaks to avoid damage to the dishwasher.

▶ The dishwasher must only be built into a tall unit if additional safety precautions are taken. In order to safely install the appliance in a tall unit, please use the tall unit installation kit and observe the installation sheet provided. Otherwise there is the danger of the unit tipping over.

▶ The door springs must be evenly adjusted on both sides. They are correctly adjusted when the door remains stationary when left half open (approx. 45° opening angle). It is also important that the door cannot fall open.
The appliance must only be operated with properly adjusted door springs.
If the door cannot be adjusted properly, contact Miele Service.

The maximum weight of the front panel that can be aligned with the factory fitted door springs is 10–12 kg (depending on model).

Correct use

▶ Do not use solvents in the wash cabinet. There is a danger of explosion.

▶ Dishwasher detergents can cause burning on the skin and in the eyes, nose, mouth, and throat. Avoid contact with detergents. Do not inhale powder detergents. Do not swallow dishwasher detergents. Seek medical attention immediately if detergent has been swallowed or inhaled.

▶ Avoid leaving the dishwasher door open unnecessarily. You could injure yourself on the opened door or trip over it.

▶ Do not sit, stand, or lean on the opened door. The dishwasher can tip over. This could injure you or damage the dishwasher.

▶ Dishware may be very hot at the end of the program. Allow dishware to cool until it is comfortable enough to handle before unloading them.

▶ Only use detergent and rinse aid formulated for domestic dishwashers. Do not use liquid dish soap.

▶ Do not use any commercial or industrial detergents. These may cause material damage, and there is a risk of a severe explosive chemical reaction (such as an explosive oxyhydrogen gas reaction).

▶ Do not fill the rinse aid reservoir with powder or liquid detergent. This will cause damage to the rinse aid reservoir.

▶ Do not fill the AutoDos (depending on model) with powder or liquid detergent. Loose detergent will damage the AutoDos.

▶ Do not fill the salt reservoir with powder or liquid detergent. Dishwasher detergent will damage the water softener.

▶ Use only special, coarse-grained reactivation salt or other pure evaporated salt. Other types of salt may contain insoluble components which can cause the water softener to malfunction.

▶ In dishwashers with a cutlery basket (depending on model), knives and forks should be placed with the handles upwards in the basket for safety reasons. Knives and forks placed with the handles downwards pose a danger of injury.

▶ Plastic items which cannot withstand being washed in hot water, such as disposable plastic containers or plastic cutlery, should not be cleaned in the dishwasher. The high temperatures in the dishwasher may cause them to melt or lose shape.

▶ If you use the timer option, the detergent compartment must be dry. Wipe dry with a cloth first if necessary. The detergent will clump together if the detergent compartment is not dry, and this may mean that it is not fully rinsed out.

Accessories and spare parts

▶ Only use original Miele accessories. If other parts are used, warranty, performance, and, if applicable, product liability claims will be invalidated.

▶ Miele will guarantee to supply functional spare parts for a minimum of 10 years and up to 15 years following the discontinuation of your dishwasher.

Transport

▶ Damage to the dishwasher can compromise your safety. Before using the dishwasher, check it for any visible transport damage. Never use a damaged dishwasher.

▶ Only transport the dishwasher in an upright position so that no water flows into the electrical controls, as this would cause faults.

▶ If you wish to transport the dishwasher, empty it and securely fasten all loose parts such as baskets, hoses, and power cables.

Disposal of your old dishwasher

▶ Remove the door of the dishwasher so that children cannot become trapped inside.

Notes on the operating instructions

These operating instructions apply to several different dishwasher models of different heights.
The different dishwasher models will be named as follows:
normal = dishwasher measuring 81.5 cm high (built-in appliance)
or 85.5 cm high (freestanding appliance)
XXL = dishwasher measuring 85.5 cm high (built-in appliance).

Notes on the layout

Warnings

⚠ Information which is important for safety is highlighted in a thick framed box with a warning symbol. This alerts you to the potential danger of injury to people or damage to property.

Read these warning notes carefully and observe the procedural instructions and codes of practice they describe.

Notes

Notes contain information that requires particular attention.

They are highlighted by a thickly framed box.

Additional information and comments

Additional information and comments are contained in a narrow frame.

Instructions for the user

Instructions on how to operate the dishwasher are identified by marked operating steps. They explain the procedure step by step.
Operating steps are indicated by a black square bullet point.

Example:
■ Select the desired setting and press *OK* to confirm.

The following items are supplied:

- dishwasher
- operating instructions for operating the dishwasher
- installation sheet for installing the dishwasher
- other installation accessories for installing the dishwasher (see installation sheet)
- funnel for filling the reactivation salt
- additional printed matter and add-ons if required

Guide to the appliance

Machine overview

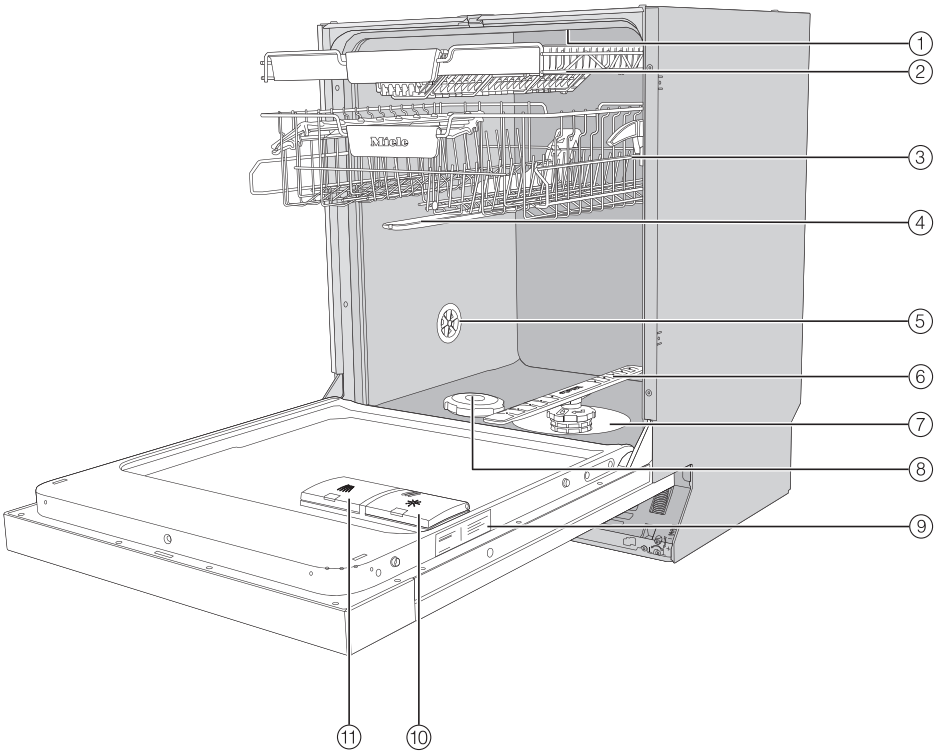

① Top spray arm
② Cutlery tray (depending on model)
③ Upper basket (depending on model)
④ Middle spray arm
⑤ Aeration valve
⑥ Lower spray arm
⑦ Filter combination
⑧ Salt reservoir
⑨ Data plate
⑩ Rinse aid reservoir
⑪ Detergent compartment

Control field

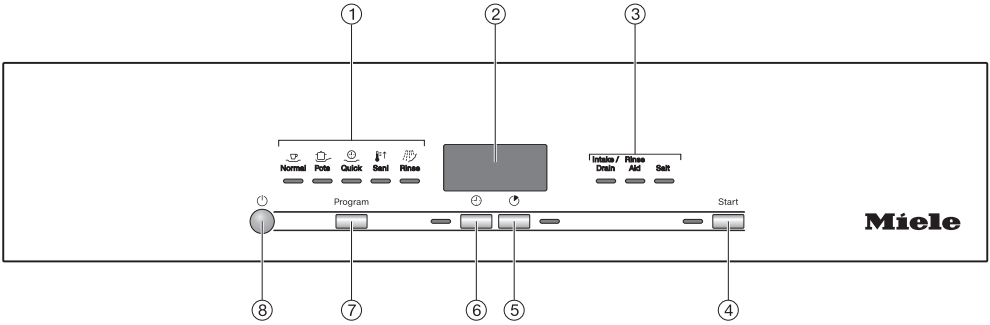

① Program selection

Normal = Normal
Pots = Pots & pans
Quick = QuickIntenseWash
Sani = SaniWash
Rinse = Rinse & Hold

② Time display

③ Indicator lights / refill reminders
/ = Intake / Drainage
= Rinse aid
= Salt

④ *Start* button with indicator light
For starting the selected program.

⑤ *Express* button
For reducing the program cycle time.

⑥ *Timer* button
For selecting a later program start.

⑦ *Program* program selection button
For program selection.

⑧ *On / Off button*
For turning the dishwasher on and off.

Caring for the environment

Disposal of the packaging material

The cardboard box and packaging materials protect the appliance during shipping. They have been designed to be biodegradable and recyclable.

Recycling the packaging reduces the use of raw materials in the manufacturing process and also the amount of waste.

Disposal of your old appliance

Electronic and electrical appliances contain many valuable materials. They also contain certain materials, compounds and components which were essential for the proper functioning and safe use of the equipment. These could be hazardous to your health and to the environment if disposed of with general waste or if handled incorrectly. Therefore, please do not dispose of your old appliance with general waste.

Consult with local authorities, dealers or Miele in order to dispose of and recycle electrical and electronic appliances. Miele assumes no responsibility for deleting any personal data left on the appliance being disposed. Please ensure that your old appliance is kept away from children until removal. Observe safety requirements for appliances that may tip over or pose an entrapment hazard.

Every dishwasher is tested at the factory. There will be residual water in the machine from this test. It is not an indication that the dishwasher has been used previously.

Opening the door

In some programs, the door automatically opens slightly to assist the drying process.
This function can be deactivated, if preferred (see “AutoOpen” under “Options”).

⚠ Caution: Avoid blocking doors
The automatic door-opening function could cause doors to be blocked.
Install the dishwasher so that the door does not block any other doors when it opens automatically.

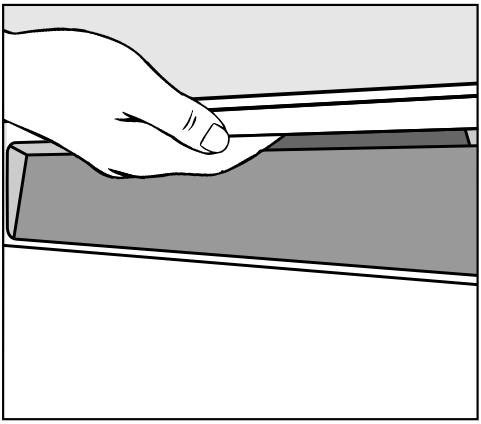

- To open the door, reach under the recessed grip and pull the handle hard.
- Open the door fully to disengage the locking mechanism.

At the end of the program, if the AutoOpen function is on, the door locking rail automatically retracts.
The door lock rail must be fully retracted before you close the door again.

To prevent a technical fault, do not hold the door locking rail when retracting.

If the door is opened during operation, all functions are automatically interrupted.

⚠ Risk of scalding due to hot water.
During operation, water in the dishwasher may be very hot.
During operation, only open the door with extreme caution.

⚠ Risk of injury due to door opening automatically.
The door may open automatically at the end of a program.
Keep the area around the door free of obstructions.

Closing the door

- Push the baskets in.
- Press the door until the door latch engages.

At the end of the program, if the AutoOpen function is on, the door locking rail must be fully retracted before the door is closed. Otherwise, the door locking rail will hit the door.

⚠ Risk of crushing due to the door closing.
When closing the door, you are at risk of shutting your fingers in it.
Do not put your hand inside the door as it is closing.

Activating the child lock

Use the child lock to prevent children opening the dishwasher door. The door can then only be opened by using a lot of force.

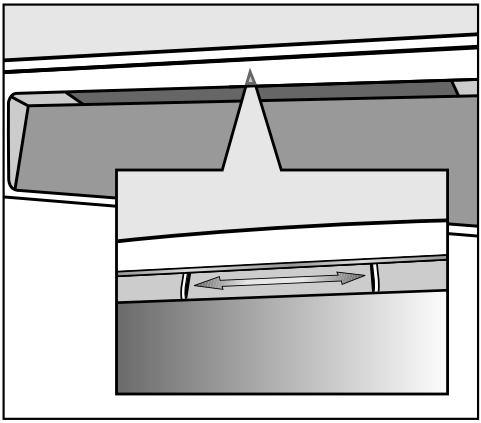

- To lock the door, push the slide underneath the door grip to the right.
- To unlock the door, push the slide to the left.

Water softener

In order to achieve good cleaning results, the dishwasher needs to operate with soft water. Hard water results in a build-up of calcium deposits on dishware and in the dishwasher. Domestic water with a hardness level higher than 0.9 mmol/l (5 °dH – German scale) must be softened. This occurs automatically in the integrated water softener. The water softener is suitable for a water hardness level of up to 12.6 mmol/l (70 °dH – German scale).

In order to be reactivated, the water softener requires reactivation salt. Depending on the water hardness level (< 3.8 mmol/l, or < 21 °dH – German scale), reactivation salt may not be required if combination detergents are being used (see “Active ingredients” under “Detergents”).

- You should program the dishwasher to the correct water hardness for your area.
- Your local water authority will be able to advise you of the water hardness level in your area.
- Where the water hardness fluctuates (e.g., between 1.8 and 2.7 mmol/l or 10–15 °dH – German scale), always program the dishwasher to the higher value (2.7 mmol/l or 15 °dH – German scale in this example).

If the water hardness in your area is available in a unit other than °dH, you can convert the values as follows:
1 °dH = 0.18 mmol/l = 1.78 °fH

The dishwasher is programmed at the factory for a water hardness level 1 °dH – German scale.

If your water hardness level corresponds to this setting, you can skip to the next section.

However, if you have a different water hardness level, you must adjust the water softener to match your water hardness.

Displaying and setting the water hardness level

- Turn the dishwasher off with the ⏻ button, if it is turned on.
- Press the *Start* button in and, **while holding it in**, turn the dishwasher on using the ⏻ button.
  Keep the *Start* button pressed in for at least 4 seconds until the *Start* indicator light comes on.

If this does not happen, start the procedure from the beginning again.

- Press the *Program* button 2 times.

The left program indicator light will flash rapidly 2 times at intervals.

The value set for the water hardness is shown as a figure after *P* in the time display.

P 1 4 will start flashing in the time display.
A water hardness of 14 gr/gal (14 °dH – German scale) is set.

- Use the *Start* button to set the water hardness value in your area.
  The dosage amount increases each time you press the button. When the highest value is reached, the setting starts again from the beginning.

The setting is now saved.

- Turn the dishwasher off with the ⏻ button.

Reactivation salt

In order to maintain the functions of the water softener, it must be reactivated regularly.

In order to be reactivated, the water softener requires reactivation salt. Depending on the water hardness level (< 3.8 mmol/l, or < 21 °dH – German scale), reactivation salt may not be required if combination detergents are being used (see “Active ingredients” under “Detergents”).

If the water in your area is very soft and constantly **lower than 0.9 mmol/l (5 °dH – German scale),** you do **not** need to add reactivation salt. The salt refill reminder will automatically turn off after the water hardness has been set accordingly (see “Displaying and setting the water hardness level” under “Before using for the first time”).

⚠ Damage to the water softener from detergent.
Dishwasher detergent will damage the water softener.
Do not fill the salt reservoir with powder or liquid detergent.

⚠ Damage caused by using unsuitable salts.
Some types of salt may contain insoluble components which can cause the water softener to malfunction.
Use only special, coarse-grained reactivation salt or other pure evaporated salt.

If you only ever use combination detergent products containing salt and rinse aid in your dishwasher, you can turn off both refill reminders if you wish (see “Turning off the refill reminders” under “Options”).

Please make sure that if you stop using combination detergents, you refill the reactivation salt and rinse aid. Turn the refill reminders back on if required.

Filling the salt reservoir

Before filling the salt reservoir for the first time, you must fill it with approx. 2 l of water to enable the salt to dissolve.

Once the dishwasher has been used once, there is always sufficient water in the salt reservoir.

- Remove the lower basket from the wash cabinet and unscrew the salt reservoir cap.

⚠ Danger of corrosion due to saline solution.
Water or saline solution will run out of the salt reservoir when the cap is opened. Salt solution that runs out can cause corrosion in the wash cabinet and to the wash items.
The cap should therefore only be removed in order to refill the salt reservoir.

- Fill the salt reservoir with approx. 2 l of water (first use only).

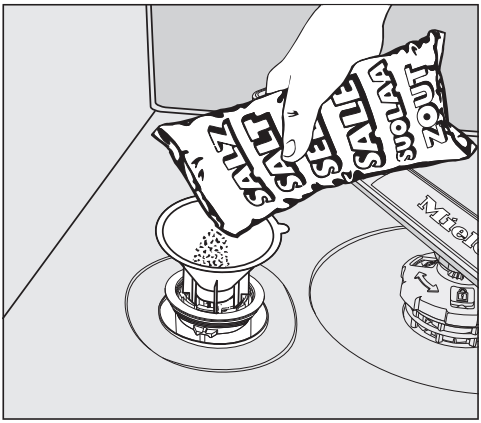

- Place the funnel provided over the salt reservoir and carefully fill with reactivation salt until the reservoir is full. The salt reservoir holds up to 2 kg of salt, depending on the type of salt used.
- Clean off salt residues from around the salt reservoir opening. Next, screw the salt reservoir cap on again firmly.
- Immediately after filling the salt reservoir and each time you remove the salt reservoir cap, run the 65°C *QuickIntenseWash* program with the *Express* program option selected without wash items in the dishwasher to dissolve and remove any traces of salt from the wash cabinet.

Refilling the salt

- When the *Salt* refill reminder lights up, wait until the end of the program and then refill the salt reservoir.

⚠ Danger of corrosion due to saline solution.
Salt solution that runs out can cause corrosion in the wash cabinet and to the wash items.
Each time you remove the salt reservoir cap, you must run the 65°C *QuickIntenseWash* program with the *Express* program option selected without wash items in the dishwasher. This will dissolve and remove any traces of salt from the wash cabinet.

After the salt reservoir has been filled, the refill reminder may still appear in the display if the salt concentration has not yet reached the correct level. It will go out once the salt concentration has reached the correct level.

The salt refill indicator will be turned off if you have programmed the dishwasher for a water hardness below 0.9 mmol/l (5 °dH – German scale).

Rinse aid

Rinse aid is necessary to ensure water does not cling and leave marks on dishware during the drying phase and helps dishware dry faster after it has been washed.
Rinse aid is poured into the container and the amount set is dispensed automatically.

⚠ Liquid dish soap or detergent can cause damage.
Liquid dish soap and detergent can damage the rinse aid reservoir.
Only fill it with rinse aid formulated for domestic dishwashers.

Alternatively, you could use liquid citric acid at a concentration of up to 10%. The resulting rinsing and drying quality will not, however, be as good as when rinse aid is used.

⚠ Risk of acid damage.
The dishwasher can be damaged by high concentrations of acid.
Under no circumstances should you use citric acid with a higher acid content.

If you only ever wish to use combination detergent products in your dishwasher, you do not need to add rinse aid.
However, for optimum rinsing and drying results, use dishwasher detergent and add reactivation salt and rinse aid separately.

Please make sure that if you stop using combination detergents, you refill the reactivation salt and rinse aid. Turn the refill reminders back on if required.

Adding rinse aid

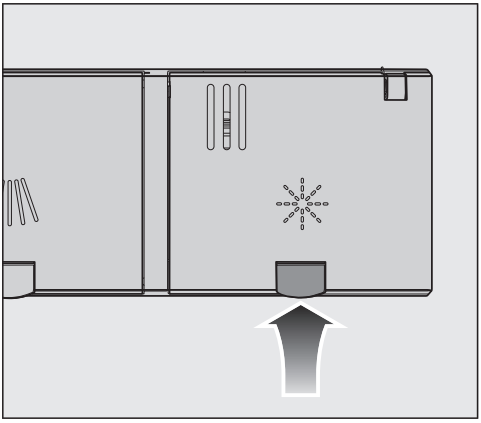

- Press the yellow button ✳ on the lid of the rinse aid reservoir.

The lid will spring open.

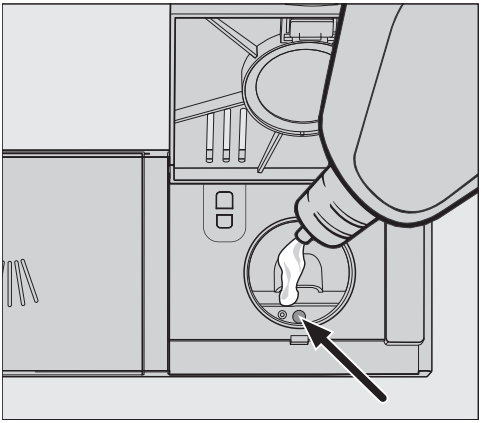

- Fill with rinse aid until the filling level indicator (arrow) changes to a dark colour while the door is horizontally open.

The rinse aid reservoir holds approximately 110 ml.

- Close the lid firmly until you hear it click into place. Otherwise, water can enter the rinse aid reservoir during a program.
- Wipe up any spilled rinse aid. This prevents over-foaming occurring during the next program.

Filling the rinse aid reservoir

When the refill reminder ✳ *Rinse aid* appears in the display, the reservoir contains sufficient rinse aid for 2 to 3 programs only.

- Add rinse aid in plenty of time.

The rinse aid refill reminder will go out.

If you only ever use combination detergent products containing salt and rinse aid in your dishwasher, you can turn off both refill reminders if you wish (see “Turning off the refill reminders” under “Options”).

Setting the rinse aid dosage

You can adjust the rinse aid dosage for best results.
The rinse aid dosage can be set from 0 to 6 ml.
3 ml is the factory default setting.

The rinse aid dosage can turn out to be higher than the set value due to the automatic adjustment of the program.

If spots appear on dishware:

- Increase the rinse aid dosage.

If clouding or smearing appears on dishware:

- Decrease the rinse aid dosage.

■ Turn the dishwasher off with the ⏻ button, if it is turned on.

■ Press the *Start* button in and, **while holding it in**, turn the dishwasher on using the ⏻ button.
Keep the *Start* button pressed in for at least 4 seconds until the *Start* indicator light comes on.

If this does not happen, start the procedure from the beginning again.

■ Press the *Program* button 3 times.

The left program indicator light will flash rapidly 3 times at intervals.

The set value will appear in the display after *P*.

P 3 will start flashing in the time display.
Setting 3 is set.

■ Use the *Start* button to select the required setting.
The dosage amount increases each time you press the button. When the highest value is reached, the setting starts again from the beginning.

The setting is now saved.

■ Turn the dishwasher off with the ⏻ button.

Energy-saving dishwashing

This dishwasher is exceptionally economical in its use of water and electricity.
For best results, follow these tips:

- Washing in a dishwasher generally uses less water and energy than washing by hand.
- There is no need to pre-rinse items under running water. This would unnecessarily increase water and energy consumption.
- Make full use of the baskets without overloading the dishwasher. This results in the most economical dishwashing in terms of energy and water consumption.
- Choose a program that best suits the degree of soiling and the type of dishware being washed (see “Program overview”).
- Select the *Normal* program for energy-saving dishwashing. This program is the most efficient in terms of its combined energy and water consumption for cleaning dishware with a normal level of soiling.
- Follow the detergent manufacturer’s recommendations on detergent dosage.
- When using powder or liquid detergent, you can use $^{1}/_{3}$ less detergent if baskets are only half full.
- You can connect the dishwasher to a hot water supply. A hot water connection is particularly suitable with energy-saving water heating sources, such as solar energy with a circulation system.
  If the water is heated by electricity, we would recommend connection to cold water.

General information

Remove coarse food residues from dishware.

There is no need to pre-rinse items under running water.

⚠ Damage can be caused by ash, sand, wax, lubricating grease, or paint.
These substances will contaminate the dishwasher and can then no longer be removed.
Do not wash items soiled with these substances in the dishwasher.

Dishware can be loaded anywhere in the baskets, but the following notes should be observed:

- Do not place dishware and cutlery inside other pieces where they may be concealed.
- Load dishware so that water can access all surfaces. This ensures that dishware will be properly cleaned.
- Make sure that all items are securely positioned.
- Hollow items such as cups, glasses, and pots should be placed upside down in the baskets.
- Tall, narrow, hollow items such as champagne glasses should be placed in the centre of the basket rather than in the corners. This ensures the hollow items are more easily accessed by the water jets.
- Wide based items should be placed at an angle so that water can run off them freely.
- The spray arms must not be blocked by items which are too tall or hang through the baskets. Test for free movement by manually rotating the spray arms.
- Make sure that small items cannot fall through the holders in the baskets.
  Small items such as lids should therefore be placed in the cutlery tray or cutlery basket (depending on model).

Some foods such as carrots, tomatoes, or ketchup may contain natural dyes. These dyes can discolour plastic items in the dishwasher if large quantities of these foods are in contact with the dishware inside the machine. The stability of plastic items is not affected by this discolouration. Washing silverware can also cause plastic items to discolour.

Items not suitable for dishwashers:

- Wooden cutlery and dishware or items with wooden parts. These may discolour and fade. The glue used in these items is not dishwasher-safe and wooden handles may come loose after being washed in a dishwasher.
- Craft items, antiques, valuable vases, and decorative glasses are also not dishwasher-safe.
- Plastic items which are not heat-resistant may become deformed.
- Copper, brass, tin, and aluminum items. These may discolour or become dull.
- Colours painted over a glaze. This type of decoration may fade after a number of cycles.
- Delicate glasses and glassware containing lead crystal. Clouding may occur over time.

Silver

⚠ Damage caused by using unsuitable detergents.
If silverware is cleaned using an unsuitable cleaning agent, it can be irreparably damaged.

Silverware that has been in contact with foods containing sulphur can discolour. These include egg yolk, onions, mayonnaise, mustard, legumes, fish, fish brine, and marinades.
Silverware previously cleaned with a **silver polish** may still be damp or spotted at the end of a program, where water has not run off smoothly.

Useful tip: Rub the silverware dry with a cloth.

⚠ Damage due to caustic alkaline detergents.
Aluminum parts (e.g., the grease filters of ventilation hoods) can be damaged by caustic alkaline detergents. In extreme cases, there is a risk of an explosive chemical reaction (such as an explosive oxyhydrogen gas reaction).
Aluminum components must not be cleaned in the dishwasher with caustic alkaline commercial or industrial detergents.

Useful tip: When purchasing new dishware and cutlery, make sure they are dishwasher-safe if you want to wash them in the dishwasher.

Glass care

- Clouding may occur on glasses after frequent washing. When washing delicate glassware in the dishwasher, ensure that only a special glass-care program with very low temperatures is selected (see “Program overview”). This will reduce the risk of clouding.
- Purchase glassware that is dishwasher-safe (e.g., Riedel glassware).
- Use detergents with glass protective additives.

Loading examples

Loading for 16 standard place settings with cutlery tray

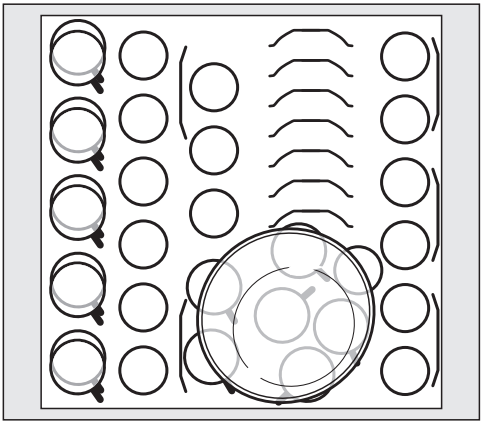

Upper basket

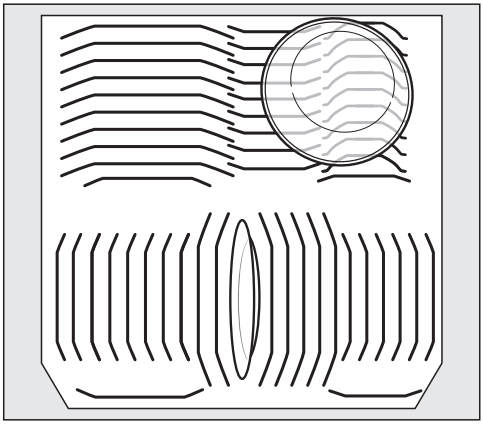

Lower basket

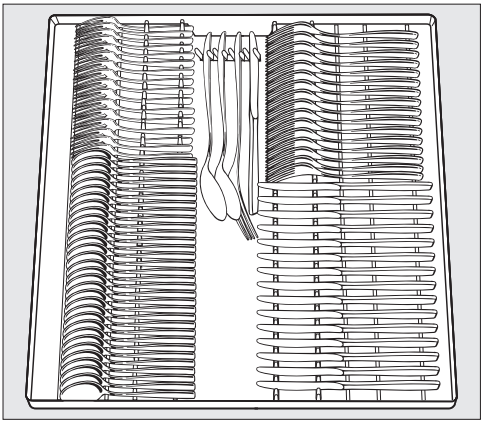

Cutlery tray

Loading for 13 standard place settings with cutlery basket

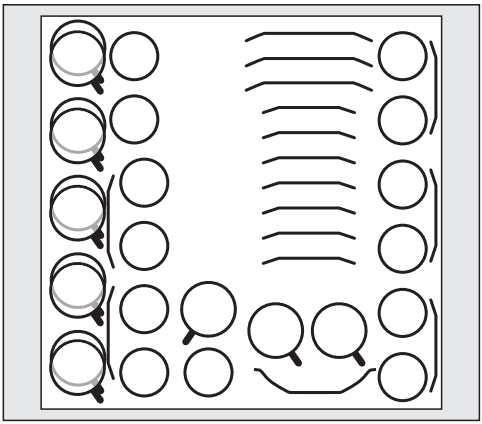

Upper basket

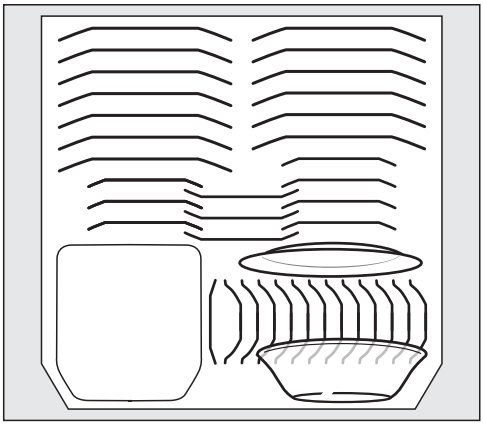

Lower basket

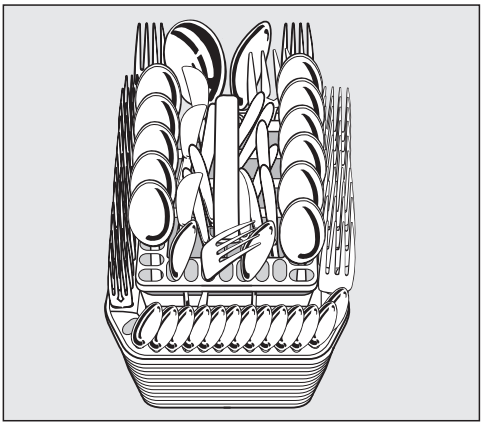

Cutlery basket

Upper basket

See “Loading examples” under “Loading the dishwasher” for examples of how to load dishware and cutlery.

Loading the upper basket

⚠ Risk of damage due to water leakage.
If you run the dishwasher without the upper basket, water can leak out of the dishwasher.
Only run the dishwasher with the upper basket in place (except during the Tall items program, if available).

- Use the upper basket for small, lightweight, and delicate items such as cups, saucers, glasses, dessert bowls, etc.
  Shallow pans or casserole dishes can also be placed in the upper basket.
- Long items such as soup ladles and mixing spoons should be placed lying down across the front of the upper basket.

Loading the FlexCare Cup Rack

You can put cups, small bowls, and flat dishware on the FlexCare Cup Rack. Glasses can be arranged along the cup rack so they sit securely during the program.

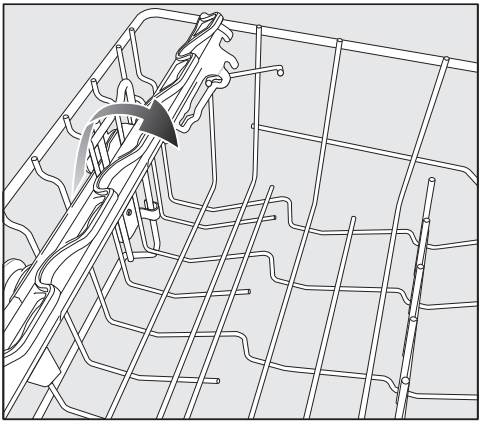

- Lower the cup rack to do so.
- Raise the cup rack upward to make room for tall items.

Adjusting the FlexCare Cup Rack

You can set the height and depth of the cup rack at 2 different levels so that it can accommodate larger cups and so that taller items can be placed underneath it.

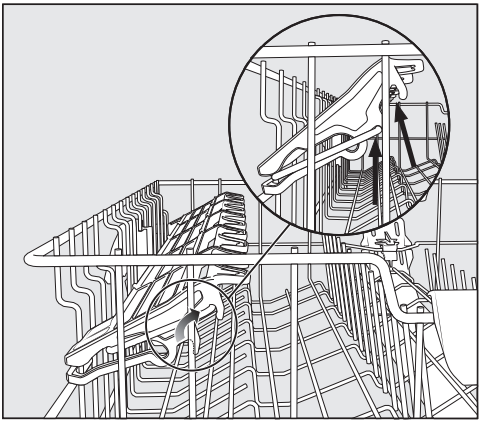

- Pull the cup rack upward and click it into the desired position (see arrow).

Adjusting the upper basket

In order to gain more space for taller items in the lower basket or upper basket, the upper basket can be adjusted on 3 levels with 3/4" (2 cm) between each level.

The upper basket can also be set at an angle so that water can run off freely from recesses. Make sure, however, that the basket can slide smoothly in and out of the wash cabinet.

- Pull out the upper basket.

Raise the upper basket:

- Lift the basket up until it clicks into place.

Lower the upper basket:

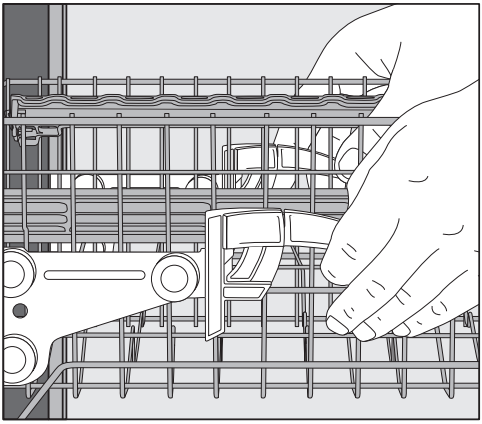

- Pull upward on the levers at either side of the upper basket.
- Adjust the basket to the desired height and then push the levers securely back down into position.

When adjusting the upper basket, make sure that tall plates in the lower basket do not block the middle spray arm.

Lower basket

See “Loading examples” under “Loading the dishwasher” for examples of how to load dishware and cutlery.

Loading the lower basket

- Place larger and heavier items such as plates, serving platters, saucepans, bowls, etc., in the lower basket. Glasses, cups, and small plates and saucers can also be placed in the lower basket.

Loading the MultiComfort area

The rear section of the lower basket is used for washing cups, glasses, plates, pots, and pans.

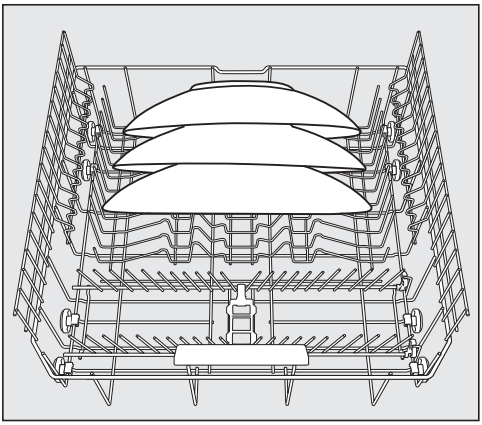

- Place very large plates in the middle of the lower basket.

Useful tip: When tilted, plates up to 13 3/4" (35 cm) in diameter can be accommodated.

Lowering the spikes

The spikes at the front are used for washing plates, soup bowls, platters, dessert bowls, and saucers.

Both right-hand rows of spikes can be lowered to make more room for large items such as pots, pans, and serving dishes.

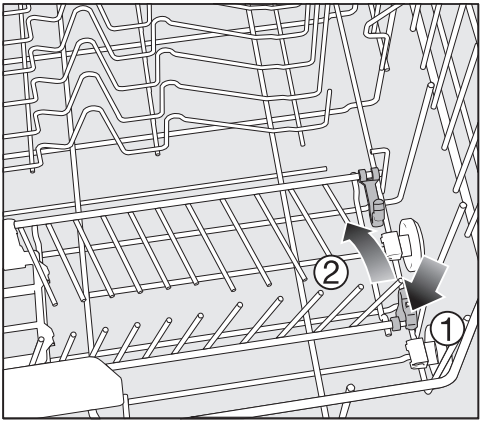

- Press the yellow lever downward ①, and then lower the spikes ②.

Cutlery tray / cutlery basket (depending on model)

See “Loading examples” under “Loading the dishwasher” for examples of how to load dishware and cutlery.

- Load the cutlery into the 3D MultiFlex Tray or into the cutlery basket (depending on the model).

Loading the 3D MultiFlex Tray

To make unloading easier, cutlery should be grouped in zones, one for knives, one for forks, one for spoons, etc.

Spoon heads should be placed in contact with at least one of the serrated retainers on the base of the cutlery tray to ensure that water runs off them freely.

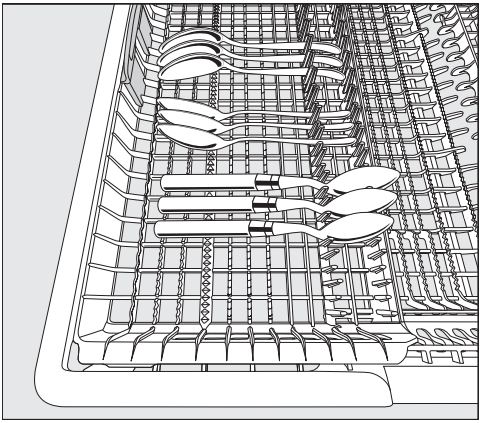

- If spoon handles do not fit between the holders, then lay them the other way round.

You can push the left insert to the middle in order to accommodate tall items and long stemmed glasses in the upper basket.

You can put large and long cutlery in the recessed middle part of the tray.

Arrange tall items (such as cake server) so that they do not block the upper spray arm.

You can adjust the height of the right-hand insert to create more space in the right-hand part of the tray for larger cutlery items or smaller dishware.

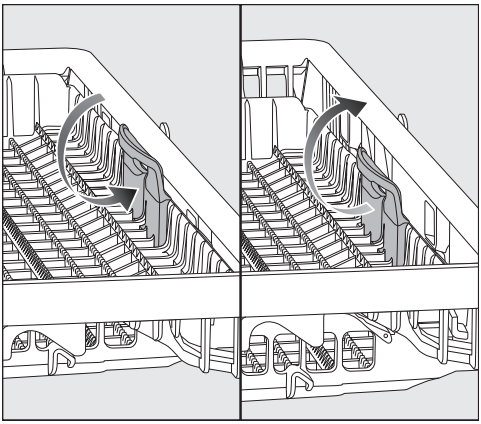

- Pull the insert inward by the yellow handle and click it into place in one of the two positions.

Loading the cutlery basket

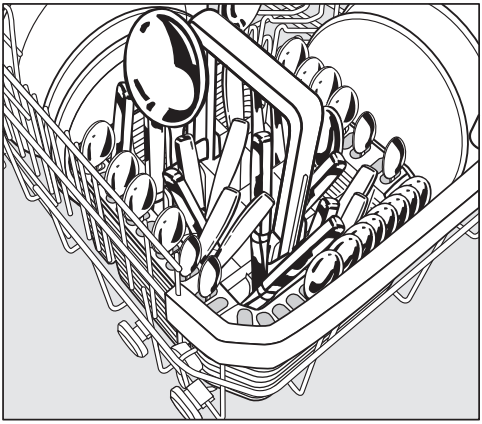

The cutlery basket can be placed anywhere on the front rows of spikes in the left or right corner of the lower basket.

- To avoid the risk of injury, knives and forks should be placed with the handles upward in the cutlery basket.
- Place small utensils in the individual slots on 3 sides of the cutlery basket.

Loading the cutlery insert for the cutlery basket

Use the insert supplied for heavily soiled items of cutlery. As this insert separates the items, they do not overlap and can be more easily accessed by the water jets.

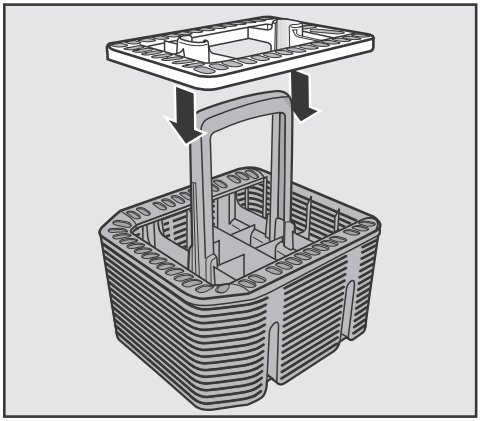

- Install the insert onto the cutlery basket if required.

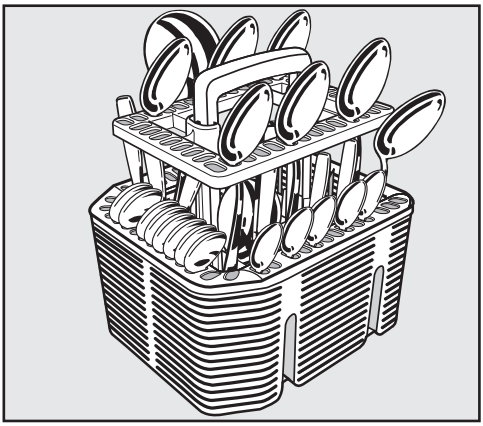

- Place the items into the insert with the handles facing downward.
- Arrange them evenly along the insert.

Active ingredients

⚠ Damage caused by using unsuitable detergents.
Detergents that are not suitable for domestic dishwashers can cause damage to the dishwasher or to the wash items.
Only use detergents formulated for domestic dishwashers.

Modern detergents contain various active ingredients, the most important of which are:

- Water softening complexing agents to prevent limescale.
- Alkalis to aid removal of dried-on soiling.
- Enzymes to break down starch and loosen protein.
- Oxygen-based bleaching agents to remove coloured stains (e.g., tea, coffee, tomato sauce).

Most dishwasher detergents are mildly alkaline and contain enzymes and oxygen-based bleaching agents.

There are different types of detergent:

- Powder and liquid gel detergents. These detergents allow you to adjust the amount dispensed according to the load size and the level of soiling.
- Tab detergents. These are suitable for most levels of soiling.

As well as the usual detergents, combination products are also available. These contain rinse aid and water softener (reactivation salt).
Only use these combination detergents for the water hardness levels recommended by the manufacturer on the packaging.
The cleaning and drying performance of these combination detergents can vary greatly.
Please make sure that if you stop using combination detergents, you refill the reactivation salt and rinse aid. Turn the refill reminders back on if required.

For optimum cleaning and drying results, use dishwasher detergent and add salt and rinse aid separately.

⚠ Risk of chemical burns from detergent.
Dishwasher detergents can cause burning on the skin and in the eyes, nose, mouth, and throat.
Avoid contact with detergents.
Do not inhale or ingest powder detergents. Do not swallow dishwasher detergents. Seek medical attention immediately if detergent has been swallowed or inhaled.
Keep children away from detergents. Detergent residues could still be present in the machine. Keep children away from the dishwasher when the door is open. Do not fill the detergent dispenser until just before starting the program and activate the door child lock (depending on model).

Detergent dispensing

The detergent compartment holds a maximum of 50 ml.

There are marks in the detergent compartment to aid with dispensing: 20, 30, max. When the door is opened to a horizontal position, they show the approximate fill level in ml and the maximum fill height.

- Follow the detergent dosage recommended by the manufacturer on the packaging.
- Unless directed otherwise, use one detergent tab or add 20 to 30 ml of detergent to the detergent compartment, depending on the level of soiling of the dishware.

If you use less than the recommended amount of detergent, the dishware may not get properly clean.

Some tabs may not dissolve completely when the program *QuickIntenseWash* is used.

Detergent

Adding detergent

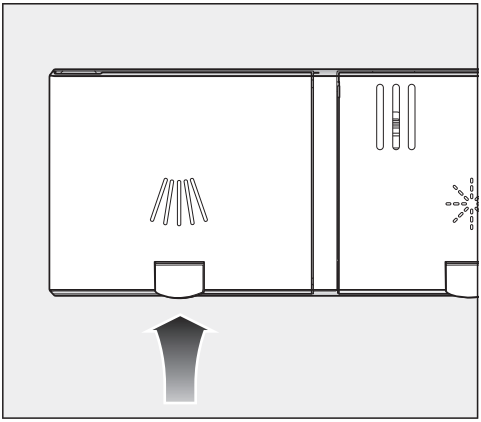

- Press the yellow button /||\\ on the lid of the detergent compartment.

The lid will spring open.
The lid will also open at the end of a program.

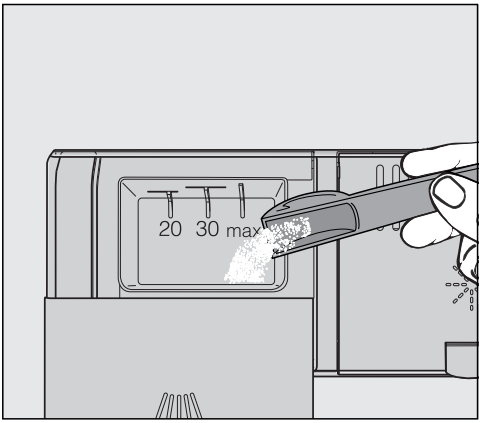

- Add the detergent to the detergent compartment.
- Push the lid shut until you hear it click into place.

The detergent must not cause the detergent-compartment lid to get stuck. This can prevent the lid from opening during the program.
Do not overfill the detergent compartment.

- Ensure that the detergent packaging is properly closed after use. This prevents the detergent from getting damp and clumping together.

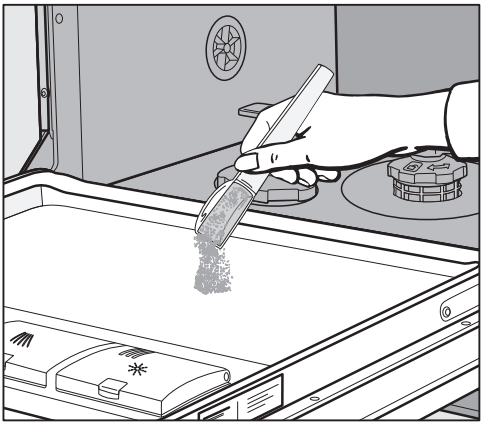

- You can also apply a small amount of detergent to the inner panel of the door in programs that have a pre-wash stage (see “Program overview”).

Turning on the dishwasher

- Make sure the spray arms can rotate freely.
- Close the door.
- Turn on the water supply faucet if it is turned off.
- Press the ⏻ button.

The *Start* indicator light flashes and the indicator light comes on next to the program selected.

Selecting a program

Choose your program according to the type of load and the degree of soiling.

The different programs and their uses are described under **“Program overview”**.

- Use the *Program* button to select the program you want.

The indicator light next to the program selected will come on.
The program cycle time will appear in hours and minutes in the display.

You can now select program options (see “Program options”).

If any program options are selected, the appropriate indicator lights will also light up.

Display of program cycle time

The cycle time of the program selected appears in hours and minutes in the display before the program begins. During the program, the time left until the end of the program is displayed.

The displayed cycle time may vary for the same program. It is influenced by, for example, the temperature of the incoming water, the reactivation cycle of the water softener, the detergent type, the amount of dishware, and how soiled it is.

When a program is selected for the first time, the display will show the average program cycle time for a cold water connection.

The program cycle times shown under “Program overview” refer to standard test loads and temperatures.

Each time a program is run, the control module calculates the program cycle time required depending on the temperature of the water taken into the dishwasher and the amount of dishware.

Starting a program

The dishwasher can only be started if the door is closed.

■ Press the *Start* button.

The program starts.

The *Start* indicator light will come on.

⚠ Risk of scalding due to hot water.
During operation, water in the dishwasher may be very hot.
During operation, only open the door with extreme caution.

End of program

The program has ended when 0:00 shows in the display.

In some programs, the door will automatically open slightly if the AutoOpen function is activated (see “AutoOpen” under “Options”). This improves the drying process.

The drying fan may continue to run for a few minutes at the end of the program.

⚠ Risk of damage due to steam.
Steam from the dishwasher could damage the edges of delicate countertops when you open the door at the end of the program and the fan is no longer running.
If you have deactivated the automatic door opening function (see “AutoOpen” under “Options”) but would like to open the door as soon as the program has finished, make sure that you open the door fully.

Energy management

To save energy, the dishwasher will switch off automatically 10 minutes after the last time a button is pressed or after the end of a program.

You can turn the dishwasher back on again with the ⏻ button.

The dishwasher will not turn itself off while a program is running or if there is a fault.

Turning off the dishwasher

- The dishwasher can be turned off at any time using the ⏻ button.

Turning the dishwasher off during a program stops the program.

You can also do this to stop an ongoing timer.

⚠ Risk of damage from leaking water.
Leaking water can cause damage.
If the dishwasher is not going to be used for a longer period of time, e.g., during vacations, the water supply faucet should be turned off.

Unloading the dishwasher

Dishware tends to break and chip more easily when it is hot. Allow dishware to cool until it is comfortable enough to handle before unloading them.

The dishware will cool much faster if you open the door when the program has ended.

- First unload the lower basket, then the upper basket, and finally the 3D MultiFlex Tray (if present).
  This will prevent water drops from the upper basket and 3D MultiFlex Tray from falling onto the dishware in the lower basket.

Interrupting a program

A program will be interrupted as soon as the door is opened.

- Close the door and press the *Start* button.

The program will continue from the point at which it was interrupted.

⚠ Risk of scalding due to hot water.
During operation, water in the dishwasher may be very hot.
During operation, only open the door with extreme caution.

Cancelling or changing a program

If a program is cancelled, important program stages may be missed.
A program should only be cancelled in the first few minutes.

If a program has already started and you wish to cancel it, proceed as follows:

- Turn the dishwasher off with the ⏻ button.

If you would like to select another program:

- Turn the dishwasher on again with the ⏻ button.
- If you have dispensed detergent manually, check whether the detergent compartment is still closed. If the lid is already open, fill it with detergent again and close the lid.
- Select the program you want, and then start it.

Timer

You can set the start time of a program. The program start time can be delayed for between 30 minutes and 24 hours. With start-time delays between 30 minutes and 3 hours, the delay can be set in 30 minute stages. It is set in hours for periods longer than this.

During manual detergent dispensing, the detergent will clump together if the detergent compartment is not dry, and this may mean it is not fully rinsed out.
When using the timer function, make sure that the detergent compartment is dry before adding detergent. Wipe dry with a cloth first, if necessary.
Do not use any liquid detergents. These can leak out.

⚠ Danger to health due to detergent.
To prevent children coming into contact with dishwasher detergent:
Do not fill the detergent dispenser **until just before starting the program**, i.e., before you activate the timer. Use the child lock to secure the dishwasher door.

Activating the timer

- Turn the dishwasher on with the ⏻ button.

The *Start* indicator light will flash.

- Select the program you want to use.
- Press the ◷ *Timer* button.

The most recently set time will be shown on the time display. The ◷ *Timer* indicator light will light up.

- Set the required time after which the program should start automatically using the ◷ button.

If the ◷ button is pressed and held, the time will increase automatically up to 24 hours. To start again with 0:30 hours, press the ◷ button twice.

- Press the *Start* button.

The *Start* indicator light will come on.

After you have activated the timer, all the displays will turn off after a few minutes to save energy.

Press the ⏻ button to switch the time display back on again for a few minutes.

The time up until the program starts will count down in the display in hours for durations above 10 hours, and in minutes for durations below 10 hours.

At the end of the delay period, the program selected begins automatically. The time left will appear in the time display and the ⏲ *Timer* indicator light will go out.

Starting a program before the time for the timer has elapsed:

A program can be started before the time for the timer has elapsed. Proceed as follows:

- Turn the dishwasher off with the ⏻ button.
- Turn the dishwasher on again with the ⏻ button.
- Select the program you want.
- Press the *Start* button.

The program starts. The *Start* indicator light will come on.

Program overview

Program	When to use	Program sequence				
		Pre-wash	Main wash °F/°C	Interim rinse	Final rinse °F/°C	Drying
Normal[1]	Program for regular use to completely wash a full load of normally soiled dishes with the ability to adjust energy and water consumption based on the soil load of the dishes.	✓	140–167/60–75	✓	133–149/56–65	✓
Pots & Pans	For heavily soiled dishes and normally soiled pots,pans and utensils with dried on residue; use 20% more detergent than recommended.	✓	167/75	✓	131–158/55–70	✓
Quick-Intense-Wash	“Quick program” for standard dishes soiling that has not dried on.	-	149/65	✓	140/60	✓
SaniWash	To sanitize dishware, e.g. baby bottles, cutting boards and preparation dishes.	-	167/75	✓	167/75	✓
Rinse & Hold	To rinse dishes when a complete program is not needed.	✓	-	-	-	-

[1] This program is used for energy labeling purposes.

Consumption[2]			Duration[2]	
Energy		Water		
Cold water 50°F/10°C kWh	Hot water 120°F/49°C kWh	Gallons/Liters	Cold water 50°F/10°C h:min	Hot water 120°F/49°C h:min
1.06	1.20	3.2/12.1	3:04	2:43
1.40	1.55	3.4/13.0	3:29	3:11
1.10	1.15	2.9/11.0	1:13	0:58
1.45	1.55	2.4/9.0	2:43	2:27
0.01	0.15	0.9/3.5	0:21	0:21

[2] Values were calculated under standardized testing conditions. In practice there may be variations to these figures due to variable conditions and data recorded by the sensors. Durations shown will reflect your household conditions.
Selecting program options will also affect consumption levels and program durations (see “program options”).
The energy consumption with a hot water supply includes the energy used to heat the water (exception: EnergySaver, if available).

Express

The *Express* program option reduces the program cycle time.

In order to achieve optimum cleaning results, the temperature, and therefore the energy consumption, will increase with this option.

The time by which the program cycle time is shortened varies according to the selected program.

Selecting the *Express* program option may take precedence over other selected options.

When used in combination with the *QuickIntenseWash* program, the *Express* option results in a rinse designed solely for the purpose of flushing out the wash cabinet to remove salt solution that leaked out after refilling the salt reservoir.

- Turn the dishwasher on with the button.

The *Start* indicator light will flash.

- Select a different program as required.
- Press the *Express* button.

The *Express* indicator light will come on if the program option is available for the program selected.

- Press the *Start* button to start the program.

The selected program option will remain active for that particular program until the setting is changed.

AutoOpen

In some programs, the door automatically opens slightly to assist the drying process.

This program option can be deactivated if you wish.

- Turn the dishwasher off with the ⏻ button, if it is turned on.
- Press the *Start* button in and, **while holding it in**, turn the dishwasher on using the ⏻ button.
  Keep the *Start* button pressed in for at least 4 seconds until the *Start* indicator light comes on.

If this does not happen, start the procedure from the beginning again.

- Press the *Program* button 7 times.

The left program indicator light will flash rapidly 7 times at intervals.

The flashing sequence in the time display indicates whether the AutoOpen program option is activated or not:

- *P 1*: AutoOpen is activated
- *P 0*: AutoOpen is deactivated

- Press the *Start* button to change the setting.

The setting is now saved.

- Turn the dishwasher off with the ⏻ button.

⚠ Risk of damage due to steam.
Steam from the dishwasher could damage the edges of delicate countertops when you open the door at the end of the program and the fan is no longer running.
If you have deactivated the automatic door opening function but would still like to open the door at the end of the program, then make sure that you open the door fully.

Turning off the refill reminders

If you only ever use combination detergent products containing salt and rinse aid in your dishwasher, you can turn off both refill reminders if you wish.

- Turn the dishwasher off with the ⏻ button, if it is turned on.
- Press the *Start* button in and, **while holding it in**, turn the dishwasher on using the ⏻ button.
  Keep the *Start* button pressed in for at least 4 seconds until the *Start* indicator light comes on.

If this does not happen, start the procedure from the beginning again.

- Press the *Program* button 9 times.

The left program indicator light will flash rapidly 9 times at intervals.

The flashing sequence in the time display will show whether the refill reminders are switched on or off.

- *P 1*: refill reminders are activated
- *P 0*: refill reminders are deactivated

- Press the *Start* button to change the setting.

The setting is now saved.

- Turn the dishwasher off with the ⏻ button.

Please make sure that if you stop using combination detergents, you refill the reactivation salt and rinse aid. Turn the refill reminders back on.

Extra clean

You can choose this program option to increase the cleaning performance of the programs.

If you activate this program option, the program cycle times and the main wash temperatures will increase. The water and energy consumption may increase.

- Turn the dishwasher off with the ⏻ button, if it is turned on.
- Press the *Start* button in and, **while holding it in**, turn the dishwasher on using the ⏻ button.
  Keep the *Start* button pressed in for at least 4 seconds until the *Start* indicator light comes on.

If this does not happen, start the procedure from the beginning again.

- Press the *Program* button 10 times.

The left program indicator light will emit 1 long flash at intervals.

The flashing sequence in the time display indicates whether the Extra clean program option is activated or not:

- *P 1*: Extra clean is activated
- *P 0*: Extra clean is deactivated

- Press the *Start* button to change the setting.

The setting is now saved.

- Turn the dishwasher off with the ⏻ button.

Extra Dry

You can select this program option in order to increase the program drying performance.

If you activate this program option, the program cycle times and final rinse temperatures will increase. The energy consumption may increase.

- Turn the dishwasher off with the ⏻ button, if it is turned on.
- Press the *Start* button in and, **while holding it in**, turn the dishwasher on using the ⏻ button.
  Keep the *Start* button pressed in for at least 4 seconds until the *Start* indicator light comes on.

If this does not happen, start the procedure from the beginning again.

- Press the *Program* button 11 times.

The left program indicator light will emit 1 long flash and 1 short flash at intervals.

The flashing sequence in the time display indicates whether the Extra dry program option is activated or not:

- *P 1*: Extra Dry is activated
- *P 0*: Extra Dry is deactivated

- Press the *Start* button to change the setting.

The setting is now saved.

- Turn the dishwasher off with the ⏻ button.

Second interim rinse

You can choose this program option to increase the cleaning performance of the programs with a second interim rinse.

If you activate this program option, the program cycle times and the water consumption will increase.

- Turn the dishwasher off with the ⏻ button, if it is turned on.
- Press the *Start* button in and, **while holding it in**, turn the dishwasher on using the ⏻ button.
  Keep the *Start* button held in for at least 4 seconds until the *Start* indicator light comes on.

If this does not happen, start the procedure from the beginning again.

- Press the *program* selector 12 times.

The left program indicator light will emit 1 long flash and 2 short flashes at intervals.

The flashing sequence in the time display indicates whether the “Second interim rinse” program option is activated or not:

- *P 1*: “Second interim rinse” is activated.
- *P 0*: “Second interim rinse” is deactivated.

- Press the *Start* button to change the setting.

The setting is now saved.

- Turn the dishwasher off with the ⏻ button.

Factory default settings

If you have altered any settings, you can reset them back to the factory default settings.

- Turn the dishwasher off with the ⏻ button, if it is turned on.
- Press the *Start* button in and, **while holding it in**, turn the dishwasher on using the ⏻ button.
  Keep the *Start* button pressed in for at least 4 seconds until the *Start* indicator light comes on.

If this does not happen, start the procedure from the beginning again.

- Press the *Program* button 19 times.

The left program indicator light will emit 1 long flash and 9 short flash at intervals.

The flashing sequence in the time display indicates whether the setting deviates from the factory default setting:

- *P 1*: all values are factory default settings.
- *P 0*: at least one setting has been changed.

- To reset the dishwasher to the factory default settings, press the *Start* button.

The setting is now saved.

- Turn the dishwasher off with the ⏻ button.

Check the condition of your dishwasher regularly (approx. every 4–6 months). This way, faults and problems can be avoided.

⚠ Damage caused by unsuitable cleaning agents.
All surfaces are susceptible to scratching. Contact with unsuitable cleaning agents can alter or discolour all surfaces.
Only use cleaning agents formulated for use on the relevant surfaces.

Cleaning the wash cabinet

The wash cabinet is largely self-cleaning, provided that the correct amount of detergent is always used.

If, despite this, limescale or grease deposits build up in the cabinet, these can be removed with a proprietary dishwasher cleaner (available from Miele Service or Miele's online store). Follow the instructions on the product packaging.

The frequent use of low-temperature wash programs (< 50°C) increases the risk of contamination and odours inside the wash cabinet. Run the *Pots & Pans* program once per month to clean the wash cabinet and prevent odours from developing.

- Clean the filters in the wash cabinet regularly.

Cleaning the door and the door seal

The door seal and the sides of the dishwasher door are not accessed and cleaned by the spray arm jets. As a result, mould can develop here.

- Wipe the door seals regularly with a damp cloth to remove food deposits.
- Wipe off any food or drink residues which may have dripped onto the sides of the dishwasher door before closing it.

Cleaning the control field

- The control field should **only** be wiped with a clean, damp cloth.

Cleaning the appliance front

⚠ Damage due to soiling.
Soiling that is left too long might become impossible to remove and could cause the external surfaces to alter or discolour.
Remove any soiling immediately.

- Clean the appliance front with a clean sponge and a solution of hot water and dishwashing liquid. After cleaning, wipe the appliance front dry using a soft cloth.
  A clean, damp microfibre cloth without cleaning product can also be used for cleaning.

To avoid damage to the outer surface, do not use:

- cleaning agents containing soda, ammonia, acid, or chloride
- cleaning agents containing lime scale remover
- abrasive cleaning agents, such as scouring powder, scouring liquid, or pumice stones
- cleaning agents containing solvents
- stainless steel cleaners
- dishwasher detergents
- oven cleaners
- glass cleaning agents
- hard, abrasive brushes, cloths, or sponges, e.g., pot scourers, brushes, or sponges which have been previously used with abrasive cleaning agents
- eraser sponges
- sharp metal scrapers
- steel wool
- steam cleaners

Cleaning the spray arms

Particles of food can get stuck in the spray arm jets and bearings. The spray arms should therefore be inspected regularly (approx. every 2–4 months).

Never run a wash program without using the spray arms.

⚠ Damage due to soiling entering the circulation system.
Without filters, soiling can enter the circulation system and cause a blockage.
Do not run a wash program without the lower spray arm or without the filters.
When cleaning the filters and spray arms, make sure that coarse soiling cannot get into the circulation system.

- Turn the dishwasher off.

Removing the cutlery tray (if present)

In order to be able to remove the upper spray arm, you first have to remove the cutlery tray (if present).

- Pull out the cutlery tray.

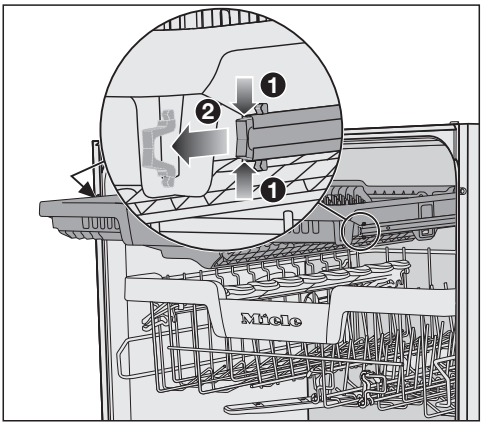

- Press the rail safety clips on both sides of the cutlery tray together ❶ and remove the safety clips ❷ at the same time.
- Take out the cutlery tray completely.

Removing the upper spray arm

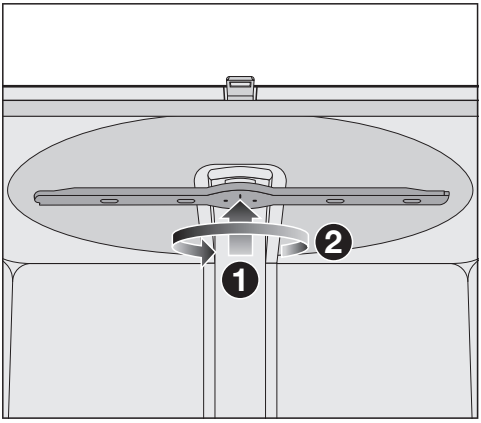

- Push the upper spray arm upward ❶ to engage the inner ratchet. Then unscrew the spray arm by rotating the screw thread counterclockwise ❷ (view from below).

Removing the middle spray arm

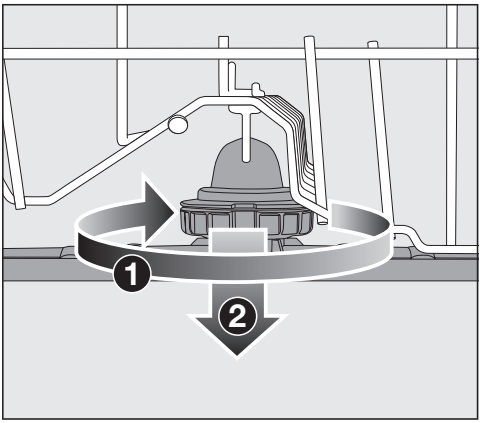

- Rotate the screw thread of the middle spray arm clockwise ❶ (view from above) and remove the spray arm ❷.

Removing the lower spray arm

- Remove the lower basket.

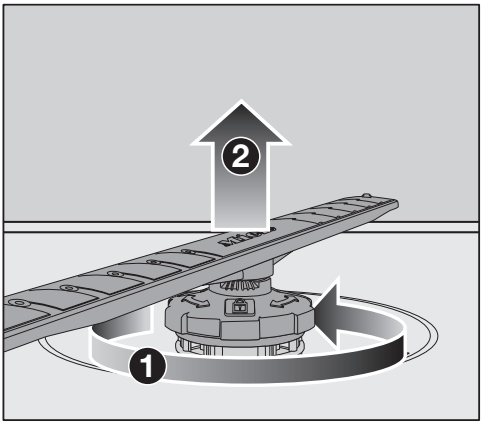

- Rotate the screw thread of the lower spray arm counterclockwise ❶ (view from above) and pull the spray arm upward to remove ❷.

Cleaning the spray arms

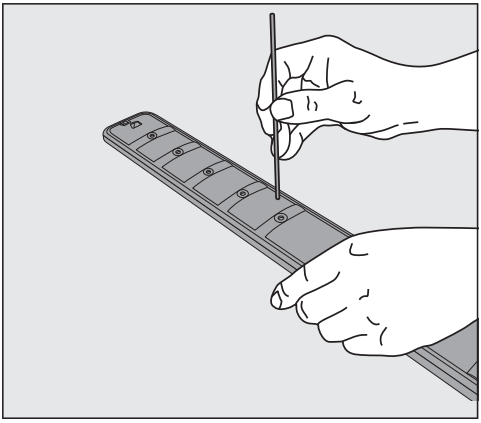

- Use a pointed object to push food particles that are stuck in the spray arm jets into the spray arm.
- Rinse the spray arm thoroughly under running water.

Inserting the upper spray arm

- Refit the upper spray arm and tighten it by hand.

Inserting the middle spray arm

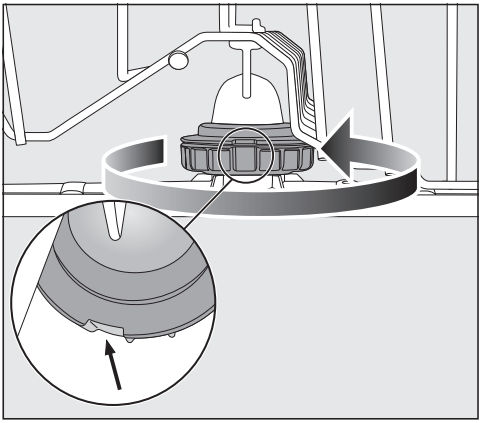

- Replace the middle spray arm and turn the screw thread counterclockwise (view from above) until it engages. Make sure that the recesses in the lock line up.

Inserting the lower spray arm

- Refit the lower spray arm and ensure that the filter combination lies flat in the base of the wash cabinet.

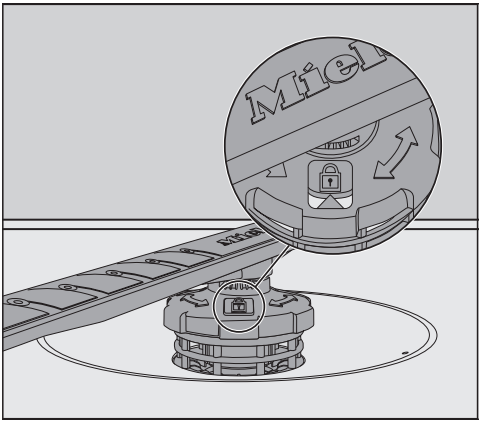

- Rotate the screw thread of the lower spray arm clockwise (view from above) until the arrow in the viewing window points to the lock symbol 🔒.
- Make sure the spray arms can rotate freely.

⚠ Damage due to soiling entering the circulation system.
The lower spray arm is used to secure the filter combination. Without filters, coarse soiling can enter the circulation system and cause a blockage.
Do not run a wash program without the lower spray arm or without the filters.

Inserting the cutlery tray (if present)

- Slide the cutlery tray back onto the rails from the front.
- Replace the safety clips in the rails on both sides of the cutlery tray.

Checking the filters in the wash cabinet

The filter combination in the base of the wash cabinet retains coarse soil from the suds solution. This prevents soiling getting into the circulation system and re-entering the wash cabinet through the spray arms.

⚠ Damage due to soiling entering the circulation system.

Without filters, soiling can enter the circulation system and cause a blockage.

Do not run a wash program without the lower spray arm or without the filters.

When cleaning the filters and spray arms, make sure that coarse soiling cannot get into the circulation system.

Filters can become blocked by soiling which collects over time. The level of soiling and time it takes before the filters need cleaning will vary depending on use.

- Monitor the condition of the filter combination regularly and clean it if necessary.

Cleaning the filters

- Switch the dishwasher off.
- Remove the lower spray arm (see “Cleaning the spray arms” under “Cleaning and care”).
- Before removing the filter combination, remove any coarse soiling to prevent it from entering the circulation system.

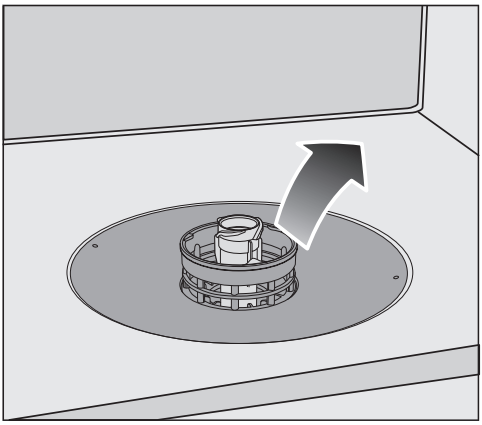

- Remove the filter combination.

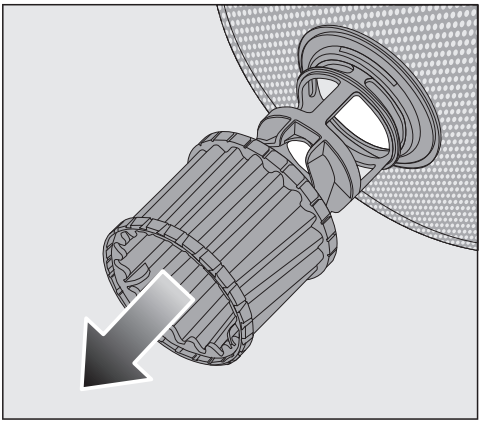

- In order to clean the inside of the filter, pull the microfilter on the plastic ring downwards and away from the filter combination.
- Rinse all the filters under running water.
  If necessary, use a soft cleaning brush to remove soiling.
- Insert the microfilter back into the filter combination.
- Replace the filter combination so that it lies flat in the base of the wash cabinet.
- Refit the lower spray arm to the filter combination using the screw thread.

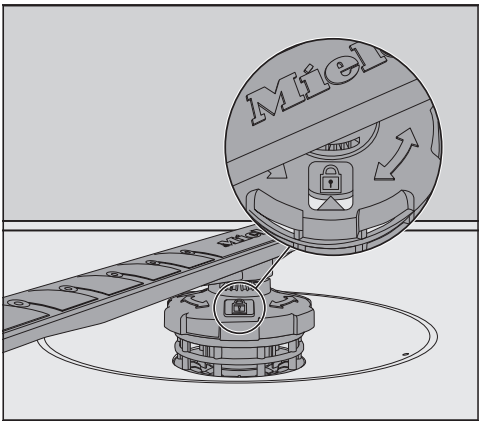

- Rotate the screw thread clockwise until the arrow in the viewing window points to the lock symbol 🔒.

⚠ Damage due to soiling entering the circulation system.

The lower spray arm is used to secure the filter combination. Without filters, coarse soiling can enter the circulation system and cause a blockage.

Do not run a wash program without the lower spray arm or without the filters.

Cleaning the drain pump

If water remains in the wash cabinet after the end of a program, the water has not been pumped away. The drain pump may be blocked by foreign objects. These foreign objects are easy to remove.

- Disconnect the dishwasher from the power supply.
  To do this, turn off the dishwasher and withdraw the plug.
- Take the filter combination out of the wash cabinet (see “Cleaning the filters” under “Cleaning and care”).
- Scoop the water out of the wash cabinet using a small container.

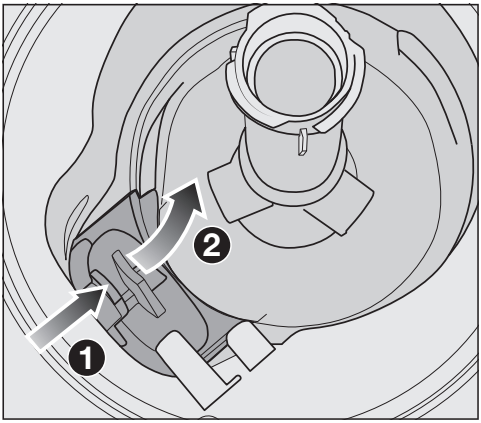

- Press the catch of the drain pump cover inwards ①.
- Tip the cover inwards until it is released ②.
- Rinse the cover thoroughly under running water and remove all foreign objects.

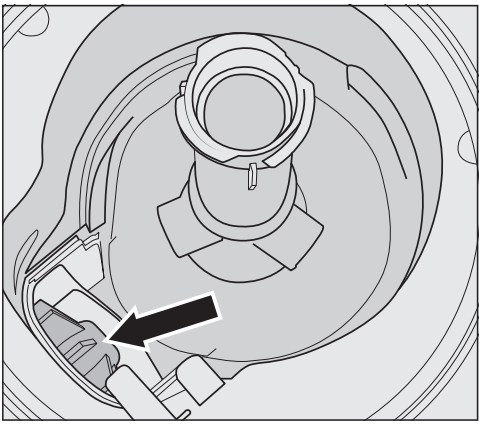

The drain pump (see arrow) is underneath the cover.

⚠ Risk of injury from glass splinters.
It is especially difficult to see glass splinters in the drain pump.
Take care when cleaning the drain pump.

- Carefully remove all foreign objects from the drain pump. Turn the drain pump impeller by hand to check that there are no more obstructions. You will feel a little resistance when you turn the impeller.
- Refit the cover by placing it down vertically from above.

Ensure that the catch engages correctly.

⚠ Damage caused by incorrect cleaning.
The components are delicate and can be damaged during cleaning.
Take care when cleaning the drain pump.

Many malfunctions and errors that can occur in daily operation can be easily remedied. You can save time and money in many cases, as you do not need to contact Miele Customer Service.

Information to help you rectify malfunctions yourself can be found at www.miele.com/service.

The following tables are designed to help you to find the cause of a malfunction or an error and to resolve it.

This section only lists faults that you can remedy yourself. All other faults are shown in ⚠ Fault FXX.

Technical problems

Problem	Possible cause and solution
The control field remains dark after the dishwasher has been turned on with the ⏻ button.	The dishwasher is not plugged in. ■ Insert the plug.
	The circuit breaker has tripped. ■ Reset the circuit breaker (see data plate for the minimum fuse rating). ■ If the circuit breaker trips again, contact Miele Service.
The ⏻ button does not respond immediately or only responds once it has been pressed several times.	Energy management: the door was opened or closed shortly before the ⏻ button was pressed. As a result, the dishwasher was already switched on. The electronics require a few seconds to be ready for operation. ■ Wait a few seconds after opening or closing the door. ■ Then press the ⏻ button.
The dishwasher stops during a program.	The circuit breaker has tripped. The display is dark and the dishwasher cannot be turned on. ■ Reset the circuit breaker (see data plate for the minimum fuse rating). ■ If the circuit breaker trips again, contact Miele Customer Service.

Fault messages

Problem	Possible cause and solution
The display shows a fault number that is not listed below.	There may be a technical fault. ■ Turn the dishwasher off with the ⏻ button. ■ Turn the dishwasher back on after a few seconds. ■ Restart the desired program. If the indicator lights flash again, there is a technical fault. ■ Turn the dishwasher off. ■ Close the faucet. ■ Contact Miele Service.
Fault F70: **The drain pump may still be running, even with the door open.**	The Waterproof system has reacted. ■ Turn the dishwasher off. ■ Close the faucet. ■ Contact Miele Service.
All of the program selection indicator lights are flashing. **Fault number F78 appears in the time display.**	Circulation pump fault. ■ Turn the dishwasher off. ■ Turn the dishwasher back on. ■ Restart the desired program. If the fault message appears again, there is a technical fault. ■ Turn the dishwasher off. ■ Close the faucet. ■ Contact Miele Service.

Door release

Problem	Possible cause and solution
Fault number F33 **appears in the time display.**	The door does not open automatically. There may be a technical fault. ■ Turn the dishwasher off. ■ Open the door manually (see “Opening the door” under “Before using for the first time”) and turn the dishwasher back on again. ■ If the same fault message appears again, contact Miele Service.
	The door locking pins do not retract after the door is opened. There may be a technical fault. ■ Turn the dishwasher back on. ■ If the same fault message appears again, contact Miele Service.

Water intake fault

Problem	Possible cause and solution
The / indicator light flashes on and off. F and 173 appear alternately on the time display.	The faucet is turned off. ■ Turn on the faucet fully.
The dishwasher stops during a program. The / indicator light is flashing. The fault number F12 or F13 appears in the display.	Before remedying the fault: ■ Turn the dishwasher off with the ⏻ button.
	There is a problem with the water intake. ■ Turn on the water supply faucet fully and start the program again. ■ Clean the filter in the water intake (see “Cleaning the filter in the water intake” under “Cleaning and care”). ■ The water connection pressure is lower than 50 kPa. Seek professional advice. ■ The on-site connection for the water drainage may be too low and you will need to vent the water drainage (see “Water drainage” under “Installation”).
The dishwasher stops during a program. Fault number F18 appears in the time display.	A technical fault has occurred. ■ Turn the dishwasher off. ■ Close the faucet. ■ Contact Miele Service.

Water drainage fault

Problem	Possible cause and solution
The dishwasher stops during a program. **The ⚠/⚠ indicator light is flashing.** **Fault number F11 appears in the time display.**	Before remedying the fault: ■ Turn the dishwasher off.
	Water drainage fault. There might be water in the wash cabinet. ■ Clean the filter combination (see “Cleaning the filters” under “Cleaning and care”). ■ Clean the drain pump (see “Cleaning the drain pump” under “Cleaning and care”). ■ Remove any kinks or loops in the drain hose.

General dishwasher problems

Problem	Possible cause and solution
The indicator lights and time display are dark.	The dishwasher has switched off automatically to save energy. ■ Turn the dishwasher on again with the ⏻ button.
Detergent residue is left in the detergent compartment at the end of a program.	The detergent compartment was still damp when detergent was added. ■ Only add the detergent when the detergent compartment is dry.
The detergent compartment lid cannot be closed.	Residual detergent is blocking the catch. ■ Remove the residual detergent.
At the end of a program there is a film of moisture on the inside of the door and possibly on the interior cabinet walls.	This is part of the normal function of the drying system. The moisture will dissipate after a short while.
Water remains in the wash cabinet at the end of a program.	Before remedying the fault: ■ Switch the dishwasher off.
	The filter combination in the wash cabinet is clogged. ■ Clean the filter combination (see “Cleaning the filters” under “Cleaning and care”).
	The drain pump is blocked. ■ Clean the drain pump (see “Cleaning the drain pump” under “Cleaning and care”).
	The drain hose is kinked. ■ Remove any kinks from the drain hose.
Build-up of odours in the wash cabinet	The frequent use of low-temperature wash programs (< 50°C) increases the risk of germs and odours inside the wash cabinet. ■ Regularly run a high-temperature program. This is to prevent the build-up of residues and odours.

Noises

Problem	Possible cause and solution
There is a knocking noise in the wash cabinet.	A spray arm is hitting the dishware. ■ Carefully open the door and rearrange the dishware that is obstructing the spray arm.
There is a rattling noise in the wash cabinet.	Dishware is moving around in the wash cabinet. ■ Carefully open the door and rearrange the dishware so that it sits securely.
	There is a foreign object (e.g., glass shard) in the drain pump. ■ Remove the foreign object from the drain pump (see “Cleaning the drain pump” under “Cleaning and care”).
Knocking noise in the water pipes	This may be caused by the on-site installation or the cross-section of the piping. ■ However, this will not affect the functioning of the dishwasher in any way. If in doubt, contact a plumber.

Poor cleaning results

Problem	Possible cause and solution
The dishes are not clean.	The dishware was not loaded correctly. ■ See notes in “Loading the dishwasher”.
	The program was not powerful enough. ■ Select a more powerful program (see “Program overview”). ■ Activate the Extra clean function (see “Extra clean” under “Options”). ■ Activate the “Second interim rinse” program option (see “Program options”, “Second interim rinse” section).
	Not enough detergent was dispensed during manual detergent dispensing. ■ Use more detergent, or switch to another detergent.
	Items are blocking the path of the spray arms. ■ Carry out a rotation check and if needed rearrange the items so that the spray arms can rotate freely.
	The filter combination in the wash cabinet is not clean or was incorrectly fitted. This may have caused the spray arm jets to become blocked. ■ Clean and/or fit the filter combination correctly. ■ Clean the spray arm jets if necessary (see “Cleaning the spray arms” under “Cleaning and care”).
There are smears on glassware and cutlery. There is a bluish sheen on the surface of glassware. The film can be wiped off.	The rinse aid dosage is set too high. ■ Reduce the dosage (see “Rinse aid” under “Before using for the first time”).

Problem	Possible cause and solution
The dishware is not dry or glasses and cutlery are flecked.	The rinse aid dosage is set too low or the rinse aid reservoir is empty. ■ Replenish the reservoir, increase the dosage, or change the brand of rinse aid (see “Rinse aid” under “Before using for the first time”).
	The dishware was taken out of the wash cabinet too soon. ■ Leave the dishware in for longer (see “Operation” under “Unloading the dishwasher”).
	The duration of the drying phase for the selected program is not sufficient for the dishware (particularly for plastic dishware). ■ Select the Extra Dry program option (see “Extra Dry” under “Options”).
	You have used combination products that have insufficient drying performance. ■ Switch to another detergent or replenish the rinse aid (see “Rinse aid” under “Before using for the first time”).
Glassware has a brown or blue tinge. The film cannot be wiped off.	Ingredients from the detergent have formed a deposit. ■ Switch to another detergent straight away.
Glassware is dull and discoloured. The film cannot be wiped off.	The glassware is not dishwasher-safe. The surface has altered. ■ No remedy. Purchase glassware which is dishwasher safe.
Tea or lipstick stains have not been completely removed.	The wash temperature of the selected program was too low. ■ Select a program with a higher wash temperature.
	The bleaching effect of the detergent is too low. ■ Switch to another detergent.
Plastic parts are discoloured.	Natural dyes, e.g., from carrots, tomatoes, or ketchup may be the cause. The amount of detergent used or its bleaching effect was not sufficient to deal with natural dyes. ■ Use more detergent (see “Detergent”). Parts that are already discoloured will not revert to their original colour.

Problem	Possible cause and solution
White residue is visible on the dishware. Clouding has occurred on glassware and cutlery. The film can be wiped off.	The rinse aid dosage is set too low. ■ Increase the dosage (see “Rinse aid” under “Before using for the first time”).
	The salt reservoir is empty. ■ Fill the salt reservoir (see “Reactivation salt” under “Before using for the first time”).
	The salt reservoir cap has not been screwed on correctly. ■ Replace it, making sure that it screws back on correctly.
	Unsuitable combination detergents were used. ■ Switch to another detergent. If using detergent tabs or powder detergent, do not choose combination products and ensure you refill the reactivation salt and rinse aid.
	The water softener is programmed to too low a water hardness level. ■ Program the water softener to a higher water hardness level (see “Water softener” under “Before using for the first time”).
There are rust stains on cutlery.	The affected items are not corrosion resistant. ■ No remedy. Purchase cutlery which is dishwasher-proof.
	A program was not run after reactivation salt was added. Traces of salt have got into the normal wash cycle. ■ Always run the 65°C *QuickIntenseWash* program with the *Express* program option selected and without any dishware in the dishwasher after adding reactivation salt.
	The salt reservoir cap has not been screwed on correctly. ■ Replace it, making sure that it screws back on correctly.

Information to help you rectify malfunctions yourself and about Miele spare parts can be found at www.miele.com/service.

Contact in the event of a fault

In the event of a fault which you cannot remedy yourself, please contact your Miele dealer or Miele Customer Service.

Contact information for Miele Customer Service can be found at the end of this document.

Please quote the model identifier and serial number of your appliance (SN) when contacting Miele Customer Service. This information can be found on the data plate.

The data plate is located on the right side of the door.

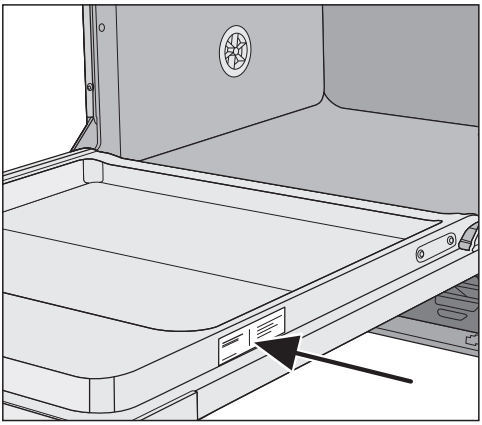

Warranty

For further information, please refer to your warranty booklet.

Optional accessories

Dishwasher detergent, rinse aid, and cleaning and care products are available for this dishwasher, as are optional accessories.
All the products have been designed for Miele appliances.

These and many other useful products can be ordered directly from Miele's online store, Miele Service, or from your Miele dealer.

Detergents

You have chosen excellent quality and performance with your Miele dishwasher. To achieve optimum results all the time, it is important to use the right dishwasher detergents. Not all off-the-shelf products deliver the same results in all dishwashers.
For this reason Miele offers dishwasher products specifically designed for Miele appliances.

Detergent tabs

- Sparkling results even with stubborn food deposits
- Combination product with other functions such as rinse aid, salt, and glass protection additives
- Phosphate free – kind to the environment
- Water-soluble wrapping – no need to unwrap

Rinse aid

- For sparkling glasses
- Helps dishware to dry
- With glass protection formula against corrosion
- Specially designed cap for accurate and easy dispensing

Reactivation salt

- Prevents limescale on dishware and in the appliance
- Extra coarse grained

Appliance care

Miele cleaning and care products provide optimum care for your dishwasher.

Dishwasher cleaner

- For use with the Clean Machine program without detergent dispensing
- Cleans the dishwasher effectively and thoroughly
- Removes grease, bacteria, and associated unpleasant odours
- Ensures excellent dishwashing results

Descaling agent

- Removes heavy limescale deposits
- Mild and gentle with natural citric acid

Dishwasher conditioner

- Removes odours, limescale, and light deposits
- Maintains the elasticity and leak tightness of the seals

Dishwasher freshener

- Neutralizes unpleasant odours
- Fresh, pleasant lime and green tea scent
- Easy and convenient to attach to the dishwasher basket
- Very economical; lasts for 60 rinses

Water inlet

⚠ Risk to health due to wash water.
Water in the dishwasher must not be used as drinking water.
Do not drink any water from the dishwasher.

⚠ Risk to health and risk of damage due to contaminated incoming water.
The quality of the incoming water must correspond to the drinking water specification of the country in which the dishwasher is being operated.
Connect the dishwasher to a drinking water supply.

The dishwasher may be connected to cold or hot water (up to max. 140°F / 60°C) supplies.
We recommend connecting to a cold water connection to reduce energy consumption.
If energy-saving water heating sources, such as solar energy circulation systems, are used, we recommend connecting to the hot water connection. This saves both time and electrical energy costs. Hot water is used in all programs.

The water inlet hose is approximately 5 ft (1.5 m) long. The slightly transparent corrugated hose around the water inlet hose provides protection during transportation and can be removed if necessary. However, the corrugated hose can also be left in place around the water inlet hose to provide additional protection.
A 5 ft (1.5 m) long, flexible metal extension hose (tested to 14,000 kPa / 140 bar) is available as an optional accessory from Miele dealers or Miele Customer Service.

The dishwasher is supplied with a 3/8" supply line and requires an on-site water connection with 3/8" male compression fitting and an accessible shut-off valve. If this type of faucet is not available, only a qualified installer may connect the dishwasher to the domestic water supply.

A backflow preventer is not required. The appliance meets the requirements of the applicable DIN standards.

The water connection pressure needs to be between 50 and 1,000 kPa (7 and 145 psi). If the water connection pressure is too high, a pressure reducing valve must be fitted.

⚠ Risk of damage from leaking water.
The connection point is subject to water pressure. Water leaking from it can cause damage.
You should therefore open the faucet slowly and check for leaks. Correct the position of the seal and screw thread if appropriate.

⚠ Risk of damage due to excessive pressure.
A brief increase in the water pressure can damage components of the dishwasher.
This dishwasher must only be operated when it is connected to a fully vented plumbing system.

⚠ Risk of damage from leaking water.
The water inlet hose is under water pressure.
The water inlet hose must not be shortened or damaged in any way.

⚠ Risk to health and risk of damage due to damaged power cord or water inlet hose
Damage to the power supply cable or water inlet hose can lead to electric shocks or water damage.
Do not place the dishwasher on the water inlet hose. The water inlet hose must be free of kinks and able to move freely after installation. Do not install the water inlet hose or the power cord next to a heat source, such as a hot water pipe. Do not expose the water inlet hose or the power cord to corrosive substances (such as chloride).

Water drainage

The appliance drainage system has a non-return valve, which prevents dirty water from flowing back into the dishwasher via the drain hose.

The dishwasher is supplied with approx. 5 ft (1.5 m) of flexible drain hose with an internal diameter of 7/8" (22 mm).

The hose can be extended using a connection piece to attach a further length of hose. The drainage length must not be longer than 13 ft (4 m) and the delivery head must not exceed 3 ft (1 m).

If the hose is to be directly connected to the drainage outlet on site, use the supplied hose clip (see the installation diagram).

The hose can be directed to the left or the right of the appliance.

The on-site connector for the drain hose can be used for various hose diameters. If the connector extends too far into the drain hose, it must be shortened. Otherwise, the drain hose can become clogged.

The drain hose must not be shortened.

Lay the drain hose so that it does not kink and is not being subjected to pressure or tugged.

⚠ Risk of damage from leaking water.
Leaking water can cause damage.
After servicing the appliance, ensure that the drain does not leak.

Venting the water drainage

If the on-site drainage connection is situated lower than the guide path for the lower basket rollers in the open door, the drainage system must be vented. Otherwise, a siphoning effect during a program can cause the wash cabinet to empty itself of water.

- Open the dishwasher door fully.

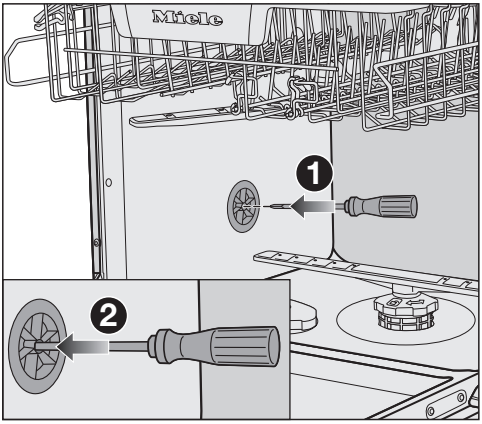

- Remove the lower basket.
- Insert a screwdriver into the middle opening of the vent valve in the left wash cabinet wall ❶.
- Press the screwdriver further into the opening and push it through the membrane ❷ behind.

The vent opening for the water drain is now open.

Electrical connection

⚠ Installation, repairs and other work by unqualified persons could be dangerous.
Check that the voltage, frequency and fuse rating shown on the data plate match the household mains supply.
The power outlet must be accessible after installation. Do not use an extension cord to connect the dishwasher to the mains. Danger of overheating! See data plate on the right side of the door.
A damaged power cord must only be replaced with a genuine Miele cord by a Miele service technician.

Grounding instructions

THIS APPLIANCE MUST BE GROUNDED.

In the event of a malfunction or breakdown, grounding will reduce the risk of electric shock by providing a path of least resistance for the electrical current. This appliance is equipped with a cord having an equipment grounding conductor and a grounding plug. The plug must be plugged into an appropriate outlet that is installed and grounded in accordance with all local codes and ordinances.

⚠ Improper connection of the equipment grounding conductor can result in electric shock.
Do not modify the plug provided with the appliance; if it will not fit the outlet, have a proper outlet installed by a qualified electrician.
If there is any question concerning the proper electrical connection or grounding of this appliance to the powersupply, please consult a licensed electrician or call Miele's Customer Service Department:
USA: 1-888-99-MIELE(64353)
CDN: 1-800-565-6435

Specifications

The dishwasher comes equipped with a 4 ft (1.2 m) power cord (measured from the rear of the dishwasher) with a molded plug for connection to 120 V, 60 Hz, 15 A grounded receptacle.

Hardwired electrical connection
It is possible to hardwire this appliance to an existing power cable.

⚠ CAUTION: Before servicing, disconnect the power supply by either removing the fuse, shutting off the power main or manually "tripping" the circuit breaker.

Installation work and repairs should only be performed by a qualified technician in accordance with all applicable codes and standards. Repairs and service by unqualified persons could be dangerous and the manufacturer cannot be held responsible.

Before connecting the appliance to the power supply, make sure that the voltage and frequency listed on the data plate correspond with the household electrical supply. This data must correspond to prevent machine damage. Consult an electrician if in doubt.

GROUNDING INSTRUCTIONS

THIS APPLIANCE MUST BE GROUNDED.

This appliance must be connected to a grounded metal, permanent wiring system, or an equipment-grounding conductor must be run with the circuit conductors and connected to the equipment-grounding terminal or lead on the appliance.

⚠ Prior to making a hardwire connection to the terminal, remove the powercord. Otherwise there will be a risk of electric shock from the attached plug.

An existing flexible supply cord or cable shall have a minimum thickness of AWG 14.
120 V, 60 Hz, 15 A fuse rating
Black wire (live): connect to L
White wire (neutral): connect to N
Green wire (ground): connect to ⏚

⚠ After attaching the permanent power supply cord, check that all wires are correctly and securely placed in the connector and the strain relief is tightened.

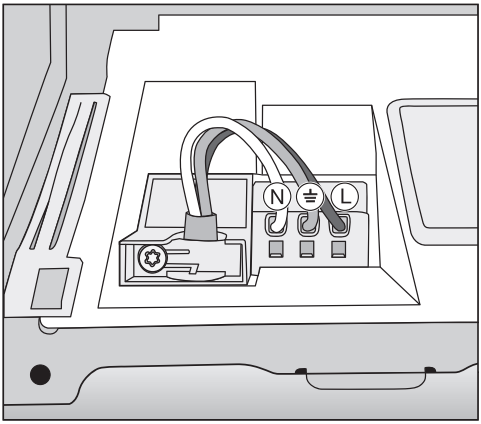

Sound emission testing

Prerequisites for sound emission testing

Load the dishwasher with **16 standard place settings** and use the *Normal* program.

Setup for sound emission testing

The dishwasher must be set up according to the following specifications.

- Install the dishwasher into an analyzing unit.
- Secure the front panel.

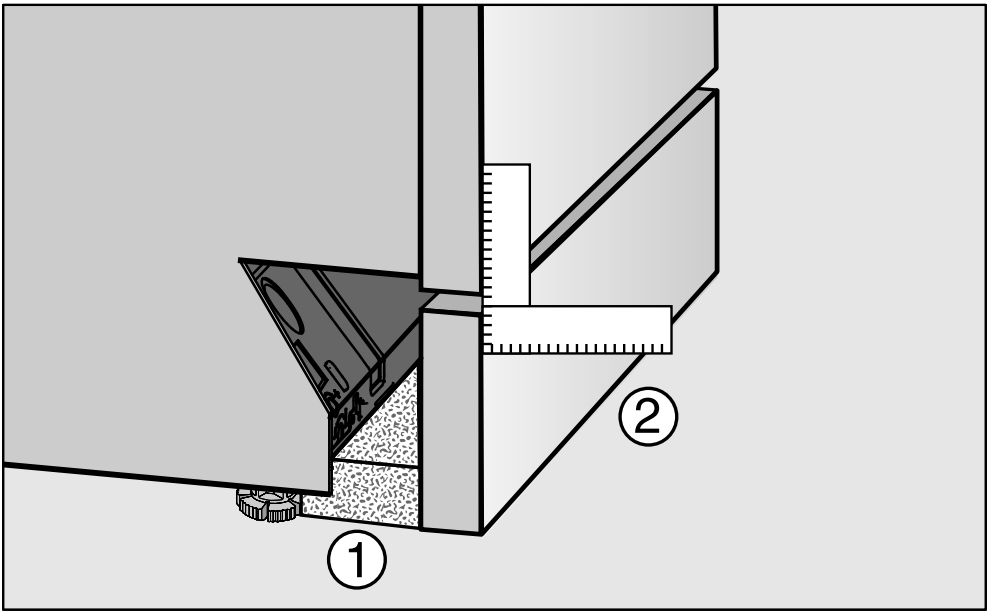

- Push the provided fleece strip (depending on model) under the base until it the fleece strip is flush with the appliance feet ❶.
- Push the base into place in such a way that it is flush with the door panel ❷.

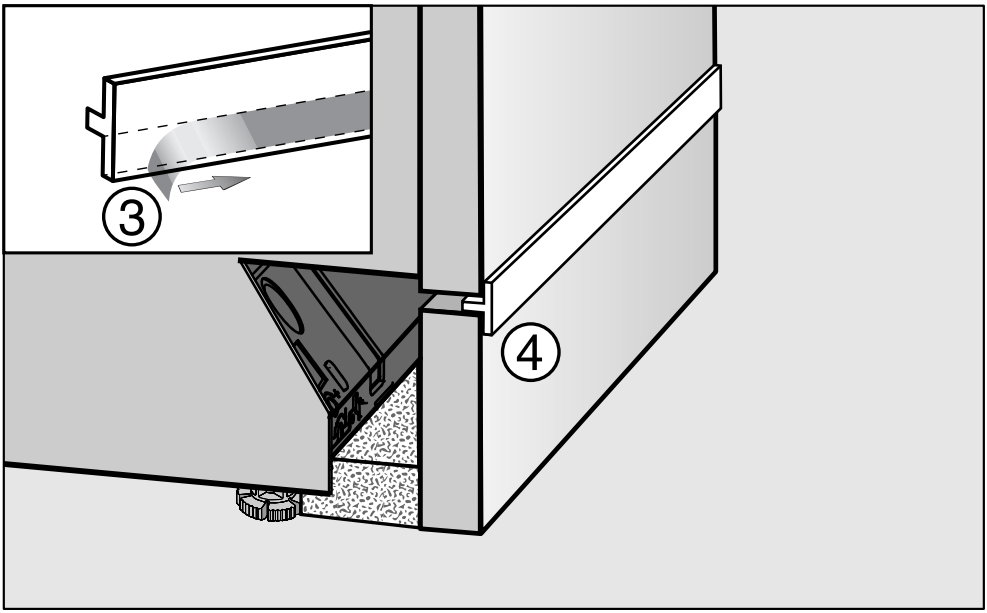

- Remove the protective film from the provided insulating strip (depending on model) ❸.
- Stick the insulating strip onto the front top edge of the base board ❹.

Please have the model and serial number of your appliance available when contacting Customer Service.

Canada

Importer
Miele Limited

Headquarters and Miele Centre
161 Four Valley Drive
Vaughan, ON L4K 4V8
www.miele.ca

Customer Care Centre
Phone: 1-800-565-6435
customercare@miele.ca

Germany
Manufacturer
Miele & Cie. KG
Carl-Miele-Straße 29
33332 Gütersloh

Miele

G 5216

en-CA

M.-Nr. 11 694 152 / 01