Miele

Operating and installation instructions

Freezer

To avoid the risk of accidents or damage to the appliance it is **essential** to read these instructions before it is installed and used for the first time.

en-GB

M.-Nr. 10 999 980

Contents

Warning and Safety instructions 5

Caring for the environment 15

Saving energy 16

Guide to the appliance 18
Ice cube maker with integrated ice cube tray 19

Accessories 21
Accessories supplied 21
Side-by-side fitting kit 21
Optional accessories 21

Before using for the first time 23
Before using for the first time 23
Cleaning the appliance 23
Connecting the appliance 23

Switching on and off 24
Touch display 24
Switching the appliance on 24
Start screen 25
Switching off the refrigeration appliance 25
Switching off for longer periods of time 26

The correct temperature 27
Temperature display 27
Setting the temperature 28
Temperature range 28

Using Super freeze 29
Super freeze function ❄ 29
Switching SuperFreeze on and off 29
Displaying the SuperFreeze function 29

Temperature and door alarm 30
Temperature alarm 30
Door alarm 31

Selecting further settings 33
Settings overview 33

Explanation of the different Settings 35
Using the minute minder (QuickCool timer) 35
Switching the ice cube maker on and off 36
Activating or deactivating the safety lock 38
Switching the refrigeration appliance off 38
Switching Sabbath mode on/off 39
Setting the time before the door alarm is triggered 40
Switching the sensor tone on / off 40
Setting the volume/Switching alarms and audible tones on/off 40
Setting the display brightness 41
Setting the temperature unit °C/°F 41
Switching Demo mode off 41
Resetting to the factory default settings 41
Accessing information 41
Clean ventilation grille reminder 42

Freezing and storing food 43
Maximum freezing capacity 43
Freezing fresh food 43
Storing frozen food 43
Home freezing 44
Before placing food in the appliance 45
Storage time for frozen food 46
Defrosting frozen goods 46
Making ice cubes 47
Switching the ice cube maker on and off 47
Using accessories 48
Freezer tray 48
Adjusting the interior fittings 49
Removing freezer drawers on telescopic runners 49

Automatic defrosting 50

Cleaning and care 51
Cleaning agents 51
Cleaning the ice cube tray 52
Preparing the refrigeration appliance for cleaning 53
Removing the telescopic runners 53
Cleaning the interior and accessories 54
Cleaning the front of the appliance and the side panels 54
Cleaning the ventilation grille 55
Cleaning the door seal 55
Starting up the appliance after cleaning 55

Contents

Problem solving guide 56

Noises 69

Service 70
Contact in the event of a fault 70
– Displaying licence agreements 70
EPREL database 70
Warranty 70

Installation 71
Installation 71
Ventilation 72
Fitting supplied wall spacers 72
Limiting the opening angle of the appliance door 73
Installing the refrigeration appliance 75
Levelling the appliance door 76
Installing the appliance in a run of kitchen units 76
Appliance dimensions 78
Installing in a side-by-side combination 79
Changing the door hinging 88
Aligning the appliance doors 99
Mains water connection 100
Information about the mains water connection 100
Water supply 101
Electrical connection 103

This refrigeration appliance complies with current safety requirements. Inappropriate use can, however, lead to personal injury and material damage.

Please read the operating and installation instructions carefully before using the refrigeration appliance for the first time. They contain important information on safety, installation, use and maintenance. This is to protect yourself from injury, and from damaging your refrigeration appliance.

In accordance with standard IEC 60335-1, Miele expressly and strongly advises that you read and follow all information provided on installing the refrigeration appliance, as well as the safety notes and warnings.

Miele cannot be held liable for injury or damage caused by non-compliance with these instructions.

Keep these operating and installation instructions in a safe place and pass them on to any future owner.

Correct application

▶ This refrigeration appliance is intended for use in the home and in similar environments, for example
– in shops, offices and similar work settings
– by the guests in hotels, motels, bed & breakfasts and other typical home settings.
This refrigeration appliance is not intended for outdoor use.

▶ It must only be used as a domestic appliance to store deep frozen food, freeze fresh food and to make ice.
Any other usage is not supported by the manufacturer and could be dangerous.

▶ This refrigeration appliance is not suitable for storing and keeping cool medicines, blood plasma, laboratory preparations or similar substances or products that are subject to the Medical Device Directive. Incorrect use of the refrigeration appliance for such purposes may cause deterioration of the items stored. The refrigeration appliance is also not suitable for use in areas where there is a risk of explosion.
Miele cannot be held liable for damage caused by improper or incorrect use or operation of the appliance.

▶ The appliance can only be used by people with reduced physical, sensory or mental capabilities, or lack of experience and knowledge, if they are supervised whilst using it, or have been shown how to use it in a safe way and recognise and understand the consequences of incorrect operation.

Safety with children

▶ Children under 8 years of age must be kept away from the refrigeration appliance unless they are constantly supervised.

▶ Children 8 years and older may only use the appliance unsupervised if they have been shown how to use it in a safe way and recognise and understand the consequences of incorrect operation.

▶ Children must not be allowed to clean or maintain the appliance unsupervised.

▶ Please supervise children in the vicinity of the appliance and do not let them play with it.

▶ Danger of suffocation! Whilst playing, children could become entangled in packaging (such as plastic wrapping) or pull it over their head and suffocate. Keep packaging material away from children.

Technical safety

▶ The coolant circuit has been checked for leaks. The refrigeration appliance complies with statutory safety requirements and the appropriate EU directives.

▶ This refrigeration appliance contains the refrigerant isobutane (R600a), a natural gas which is environmentally friendly but flammable. The refrigerant does not damage the ozone layer and does not contribute to the greenhouse effect.
The use of this refrigerant has, however, led to a slight increase in the noise level of the appliance. In addition to the noise of the compressor, you might be able to hear the refrigerant flowing around the cooling circuit. Unfortunately, this cannot be avoided, but it does not affect the performance of the refrigeration appliance.
When transporting and installing the refrigeration appliance, ensure that no parts of the cooling circuit are damaged. Splashes of refrigerant can damage the eyes.
In the event of damage:

- Avoid naked flames or anything which creates a spark.
- Disconnect the refrigeration appliance from the mains electricity supply.
- Ventilate the room where the refrigeration appliance is located for several minutes.
- Contact the Miele Customer Service Department.

▶ The more coolant there is in a refrigeration appliance, the larger the room it should be installed in. In the event of a leakage, if the appliance is in a small room, there is the danger of a combustible gas/air mixture building up. For every 11 g of coolant at least 1 m^3 of room space is required. The amount of coolant in the refrigeration appliance is stated on the data plate inside the appliance.

▶ To avoid the risk of damage to the appliance, make sure that the connection data (fuse rating, frequency and voltage) on the data plate corresponds to the household supply.
Check that this is the case before connecting the appliance. Consult a qualified electrician if in any doubt.

▶ The electrical safety of this appliance can only be guaranteed when correctly earthed. It is essential that this standard safety requirement is met. If in any doubt please have the electrical installation tested by a qualified electrician.

▶ Reliable and safe operation of this appliance can only be assured if it has been connected to the mains electricity supply.

▶ If the electrical connection cable supplied is damaged, it must only be replaced by an original spare part to prevent a hazard for the user. Miele can only guarantee the safety of the appliance when original Miele spare parts are used.

▶ Do not connect the appliance to the mains electrical supply by a multi-socket adapter or extension lead. These are a fire hazard and do not guarantee the required safety of the appliance.

▶ If moisture gets into electrical components or into the mains connection cable, it could cause a short circuit. Therefore, do not operate this refrigeration appliance in areas which are exposed to moisture (e.g in a garage or utility room).

▶ This appliance must not be used in a non-stationary location (e.g. on a ship).

▶ Do not use a damaged appliance. It could be dangerous. Check the appliance for visible signs of damage.

▶ This refrigeration appliance is not intended for use as a built-in appliance.

▶ The appliance must be disconnected from the power supply during installation, maintenance and repair work, and during installation work on the mains water connection. It is only completely isolated from the power supply when:

- the mains fuses are switched off, or
- the screw-out fuse is removed (where applicable), or
- the mains cable has been unplugged. Pull on the plug and not the cable when disconnecting it from the power supply.

▶ Unauthorised installation, maintenance and repairs, or a faulty mains water connection can cause considerable danger for the user. Installation, maintenance and repairs, installation work on the mains water connection, and all repairs on the ice/water outlet must only ever be carried out by a Miele-authorised technician.

▶ The ice-cube maker must only be connected to a cold water supply.

▶ Miele cannot be held liable for damage caused by a faulty mains water connection.

▶ While the appliance is under warranty, repairs should only be undertaken by a Miele authorised service technician. Otherwise the warranty is invalidated.

▶ Faulty components must only be replaced with genuine Miele original spare parts. Miele can only guarantee the safety standards of the appliance when Miele replacement parts are used.

▶ In areas which may be subject to infestation by cockroaches or other vermin, pay particular attention to keeping the appliance and its surroundings clean at all times. Any damage caused by cockroaches or other vermin will not be covered by the warranty.

▶ This refrigeration appliance is supplied with a special lamp to cope with particular conditions (e.g. temperature, moisture, chemical resistance, abrasion resistance and vibration). This lamp must only be used for the purpose for which it is intended. The lamp is not suitable for room lighting. Replacement lamps may only be fitted by a Miele authorised technician or by the Miele Customer Service Department. This refrigeration appliance contains several light sources with at least energy efficiency class G.

Correct use

▶ This refrigeration appliance is designed for use within specific ambient temperatures (climate range). Do not use in ambient temperatures for which it is not designed. The climate range is stated on the data plate in the interior cabinet of the refrigeration appliance. A lower ambient temperature will cause the compressor to switch off for longer periods, meaning that the refrigeration appliance is unable to maintain the required temperature.

▶ Do not cover or block the air vents as this could impair the efficiency of the appliance, increase the electricity consumption and could cause damage to the components.

▶ If storing food which contains a lot of fat or oil in the appliance or the door, make sure that it does not come into contact with plastic components as this could cause stress cracks or break the plastic.

▶ Risk of fire and explosion. Do not store explosive materials in the refrigeration appliance or any products containing propellants (e.g. spray cans). Electrical components can cause flammable mixes of gases to ignite.

▶ Danger of explosion. Do not operate any electrical equipment (e.g. an electric ice-cream maker) inside the refrigeration appliance. Danger of sparking and explosion.

▶ Danger of injury and damage to the appliance. Do not store cans or bottles containing carbonated drinks or liquids which could freeze in the freezer zone. Otherwise they could burst.

▶ Danger of injury and damage to the appliance. When cooling drinks quickly in the freezer zone, make sure bottles are not left in for more than one hour. Otherwise they could burst.

▶ Danger of injury. Never handle frozen food or the metal parts of the appliance with wet hands. Your hands may freeze to the frozen food or to the metal.

▶ Danger of injury. Do not take ice cubes out with your bare hands and never place ice cubes or ice lollies in your mouth straight from the freezer zone. The very low temperature of the frozen food can cause frost burn to the lips and tongue.

▶ Do not refreeze partially or fully defrosted food. Consume defrosted food as soon as possible, as it will lose its nutritional value and spoil if left for too long. Defrosted food may only be re-frozen after it has been cooked.

▶ Observe the manufacturer's “use-by” dates and storage instructions given on food to avoid the risk of food poisoning. Storage times will depend on several factors, including the freshness and quality of the food, as well as the temperature at which it is stored.

Stainless steel appliances

▶ Adhesives will damage the stainless steel surface and cause it to lose its dirt-repellent protective coating. Do not use sticky notes, transparent adhesive tape, masking tape or other types of adhesive on the stainless steel surface.

▶ The surface is susceptible to scratching. Even magnets can cause scratching.

Accessories and spare parts

▶ Only use genuine original Miele accessories and spare parts with this appliance. Using accessories or spare parts from other manufacturers will invalidate the warranty, and Miele cannot accept liability.

▶ Miele will guarantee to supply functional spare parts for a minimum of 10 years and up to 15 years following the discontinuation of your refrigeration appliance.

Cleaning and care

▶ Throw away the first 3 batches of ice to rinse the ice cube maker and the water pipes. Do this:

- before using for the first time
- if the ice cube maker has not been used for a long time
- regularly when in continuous use (at least once a month) to remove ice residues from the system (to avoid a blockage of the water supply)
- before switching off the ice cube maker for a long period of time

▶ Do not use any oils or grease on the door seals, as these will cause the seals to deteriorate and become porous with time.

▶ Do not use a steam cleaning appliance to clean or defrost this appliance.
Steam could reach electrical components and cause a short circuit.

▶ Sharp edged or pointed objects will damage the evaporator, causing irreversible damage to the appliance. Do not use sharp edged or pointed objects to

- remove frost and ice,
- separate frozen food or remove ice trays.

▶ Do not place electric heaters or candles in the appliance to defrost it. These can damage the plastic parts.

▶ Do not use defrosting sprays or de-icers, as they could contain substances which could damage the plastic parts or which might cause the build-up of gases and pose a danger to health.

Transport

▶ Always transport the appliance in an upright position and in its original transport packaging to avoid damage in transit.

▶ Danger of injury and damage to the appliance. The refrigeration appliance is very heavy and must be transported by two people.

Disposal of your old appliance

▶ If your old refrigeration appliance has a door lock, destroy it. This will prevent the risk of children playing accidentally locking themselves in and endangering their lives.

▶ Splashes of coolant can damage the eyes. Be careful not to damage any part of the pipework whilst awaiting disposal, e.g. by

- puncturing the coolant channels in the condenser,
- bending any pipework, or
- scratching the surface coating.

Disposal of the packing material

The packaging is designed to protect the appliance from damage during transportation. The packaging materials used are selected from materials which are environmentally friendly for disposal and should be recycled.

Recycling the packaging reduces the use of raw materials in the manufacturing process and also reduces the amount of waste in landfill sites.

Disposing of your old appliance

Electronic and electrical appliances contain many valuable materials. They also contain certain materials, compounds and components which were essential for their correct functioning and safety. These could be hazardous to your health and to the environment if disposed of with general waste or if handled incorrectly. Please do not, therefore, dispose of your old appliance with general waste.

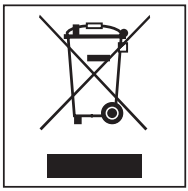

Instead, please make use of officially designated collection and disposal points to dispose of and recycle electrical and electronic appliances in your local community, with your dealer or with Miele. By law, you are solely responsible for deleting any personal data from the appliance prior to disposal.

Take care not to damage your refrigeration appliance's pipework before or during transportation to an authorised collection depot.
This is to ensure that coolant in the cooling circuit and oil in the compressor is contained, and will not leak into the environment.

Please ensure that your old appliance poses no risk to children while being stored prior to disposal. For further information, see "Warning and Safety instructions" in these operating and installation instructions.

Saving energy

	Normal energy consumption	Increased energy consumption
Installation / Maintenance	In a ventilated room.	In an enclosed, unventilated room.
	Protected from direct sunlight.	In direct sunlight.
	Not near to a heat source (radiator, oven).	Near to a heat source (radiator, oven).
	Where the ideal ambient room temperature is approx. 20 °C.	Where the ambient room temperature is above 25 °C.
	Ventilation gaps uncovered and dusted regularly.	Ventilation gaps covered or dusty.
Temperature setting	Freezer section -18 °C	The lower the temperature in the appliance, the higher the energy consumption.

	Normal energy consumption	Increased energy consumption
Use	Drawers and shelves arranged as they were when the appliance was delivered.	
	Only open the door when necessary and for as short a time as possible. Store food in an organised way.	Frequent opening of doors for long periods will cause a loss of coldness. The appliance will try to cool down and the compressor will run for longer periods.
	Take an insulated cool bag when shopping, and load food in the appliance as soon as possible. Allow hot food and drinks to cool down before placing them in the appliance.	Hot food or food at room temperature raises the temperature inside the appliance. The appliance will try to cool down and the compressor will run for longer periods.
	Store food well packaged.	The evaporation or condensation of liquids in the freezer zone will cause a loss of coldness.
	Do not over-fill the appliance to allow air to circulate.	Poor air circulation will cause a loss of coldness.

Guide to the appliance

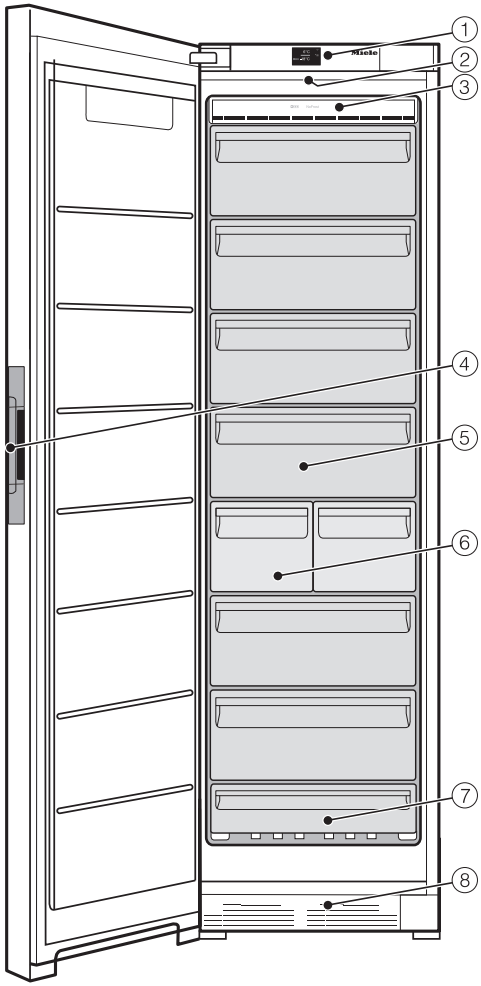

① Control panel with display

② Interior lighting

③ NoFrost module

④ Recessed handle with door opening aid (Click2open)

⑤ Freezer drawers

⑥ Ice cube drawer with automatic ice cube maker

⑦ Lowest freezer drawer, can also be used as a freezing tray

⑧ Ventilation grille

For easier installation there are transport handles on the back at the top and transport wheels underneath the appliance.

Ice cube maker with integrated ice cube tray

For the automatic ice cube maker to operate, it must be connected to a mains water supply (see “Mains water connection”).

The ice cube maker can be turned off independently of the refrigeration appliance if you do not want to make any ice cubes.

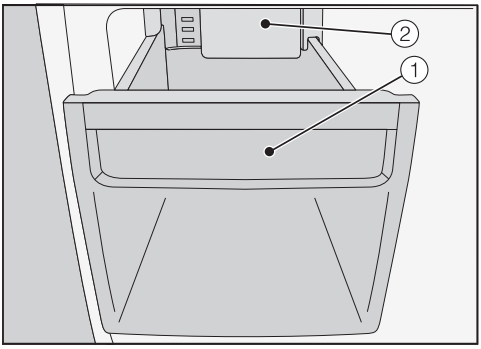

The automatic ice cube maker ① is located in the ice cube drawer ②.

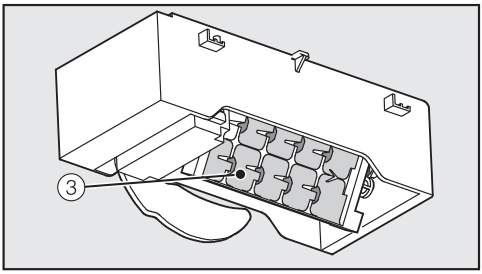

An ice cube tray ②, in which the ice cubes are produced, is integrated in the ice cube maker ③. This ice cube tray cannot be removed.

The ice cube tray automatically empties into the drawer as soon as ice cubes are produced.

The ice cube maker is switched on via Settings mode ‣≡ (see “Selecting further settings” – Switching the ice cube maker on and off”).

Symbols on the display

Controls

Symbol		Meaning
⏻	Standby	For switching the refrigeration appliance on
▸≡	Settings mode	For selecting settings (see “Selecting further settings”)
–/+	Minus/plus	For altering a setting (e.g. temperature)
OK		For confirming a setting
</>	Left/right navigation arrow	For scrolling in Settings mode to select a setting
↩	Back	For exiting a menu

Information

Symbol		Meaning
⏻	Standby	The appliance is connected to the power supply but is not switched on.
❄***	Freezer section	Identifies the freezer section temperature display
❄	SuperFreeze	Function can be selected (see “Using Super freeze”).
🌡⚠	Temperature alarm	Warning (see “Problem solving guide - Display warnings”).
🚪⚠	Door alarm	Warning (see “Problem solving guide - Display warnings”).
⚠	Power failure	Warning (see “Problem solving guide - Display warnings”).

Accessories supplied

Cool pack

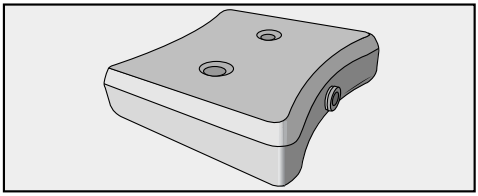

The cool pack prevents the temperature in the freezer section from rising too quickly in the event of a power cut. This can help prolong the storage life.

The cool pack will be at its most effective after it has been in the freezer for approx. 24 hours.

Door opening angle limiter

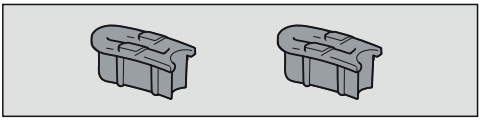

The door hinges are set ex works to enable the door to be opened up to 115°. If the appliance door hits an adjacent wall when opened, for example, the opening angle can be limited to approx. 90°.

Side-by-side fitting kit

For installing two appliances next to each other.

Optional accessories

A range of useful Miele accessories and care products are available for your appliance.

Accessories are available to order via the Miele Webshop, from Miele directly (see back cover for contact details) or from your Miele dealer.

Multi-purpose microfibre cloth

The microfibre cloth is suitable for removing fingerprints and light soiling from surfaces such as stainless steel, glass, plastic and chrome without the use of chemicals.

MicroCloth Kit

The MicroCloth Kit contains a universal cloth, a glass cloth and a polishing cloth.
These cloths are extremely resistant to tearing and very robust. Thanks to very fine microfibres these cloths achieve an excellent cleaning performance.

XKS 3100 W WiFi stick (Miele@home)

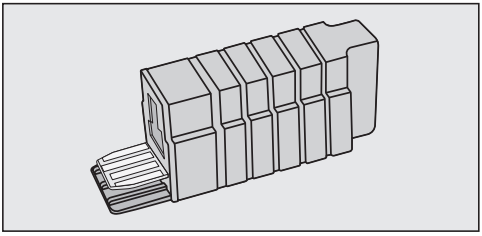

The WiFi stick enables your refrigeration appliance to communicate, so that you can access appliance data at any time with a smartphone or tablet (iOS® or Android™ operating systems).

To use the Miele@mobile app or Miele@home features, such as the option to switch on SuperCool/SuperFreeze, you must insert the WiFi stick into your Miele refrigeration appliance and connect it to your WiFi network.

Fitting and installation instructions for the stick are supplied with it and describe how to install the WiFi stick and connect to a WiFi network.

Before using for the first time

Packaging material

- Remove all packaging material from the inside of the appliance.

Protective foil

The appliance is covered with a special foil to protect it during transportation.

- Do not remove the foil until the appliance has been positioned in its final location.

Cleaning the appliance

Please refer to the relevant instructions in “Cleaning and care”.

- Clean the inside of the appliance and the accessories.

Throw away the first 3 batches of ice cubes made after the ice-cube maker is started up, as the water will have been used for the initial rinsing of the water supply line.

- Clean the ice-cube maker.

Connecting the appliance

- Connect the appliance to the electricity supply as described in “Electrical connection”.

Standby

⏻ will appear in the display.

Touch display

Using pointed or sharp objects on the touch display can damage it.

Only touch the display with your fingers.

If your fingers are cold, the touch display may not react.

Switching the appliance on

To enable the temperature to get sufficiently cold inside the appliance, allow the appliance to run for approx.
4 hours before placing food in it.
Do not place food in the freezer until it has reached the required coldness (at least -18 °C).

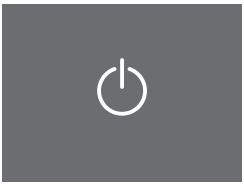

Standby

■ Touch ⏻ briefly.

The welcome message
Miele - Willkommen will appear in the display for approx. 3 seconds.

If this does not happen and 🔒 appears in the display, the safety lock is still activated (see “Selecting further settings” - “Activating or deactivating the safety lock” - “Deactivating the safety lock temporarily”).

Start screen

The display changes to the start screen.

The interior light comes on. The appliance is now switched on and will start to cool. It will gradually reach the preset temperature of -18 °C.

Start screen

The start screen is the screen from which all settings can be selected.

The display is divided into two fields for this purpose:

The temperature display is on the left-hand side.

This is also identified by ❄❄❄.

Here you can set or change the temperature as well as select the Super freeze ❄ function (see “Using Super freeze”).

Settings mode ▸≡ is on the right-hand side.

Touch the ▸≡ symbol to access Settings mode. Here further settings can be selected (see “Selecting further settings”).

Switching off the refrigeration appliance

You can switch the refrigeration appliance off in Settings mode (see “Selecting further settings”).

Status display

■ Touch ▸≡.

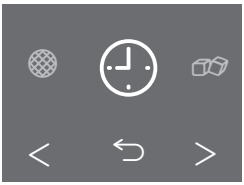

Settings mode

■ Use the < or > arrow buttons until ⏻ is displayed.

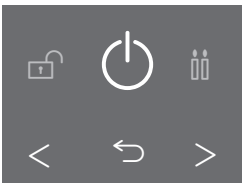

Switching off the refrigeration appliance

■ Touch ⏻.

The temperature display goes out and ⏻ lights up.

The interior lighting goes out and cooling is turned off.

⏻ will go out after approx. 10 minutes. The display goes dark and switches to energy-saving mode.

Switching off for longer periods of time

If, during a long absence, the refrigeration appliance is switched off but not cleaned and the door(s) left shut, there is a risk of mould forming inside the appliance.

It is essential to clean the refrigeration appliance.

If the refrigeration appliance is not going to be used for a longer period of time, observe the following:

- Switch the refrigeration appliance off.
- Switch the appliance off at the wall socket and pull the plug out of the socket, or disconnect the fuse.
- Empty the ice cube drawer.

⚠ Risk of damage to the ice cube maker.

If the water inlet is blocked while the ice cube maker is still in use, the water inlet pipe can freeze up.

Turn the ice cube maker off if the water inlet is turned off (e.g. while on holiday).

- Close the stopcock for the water inlet.
- Clean the refrigeration appliance and leave the door ajar to air the appliance and avoid odours building up inside.

It is very important to set the correct temperature for storing food in the appliance. Bacteria will cause food which is not stored at the correct temperature to deteriorate rapidly. Temperature influences the growth rate of these bacteria. Reducing the temperature reduces their growth rate.

To freeze fresh food and to store frozen food for long periods, a temperature of **-18 °C** is required. At this temperature the growth of bacteria is generally halted. As soon as the temperature rises above -10 °C, the bacteria become active in the food again so it cannot be kept as long. For this reason, partially defrosted or defrosted food must not be re-frozen. Food may be re-frozen once it has been cooked, as the high temperatures achieved when cooking destroy most bacteria.

The temperature in the refrigeration appliance will rise:

- The more often the appliance door is opened and the longer it is kept open.
- The more food is stored in it.
- The warmer the food is which is being put into it.
- The higher the ambient temperature surrounding the refrigeration appliance. This refrigeration appliance is designed for use within specific ambient temperatures (climate range). Do not use in ambient temperatures for which it is not designed.

Temperature display

Status display

In normal operation, the refrigeration appliance temperature display shows **the lowest temperature in the freezer**.

Depending on the ambient temperature and the temperature setting, it can take the appliance a few hours to reach the temperature required and for this temperature to then be shown as a constant temperature in the display.

Setting the temperature

- Touch the temperature display.

The previously set temperature will appear.

- Use the — and + arrows to set the temperature higher or lower.
- Touch OK immediately after setting the temperature to confirm your entry.
- Or wait approximately 8 seconds after the last touch of a sensor. The temperature will then be automatically adopted.

Tip: The newly set temperature can also be confirmed and adopted by closing the appliance door.

The temperature display will then change to the current temperature in the appliance.

Temperature range

The temperature can be adjusted from -14 °C to -28 °C.

Tip: If you have adjusted the temperature, **wait for approx. 6 hours if the appliance is not very full and for approx. 24 hours if the appliance is full** before checking the temperature display. It will take this long for the appliance to give an accurate reading.

- If, after this time, the temperature is still too high or too low, you will need to adjust it again.

The Super freeze ❄ function can also be switched on.

Super freeze function ❄

For optimum results switch on the Super freeze function before putting fresh food into the freezer section. This helps food to freeze quickly and retain its nutrients, vitamins, flavours and appearance.

Exceptions:

- When placing food in the freezer that is already frozen
- When freezing up to 1 kg of fresh food daily

The SuperFreeze function should be switched on **6 hours before placing food in the freezer section**.
When freezing the **maximum amount of food** the SuperFreeze function should be switched on **24 hours beforehand**.

When SuperFreeze is switched on, the appliance will work at full power to lower the temperature in the freezer.

The SuperFreeze function will switch itself off automatically after approx. 65 hours. The quantity of fresh food placed in the freezer will determine the time before the SuperFreeze function turns off.

Tip: To save energy, you can manually switch off SuperFreeze once the freezer reaches a **constant** temperature of -18 °C or colder. Monitor the temperature in the freezer section.

When SuperFreeze is switched off, the appliance will run at normal power again.

Switching SuperFreeze on and off

■ Touch the temperature display.

Display – SuperFreeze

The current temperature and ❄ appear in the display.

■ Touch ❄.

- If ❄ lights up orange, the function is selected.
- If ❄ lights up white, the function is deselected.

■ Touch OK to confirm your entry.

■ Or wait approximately 8 seconds after the last press of a button. The setting will then be automatically adopted.

The SuperFreeze function is switched on or off.

> The function that has been switched on **is not** shown in the status display.
>
> If SuperFreeze was previously switched on it will be switched off following an interruption to the power supply.

Displaying the SuperFreeze function

■ Touch the temperature display.

The current temperature appears on the display. ❄ lights up orange.

Temperature and door alarm

The appliance has been fitted with a warning system which ensures that the temperature in the freezer cannot rise unnoticed and to avoid energy being wasted if the door is left open.

Temperature alarm

⚠ Health risk caused by decomposing food.

If the temperature in the freezer remains above -18 °C for a long time, the frozen goods can start to defrost. This will reduce the storage life of the food.

Check whether the frozen goods have started to defrost. If they have, check that the food is safe to use and if it is, then use it as soon as possible or cook it before freezing it again.

If the temperature in the freezer becomes too warm, 🌡⚠ will light up red in the temperature display. An alarm will also sound until the cause of the alarm is rectified or the alarm is switched off.

The temperature the refrigeration appliance is set at determines the temperature the appliance recognises as being too warm.

The temperature alarm is only displayed on the status display and not when selecting a setting.

A temperature alarm is displayed before an existing door alarm.

The audible and visual signals will be activated if:

- You switch on the refrigeration appliance and the temperature in a temperature zone differs greatly from the set temperature.
- A lot of warm room air enters the freezer when you are rearranging or taking out frozen goods.
- You are freezing large amounts of food at once.
- You are freezing warm food.
- There was a mains outage.
- The refrigeration appliance has a fault.

The alarm will stop and 🌡⚠ will go out as soon as the temperature has dropped down to the correct level again.

Switching the temperature alarm off early and checking the warmest temperature

If the noise disturbs you, you can switch the alarm off if you wish. You can also find out what the warmest temperature was in the freezer.

■ Touch 🌡⚠.

The fault message is confirmed, and the alarm will stop. The start screen appears in the display: the warmest temperature recorded in the freezer will flash for about 1 minute in the display. Then the temperature display will change to the current temperature in the freezer.

You can exit from the flashing temperature display early:

■ Touch the temperature display.

The warmest temperature displayed will disappear. The display will then revert to showing the current temperature in the freezer.

Door alarm

The refrigeration appliance is fitted with a warning system to avoid increased energy consumption and prevent stored food becoming warm if the door is left open.

If the appliance door is left open for a longer period of time, ⚠ will light up yellow in the temperature display. An audible alarm will also sound.

The amount of time until the door alarm is triggered depends on the setting selected (factory default setting = 1 minute) and can be changed (see “Selecting further settings – Changing the time until the door alarm is triggered”). However, the door alarm can also be turned off (see “Selecting further settings – Setting the volume/ Switching alarms and audible tones on/ off”).

The alarm will stop and ⚠ will go out in the display as soon as the door is closed.

The door alarm is only displayed on the start screen.

The door alarm is automatically supressed when you are in Settings mode. No symbol will be displayed and no alarm will sound.

If an alarm does not sound even though the door is open, the alarm has been switched off in Settings mode (see “Selecting further settings – Setting the volume/Switching alarms and audible tones on/off”).

Switching the door alarm off early

If the noise disturbs you, you can switch the alarm off if you wish.

- Touch ⚠.

The current temperature is shown in the display. The alarm will stop.

Settings overview

The following settings can be activated or changed. Default settings are shown in **bold** or as marked level in the segment bar.

Setting		Selection/factory default setting
	Use minute minder (QuickCool Timer)	**0:00**–9:59 h:min
	Switching the ice cube maker on and off	On (symbol orange) / **Off**
	Activate/deactivate the safety lock	On/**off**
	Switch appliance off	OK
	Switch Sabbath mode on/off	On (orange symbol)/**off**
	Change the time before the door alarm is triggered	Level 1–7 (level 1 = 30 sec) (**level 2 = 1 min**)
	Miele@home system settings (only visible if the WiFi stick has been fitted)	Further setting options are described in the fitting and installation instructions, which are enclosed with the stick.
	Switch keypad tone on/off	**On**/off
	Set volume/switch off alarms and audible tones	Off – level 7
	Set the display brightness	Level 1–7
°C	Change the temperature unit	°C/°F
	Demo mode (only visible when switched on)	**Off**

	Reset default settings	
	Access information about your refrigeration appliance	Display (important when reporting a fault to Miele Service)
	Clean ventilation grille reminder	On (orange symbol)/**off**
	Cleaning (only appears when the ice maker is switched on)	On (symbol orange) / **Off**

Selecting further settings

In Settings mode ‣≡, certain settings can be adjusted and functions selected, allowing you to adjust the refrigeration appliance to suit your requirements.

See the following pages for more information on these settings.

The door alarm and other warnings are automatically supressed when you are in Settings mode. No symbol will be displayed and no alarm will sound. Exception: If there is an appliance fault (F+numbers), Settings mode will be exited automatically. The fault code will be shown on the display and an alarm will sound (see “Problem solving guide – Display messages”).

Accessing Settings mode

Status display

- Touch ‣≡.

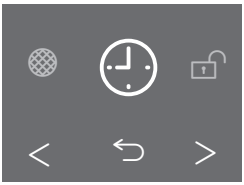

Settings mode

- Scroll left or right using the < or > arrow buttons.

The symbol for the selectable setting appears in the middle of the display.

The symbols for the next available settings appear in the background to the right and left, but are not selectable.

- Touch the symbol for the setting you want (see “Settings overview”).

Depending on the setting selected, there are two options:

1. You go into a sub-menu with further options or where values can be entered.
2. You select the setting directly. The symbol turns orange and this confirms your selection. If the symbol is white, the function has not been activated.

Entering values

All values entered must be confirmed with OK. If the value is not confirmed the display will revert to the start screen after approx. 15 seconds and the set or altered values will not be adopted.

Exiting a menu (“Back” ⮌)

You can return to the previous screen by touching ⮌.

Entries made before this which have not been confirmed with OK will not be saved.

Explanation of the different Settings

Using the minute minder ◷ (Quick-Cool timer)

The minute minder can be used to time other activities in the kitchen, e.g. chilling pastry. The audible tone will sound at the set time.

A maximum minute minder duration of 9 h 59 min can be set.

– Setting the minute minder

- Touch ◷.
- Use + or — to set the hours.
- Confirm with OK.

The hours are now set. You can now set the minutes.

- Use + or — to set the minutes.
- Confirm with OK.

The minutes are now set. The set minute minder time starts counting down. If the appliance door is opened again, the minute minder duration will appear counting down in the display. After approx. 3 s, the display changes to the start screen.

If the minute minder duration is displayed or altered, the minute minder duration countdown will be halted.

In the event of an interruption to the power supply or when power is restored, any previously set minute minder duration will be deleted.

– When the minute minder duration has elapsed

An audible signal will sound and ◷ will flash.

■ Touch the display.

The start screen appears.

– Altering a minute minder entry

■ Open the appliance door.

◷ and the minute minder duration countdown appear for approx. 3 s in the display.

■ During this time, touch the minute minder duration countdown in the display.

■ Touch ✎ to alter a minute minder duration. Proceed exactly as for setting the minute minder duration (see “Setting the minute minder”).

– Cancelling a minute minder duration

■ Open the appliance door.

◷ and the minute minder duration countdown appear for approx. 3 s in the display.

■ During this time, touch the minute minder duration countdown in the display.

■ Touch 🗑 to delete a minute minder duration.

The start screen appears.

You can also alter or cancel a set minute minder duration in Settings mode.

Switching the ice cube maker on and off

⚠ Risk to health due to contaminated water.

Bacteria can develop in water which has been sitting in the water supply lines for too long. This poses a risk to your health.

Throw away the first 3 batches of ice cubes made after the ice cube maker is started up, as the water will have been used for the initial rinsing of the water supply line.

This applies to the initial commissioning as well as when using the ice cube maker again after it has been switched off for an extended period of time (more than 5 days).

Only make normal domestic quantities of ice cubes with the ice cube maker.

Please note:

- When using the appliance for the first time, it can take up to 24 hours for the first ice cubes to drop out of the ice cube maker and collect in the drawer.
- After the ice cube maker has been turned off and on again, this process lasts max. 6 hours.
- Make sure that the ice cube drawer is empty before switching on the ice cube maker.
- Ice cubes can only be made when the ice cube drawer is completely closed.

If ⌂ lights up in the display, the ice cube maker is not being supplied with sufficient water.
Make sure the stopcock is open.

The ice cube maker can be turned off independently of the refrigeration appliance if you do not want to make any ice cubes.

Tip: If the ice cube maker is switched off, the ice cube drawer can be used as an extra drawer for freezing fresh food and storing frozen food.

After a power cut, the ice cube maker will, if it was previously switched on, be deactivated after power is restored.

– Additional functions

After switching the ice cube maker on, the function “Ice cube tray: set to cleaning position ⓪” will appear in the display in Settings mode ‣≡.

For further information on the function go to “Cleaning and care”, “Cleaning the ice cube tray”.

Switching the ice cube maker off for a long time.

⚠ Risk of damage!
If the water inlet is blocked while the ice cube maker is still in use, the water inlet pipe can freeze up.
Turn the ice cube maker off if the water supply is turned off (e.g. while on holiday).

- Close the stopcock for the water inlet.

If ⌂ begins to flash in the display, this means that there is still water remaining in the ice cube maker.

- Leave the ice cube maker on for another day so that the remaining ice cubes can be produced.
- Turn the ice cube maker off as soon as the remaining ice cubes have been produced.
- Take the remaining ice cubes out of the ice cube drawer and dispose of them.

Activating 🔒 or deactivating 🔓 the safety lock

The safety lock can be activated to prevent:

- the appliance being switched off by mistake,
- the temperature being changed by mistake,
- the Super freeze function being selected by mistake,
- settings being adjusted by mistake (it is only possible to deactivate the lock).

This prevents the appliance being switched off or settings adjusted without your knowledge, by children, for example.

The safety lock will remain activated following an interruption to the power supply, if previously switched on.

– Deactivating the safety lock 🔒 temporarily

■ Touch the display.

🔒 appears.

■ Touch 🔒 for approx. 6 seconds.

You can now select other settings. If the appliance door is closed again, the safety lock is activated again.

– Deactivating the safety lock 🔒

■ Touch the display.

🔒 appears.

■ Touch 🔒 for approx. 6 seconds.

The start screen will appear.

■ Touch ▸≡.

■ Select 🔒.

🔒 lights up orange.

■ Touch 🔒.

🔓 appears in the display. The safety lock is deactivated.

Switching the refrigeration appliance off ⏻

The whole refrigeration appliance can be switched off with this function.

The temperature display goes out and ⏻ lights up.

The interior lighting goes out and cooling is turned off.

⏻ will go out after approx. 10 minutes and the display will turn dark (Energy-saving mode).

Switching Sabbath mode on/off

The refrigeration appliance has a Sabbath mode to support the observance of religious customs.

The following are switched off:

- The interior lighting when the appliance door is opened
- All acoustic and visual signals
- The temperature display
- The SuperFreeze function (if previously selected)
- The minute minder (if switched on previously)

In addition, you cannot make any settings in Settings mode.

The Sabbath mode function will switch itself off automatically after approx. 120 hours.

Ensure that the appliance door is properly closed, as visual and audible alarms are switched off.

⚠ Health risk caused by decomposing food.
As any mains outage during Sabbath mode is not indicated, the frozen goods may thaw or defrost. This will reduce the storage life of the food.
Check whether the frozen goods have started to defrost. If they have, check that the food is safe to use and if it is, then use it as soon as possible or cook it before freezing it again.

– Switching Sabbath mode on

■ Touch.

lights up orange.

Then lights up white in the display.

Sabbath mode display

will go out after approx. 3 seconds and the display will go dark.

– Switching Sabbath mode off prematurely

■ Touch the display.

appears.

■ Touch.

lights up orange.

■ Touch.

lights up white. The function is switched off.

Setting the time before the door alarm is triggered

The refrigeration appliance has a door alarm. If a door is open for a longer period of time an alarm will sound (if this has not been switched off: see “Setting the volume/Switching alarms and audible tones on/off”) and will light up in the display (see “Temperature and door alarm – Door alarm”).

You can set the time before the door alarm sounds with the segment bar: The time can be set in 30-second increments, starting with 30 seconds (level 1 = 1 filled-in segment) up to a maximum of 3 minutes 30 seconds (level 7 = 7 filled-in segments).

Switching the sensor tone on / off

Every time a selectable field is touched a sensor tone sounds. You can switch this on or off .

Setting the volume/Switching alarms and audible tones on/off

You can set the volume of the alarms and audible tones in the segment bar: If all segments are filled in, the maximum volume is set.
If no segments are filled in, the alarm and audible tones are switched off. appears.

You will hear the volume change as it is adjusted.

Alarms and audible tones for temperature alarms, error messages, interruptions to the power supply or a set minute minder cannot be switched off.

Setting the display brightness ☼

You can set the display brightness in the segment bar:
If all segments are filled in, the maximum brightness is selected.

You will see the brightness change as it is being adjusted.

Setting the temperature unit °C/°F

You can choose between degrees Celsius °C and degrees Fahrenheit °F for the temperature display.

Switching Demo mode off

Demo mode allows the refrigeration appliance to be presented in the showroom without the cooling system being switched on. Do not activate this setting for domestic use.

If Demo mode has been switched on as a default setting, will show on the display. You can switch the function off here.

If Demo mode has been switched off it cannot be switched on again via Settings mode ≡.

Resetting to the factory default settings

All appliance settings are reset to the factory default and the appliance is switched off.

Accessing information i

Appliance data (model number and serial number) is shown in the display.

Tip: This data is important when reporting an appliance fault to Miele Service.

Confirm with OK to leave the information screen.

– Displaying licence agreements

Licences used can be displayed via ©.

Clean ventilation grille ⊛ reminder

The appliance has a ventilation grille in the plinth.

If the Clean ventilation grille reminder is activated, you will be reminded to dust the ventilation grille after approx. 12 months (see “Cleaning and care - Cleaning the ventilation grille”). ⊛ will then appear in the display and an audible tone will sound (if switched on).

Tip: The ventilation grille should be cleaned on a regular basis with a brush or vacuum cleaner (e.g. use the dusting brush for Miele vacuum cleaners).

A build-up of dust will increase the energy consumption of the appliance.

Touch the symbol to confirm the message. This resets the counter and the display changes back to the start screen.

Maximum freezing capacity

To ensure that fresh food placed in the freezer freezes through to the core as quickly as possible, the maximum freezing capacity must not be exceeded. The maximum freezing capacity for freezing within a 24-hour period is given on the data plate: “Freezing capacity ... kg/24 hrs”.

Freezing fresh food

Fresh food should be frozen as quickly as possible. This way the nutritional value of the food, its vitamin content, appearance and taste are not impaired.

Food which takes a long time to freeze will lose more water from its cells, which then shrink. During the defrosting process, only some of this water is reabsorbed by the cells. What this means in practice is that the food loses more moisture. You can see this in the large amount of water that collects around the food when it defrosts.

If food is frozen quickly, the cells have less time to lose moisture, so they shrink less. As there is not so much moisture loss, it is easier for the food to reabsorb it during the defrosting process, and very little water collects around the defrosted food.

Storing frozen food

Never re-freeze partially or fully defrosted food. Defrosted food may only be re-frozen after it has been cooked.

When buying frozen food to store in your freezer, check:

- That the packaging is not damaged
- The use-by date
- The temperature at which the frozen food is being stored in the shop.

  The length of time food can be kept is reduced if it has been stored at a temperature warmer than -18 °C.

■ Buy frozen food once you have finished the rest of your shopping and wrap it in newspaper or use a cool bag or cool box to transport it.

■ Put it into the freezer as soon as possible.

Home freezing

Only freeze fresh food which is in a good condition.

Hints on home freezing

- The following types of food **are suitable** for freezing:
  Fresh meat, poultry, game, fish, vegetables, herbs, fresh fruit, dairy products, cakes, leftovers, egg yolks, egg whites and a range of pre-cooked meals.
- The following types of food **are not suitable** for freezing:
  Grapes, lettuce, radishes, soured cream, mayonnaise, eggs in their shells, onions, whole raw apples and pears.
- To retain colour, taste, aroma and vitamin C, vegetables should be blanched before they are frozen. To do so place them portion by portion into boiling water for 2–3 minutes. Remove, and plunge into ice-cold water to cool quickly. Drain and pack ready for freezing.
- Lean meat freezes better than fatty meat, and can be stored for considerably longer.
- Separate chops, steaks, cutlets etc. with a sheet of plastic freezer film. This prevents them from freezing together in a block.
- Do not salt or season raw food or blanched vegetables before freezing. Cooked food should only be lightly salted and seasoned. Some herbs intensify the taste of food when frozen.
- Placing hot foods or drinks in the freezer causes food that is already frozen to partially thaw and increases energy consumption. Allow hot foods and drinks to cool down before placing them in the freezer.

Packaging food for freezing

■ Freeze food in portions.

– Suitable packing material

- Plastic freezer bags
- Tubular polythene freezer bags
- Aluminum foil
- Freezer containers

– Unsuitable packing material

- Wrapping paper
- Greaseproof paper
- Cellophane
- Bin bags
- Plastic carrier bags

■ Expel as much air as possible from the packaging.

■ Close the packaging tightly with

- Rubber bands
- Plastic clips
- String
- Freezer tape

Tip: Freezer bags may also be sealed using home heat sealing kits.

■ Make a note of the contents and the date of freezing on the packaging.

Before placing food in the appliance

- When freezing more than 1 kg of fresh food, switch on the Super freeze function some time before placing the food in the freezer (see “Super freeze”).

This helps create a cold reserve in food which is already stored in the freezer.

Placing food in the freezer section

⚠ If the food is too heavy, this can cause damage.

Loading food which is too heavy can cause damage to the freezer drawers/glass shelves.

Do not exceed the relevant maximum load:
– Top freezer drawer = 15 kg
– Bottom freezer drawer = 10 kg
– All other freezer drawers = 25 kg
– Glass plates = 35 kg

Unfrozen food should not touch frozen food as this will cause frozen food to begin to thaw.

- Make sure that the packaging and containers are dry to prevent them sticking together when frozen.

– Freezing small amounts of food

Place the food in the lower freezer drawers.

- Place the food flat in the bottom of the freezer drawers so that it freezes through to the core as quickly as possible.

– Freezing the maximum amount of food (see data plate)

If the ventilation slots are blocked the cooling performance will decrease and energy consumption will increase.

When placing food in the freezer, make sure that the ventilation slots are not blocked.

- Remove the upper freezer drawers.
- Place the food flat on the upper glass shelves so that it freezes through to the core as quickly as possible.

Once frozen:

- Place the frozen food in the freezer drawer and push it back in.

Storage time for frozen food

The storage life of food is very variable, even at a constant temperature of -18 °C. Decomposition processes also take place in frozen food, albeit at a very reduced speed. For example, fat can become rancid from contact with oxygen in the air. This is why lean meat can be stored approx. twice as long as fatty meat.

The storage times quoted are guide values for the storage life of different food groups in the freezer zone.

Food group	Storage time (Months)
Ice cream	2 to 6
Bread, baked goods	2 to 6
Cheese	2 to 4
Fish, oily	1 to 2
Fish, lean	1 to 5
Sausage, ham	1 to 3
Game, pork	1 to 12
Poultry, beef	2 to 10
Vegetables, fruit	6 to 18
Herbs	6 to 10

For standard freezing results, follow the advice on packaging.

By keeping the freezer zone at a constant temperature of -18 °C and taking appropriate hygiene measures you can maximise the storage life of your food and avoid food waste.

Defrosting frozen goods

Never re-freeze partially or fully defrosted food. Defrosted food may only be re-frozen after it has been cooked.

Frozen goods can be defrosted in different ways:

- In a microwave oven
- In an oven using “Fan heat” or the “Defrost” setting
- At room temperature
- In the refrigerator zone (the cold given off by the frozen food helps to keep the other food cold)
- In a steam oven

Flat pieces of partially thawed meat or fish can be placed directly into a hot frying pan.

Meat and poultry (e.g. mince, chicken, fish fillets) should not come into contact with other foods while defrosting. Catch the liquid from defrosting and dispose of it carefully.

Fruit should be defrosted at room temperature in its packaging, or in a covered bowl.

Most vegetables can be cooked while still frozen. Just put straight into boiling water or hot fat. The cooking time is slightly less than that of fresh vegetables due to changes in the cell structure.

Cooling drinks quickly

When cooling drinks quickly in the freezer, make sure bottles are not left in for **more than one hour**. Otherwise they could burst.

Tip: To avoid forgetting about bottles placed in the freezer you can set the minute minder (QuickCool timer) in Settings mode.

Making ice cubes

Switching the ice cube maker on and off

For instructions on how to switch the ice cube make on and off see “Selecting further settings” - “Switching the ice cube maker on and off”.

Making a large amount of ice cubes

The amount of ice cubes produced depends on the temperature in the freezer. The lower the temperature, the more ice cubes are produced within a given time. At a temperature of -18 °C, approx. 1 kg of ice cubes will be produced within 24 hours.

Tip: If you require a large amount of ice cubes, replace the full ice cube drawer with the drawer beside it on the right.

The ice maker will begin to produce ice cubes again as soon as this drawer has been placed in position and closed properly.

Switching the ice cube maker off for a long time.

⚠ Risk of damage!
If the water inlet is blocked while the ice cube maker is still in use, the water inlet pipe can freeze up.
Turn the ice cube maker off if the water supply is turned off (e.g. while on holiday).

- Close the stopcock for the water inlet.

If begins to flash in the display, this means that there is still water remaining in the ice cube maker.

- Leave the ice cube maker on for another day so that the remaining ice cubes can be produced.
- Turn the ice cube maker off as soon as the remaining ice cubes have been produced.
- Take the remaining ice cubes out of the ice cube drawer and dispose of them.

Using accessories

Freezer tray

The lowest freezer drawer in your appliance can be used as a freezer tray.

The freezer tray can be used to effectively freeze small items such as berries, herbs, vegetables etc.

The food keeps it shape and generally does not freeze together in a lump.

- Space the food out loosely on the tray.

Leave to freeze for 10 to 12 hours. Then fill in freezer bags or containers and place in the freezer drawers.

Using the cool pack

The cool pack prevents the temperature in the freezer zone from rising too quickly in the event of a power cut. This can help prolong the storage life.

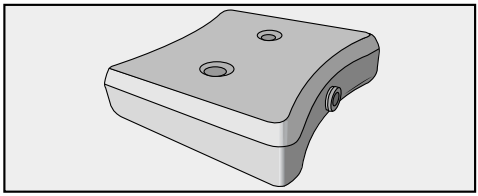

- Place the cool pack in the top drawer of the freezer zone.

The cool pack will be at its most effective after it has been in the freezer for approx. 24 hours.

– In the event of a power cut

- Place the frozen cool pack directly on top of the frozen food in the front of the top drawer.

Tip: When placing fresh food in the freezer, use the cool pack to separate the fresh food from the food which is already frozen so that the frozen food does not begin to thaw.

Adjusting the interior fittings

Removing freezer drawers on telescopic runners

Some of the freezer drawers are on telescopic runners and can be removed for filling, emptying or cleaning purposes:

You can also expand the space available in the freezer section. If you wish to freeze large frozen goods such as a turkey or game, the glass shelves between the drawers can be removed.

- Pull the drawers out as far as they will go.

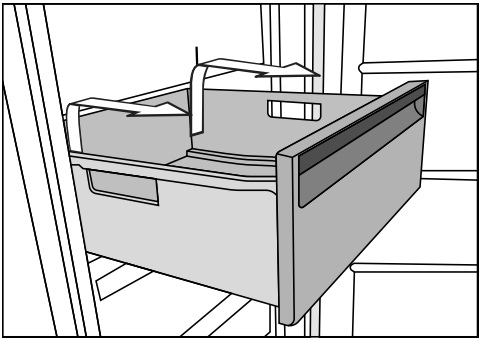

- Holding the sides of the drawer at the back, lift it up and then forwards and out.

Push the runners back in again to avoid damaging them.

⚠ Risk of damage as a result of incorrect cleaning.
The telescopic runners contain a special lubricant which can be washed out during cleaning, damaging the runners.
Wipe the telescopic runners with a damp cloth to clean them.

- To replace the drawer, push the runners back in completely and then place the drawer on them.
- Push the drawer into the refrigeration appliance until it clicks into position.

Removing the shelves.

The shelves can be removed.

- Lift the shelf slightly at the front and then pull it forwards and out.

Automatic defrosting

The appliance is equipped with a “NoFrost” system. The freezer defrosts automatically.

The moisture generated in the appliance collects on the condenser and is automatically defrosted and dissipated from time to time.

This automatic defrosting system enables the freezer to remain permanently ice-free. Food stored in the freezer will not defrost with this system.

Do not let water get into the electronic module or the lighting.

⚠ Risk of damage due to moisture ingress.
The steam from a steam cleaner can damage plastic and and electrical components.
Do not use a steam cleaner to clean the refrigeration appliance.

The data plate located inside the interior cabinet of the refrigeration appliance must not be removed. It contains information which is required in the event of a service call.

Cleaning agents

Cleaning and conditioning agents used inside the appliance must be food safe.

To avoid damaging all the surfaces of your appliance, **do not use:**

- cleaning agents containing soda, ammonia, acids or chlorides
- cleaning agents containing descaling agents
- abrasive cleaning agents, e.g. powder cleaners and cream cleaners
- solvent-based cleaning agents
- stainless steel cleaning agents
- dishwasher cleaner
- oven sprays
- glass cleaning agents
- hard, abrasive sponges and brushes, e.g. pot scourers
- melamine eraser blocks
- sharp metal scrapers

We recommend using a clean sponge, lukewarm water with a little washing-up liquid to clean surfaces of the appliance.

The following pages contain important information on cleaning.

Cleaning the ice cube tray

⚠ Clean the ice cube tray
– before switching off the ice cube maker for a long time.
– regularly, to remove ice and water residues.

The ice cube tray **cannot be removed** and must be cleaned in situ. For this reason the ice cube tray must be set to the cleaning position.

Selecting the cleaning position ⓪

The ice cube maker has to be switched on before the “Select cleaning position ⓪” function can be selected.

The ice cube drawer must also be in position.

- Empty the ice cube drawer and place it in the appliance.
- Select the ⓪ symbol in Settings mode ▸≡.

The selected setting is applied. You will hear the ice cube tray turn so that it is at an angle.

- Wait until the ice cube tray has completed this rotation before continuing.

The ✓ symbol will appear in the display.

- Remove the ice cube drawer.
- Clean the ice cube tray and the ice cube drawer with lukewarm water and a little washing up liquid. Wipe thoroughly with clean water and dry with a cloth.
- Insert the ice cube drawer back into the appliance.
- After cleaning, confirm ✓ with OK.

You will hear the ice cube tray return to its original position.

Preparing the refrigeration appliance for cleaning

■ Switch the refrigeration appliance off.

⏻ appears in the display and cooling is switched off.

■ Take any food out of the refrigeration appliance and store it in a cool place.

■ Take out the freezer drawers and glass plates.

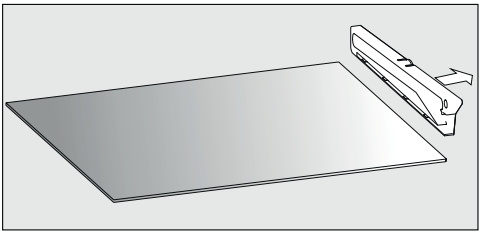

■ Pull the trim off the right and left hand sides of the top glass plate.

Removing the telescopic runners

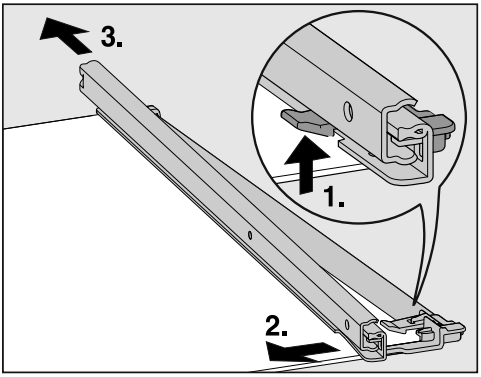

■ To remove the telescopic runners:

1. Push the catch upwards.
2. Push the telescopic runner to the side.
3. Then pull the telescopic runner off to the rear.

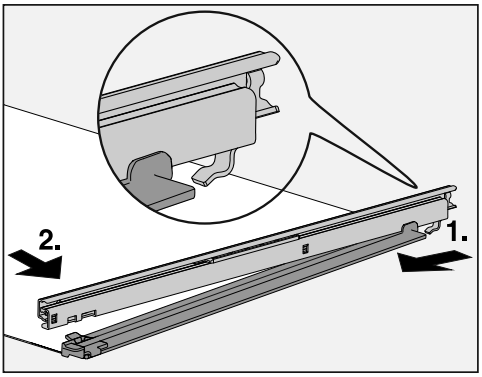

■ After cleaning, reattach the telescopic runners to the shelf.

1. Do so by hooking the telescopic runner on at the rear.
2. Then clip the catches into position at the front.

■ Take out all other removable parts for cleaning.

Cleaning the interior and accessories

The refrigeration appliance should be cleaned regularly (roughly twice a year).

Remove soiling immediately to prevent it from drying on.

The best time to do this is when:

- There is very little or no frozen food left in the freezer zone.
- The humidity level in the room is low and the ambient temperature in the room is also low (cooler part of the year).

■ Clean the **interior** with a clean sponge, lukewarm water and a little washing-up liquid.

■ After cleaning, wipe with clean water and dry with a soft cloth.

■ Leave the door open to air the appliance for a short while and to prevent odours building up.

The following parts **cannot be cleaned in a dishwasher**:

- all drawers and the compartment lid (depending on model)
- the glass plates with trim
- the cool pack

■ These accessories should all be hand washed.

Cleaning the front of the appliance and the side panels

If soiling is left on for any length of time, it may become impossible to remove. Surfaces may suffer discolouration or damage.
Therefore, it is best to remove soiling from the appliance front and side panels immediately.

All surfaces are susceptible to scratching. Contact with unsuitable cleaning agents can alter or discolour the surfaces.
See the information on “Cleaning agents” at the beginning of this section.

■ Clean the surfaces with a clean sponge and a solution of warm water and washing-up liquid. A clean, damp microfibre cloth without cleaning agent can also be used.

■ After cleaning, wipe with clean water and dry with a soft cloth.

Appliance front

⚠ Risk of damage as a result of incorrect cleaning.
The front finish (CleanSteel) will be damaged.
Do not use a stainless steel cleaning agent on this surface.

The appliance front has a high quality, special finish (CleanSteel). It is resistant to soiling and is very easy to clean.

Cleaning the ventilation grille

A build-up of dust will increase the energy consumption of the appliance.

- The ventilation grille should be cleaned on a regular basis with a brush or vacuum cleaner (e.g. use the dusting brush for Miele vacuum cleaners).

Tip: If you want to be reminded automatically every 12 months, switch the "Clean ventilation grille" reminder on (see "Selecting further settings – Clean ventilation grille ⊗ reminder").

Cleaning the door seal

If the door seal is damaged or has slipped out of its groove, the appliance door may not close properly and cooling performance will be reduced. As a result, condensate will build up in the interior cabinet and this can cause a build-up of ice.
Do not damage the door seal and ensure it does not slip out of its groove.

⚠ Risk of damage as a result of incorrect cleaning.
If you treat the door seal with oils or grease, it can become porous.
Do not use any oils or grease on the door seal.

- The door seal should be cleaned regularly with clean water and then wiped dry with a cloth.

Starting up the appliance after cleaning

- Slide all shelves back into the appliance.
- Reconnect to the mains and switch the appliance back on.
- Switch on the Super freeze function for a while so that the freezer section can cool down quickly.
- Once the temperature in the freezer has reached the required temperature, place the food back in the freezer drawers and put them back in the freezer. Then close the appliance door.
- Switch off the Super freeze function as soon as the temperature in the freezer is a constant -18 °C or colder.

Problem solving guide

Many malfunctions and faults that can occur in daily operation can be easily remedied. Time and money will be saved because a service call will not be needed.

The following guide may help you to find the reason for a malfunction or a fault, and to correct it.

To prevent unnecessary loss of temperature it is advisable not to open the door while waiting for the appliance to be serviced.

Problem	Cause and remedy
The appliance is not getting cold and the interior lighting does not come on when the door is opened.	The appliance has not been switched on. ■ Switch the appliance on.
	The mains plug is not inserted in the socket correctly or the plug connector is not inserted into the socket at the back of the appliance correctly. ■ Insert the mains plug into the mains socket and the plug connector into the appliance socket correctly and switch on.
	Check whether the mains fuse has tripped. There could be a fault with the appliance, the household electrical wiring or another electrical appliance. ■ Contact a qualified electrician or Miele.
The compressor runs continuously.	This is not a fault. To save energy, the compressor runs at a lower speed, but for longer, when less cooling is required.

Problem	Cause and remedy
The compressor is switching on more frequently and for longer periods of time. The temperature in the refrigeration appliance is too low.	The ventilation gaps have been covered or become too dusty. ■ Do not block the ventilation gaps. ■ Dust the ventilation gaps regularly.
	The appliance door has been opened too frequently, or a large amount of fresh food has been placed in the appliance for freezing. ■ Only open the door when necessary and for as short a time as possible. After a while, the temperature will return to normal by itself.
	The appliance door is not properly closed. A thick layer of ice may have formed in the freezer. ■ Close the appliance door. After a while, the temperature will return to normal by itself. If a thick layer of ice has formed, it will reduce efficiency and increase the energy consumption. ■ Defrost the refrigeration appliance and clean it.
	The ambient room temperature is too high. The higher the room temperature, the longer the compressor will run for. ■ See the information under “Installation – Location”.
	The temperature setting in the refrigeration appliance is too low. ■ Correct the temperature setting.
	The SuperFreeze function is still switched on. ■ You can switch off the SuperFreeze function earlier to save energy.

Problem	Cause and remedy
The compressor comes on less and less often and for shorter periods of time. The temperature in the refrigeration appliance rises.	Not a fault. The temperature setting is too high. ■ Correct the temperature setting. ■ Check the temperature again after 24 hours.
	The frozen goods begin to defrost. The room temperature is too low for this refrigeration appliance. If the room temperature is too low, the compressor will run less frequently. This may cause the freezer section to become too warm. ■ See the information under “Installation – Location”. ■ Increase the temperature of the room.
Ice or condensation has built up inside the refrigeration appliance. The appliance door may not close correctly.	The door seal has come out of its groove. ■ Check that the door seal is correctly positioned in the groove.
	The door seal is damaged. ■ Check whether the door seal is damaged.
The door seal is damaged or needs to be replaced.	No tools are required to change the door seal. ■ Change the door seal. A replacement is available from Miele or from specialist retailers.
Frost has accumulated on the front panel of the NoFrost module.	Not a fault. Condensation has settled on the panel and frozen. Possible reasons for this include: – The appliance door has been opened too often or has been left open. – A large amount of food being frozen at once. – The humidity in the room has increased. ■ Keep the appliance door closed as much as possible. The NoFrost system will automatically defrost the layer of ice over the next few days.

Display warnings

Message	Cause and remedy
lights up on the display, the appliance does not get cold even though the controls and the interior lighting are working.	**Demo mode** is switched on. ■ Switch Demo mode off (see “Selecting further settings – Switching Demo mode off”).
Nothing is visible on the display. The display is completely blank.	**Energy-saving mode** is switched on. If the appliance has not been operated for a while (approx. 10 minutes), the display is switched off. ■ Touch the display. The display shows the most recent indication.
	Sabbath mode is switched on. The interior lighting is switched off and the appliance is cooling down. ■ Touch the display. will then light up white in the display (see “Selecting further settings – Switching Sabbath mode on/off”).
is lit up in the display and the appliance cannot be used.	The **safety lock** has been activated. ■ Deactivate the safety lock temporarily or switch it off completely (see “Selecting further settings - Activating or deactivating the safety lock”).
lights up in the display and an audible tone also sounds.	The **Clean ventilation grille reminder** setting has been activated. This is the prompt to clean the ventilation grille. ■ Confirm the message by touching in the display and clean the ventilation grille (see “Cleaning and care - Cleaning the ventilation grille”).

Message	Cause and remedy
lights up yellow in the display and an alarm also sounds.	The **door alarm** has been activated (see “Temperature and door alarm”, section “Door alarm”). ■ Touch in the display. The alarm message is confirmed and the warning tone stops. The current temperature will appear in the display again. ■ Close the appliance door. The alarm will stop.

Message	Cause and remedy
🌡⚠ lights up red in the display and an alarm also sounds.	The **temperature alarm** has been activated (see “Temperature and door alarm”). The temperature in the refrigeration appliance has risen higher or fallen lower than the temperature set. Possible reasons for this include: – The appliance door has been opened too frequently. – A large quantity of fresh food has been placed in the freezer without switching on the Super-Freeze function. – A prolonged power cut (mains outage) has occurred. – The refrigeration appliance has a fault. ■ Touch 🌡⚠ in the display. The alarm message is confirmed: 🌡⚠ goes out and the alarm stops. The status display appears: the warmest temperature recorded in the freezer will flash for about 1 minute in the display. Then the temperature display will change to the current temperature in the freezer. You can exit from the flashing temperature display early: ■ Touch the temperature display. The warmest temperature displayed will disappear. The display will then revert to showing the current temperature in the freezer. ■ Rectify the cause of the alarm. ■ Depending on the temperature displayed, you should check whether food in the freezer has started to thaw or has defrosted. If it has, it should be used as soon as possible. Defrosted food may only be re-frozen after it has been cooked.

Message	Cause and remedy
-C⚠ lights up red in the display and an alarm also sounds.	Indication of an **interruption to the power supply**: the temperature in the appliance over the last few days or hours has risen too high because of a power cut or interruption to the power supply. ■ Touch -C⚠ in the display. The fault message is confirmed: -C⚠ goes out and the alarm will stop. The start screen appears in the display: the warmest temperature recorded in the freezer will flash for about 1 minute in the display. Then the temperature display will change to the current temperature in the freezer. You can exit from the flashing temperature display early: ■ Touch the temperature display. The warmest temperature displayed will disappear. The display will then revert to showing the current temperature in the freezer. The appliance will go back to the last temperature setting when the power is back on. ■ Depending on the temperature displayed, you should check whether food in the freezer has started to thaw or has defrosted. If it has, it should be used as soon as possible. Defrosted food may only be re-frozen after it has been cooked.

Message	Cause and remedy
⚠ lights up red in the display, a fault code F with numbers appears and an alarm also sounds.	There is a fault. An appliance fault always has priority over any settings which have just been selected. An appliance fault has priority over any current door and/or temperature alarms displayed. ■ To switch the alarm off touch 🔇 in the display. ■ Call Service. To report the fault you need the fault code and also the model number and serial number of your appliance. You can access these in the display. ■ To do this touch ℹ in the display. The appliance data required will be shown in the display. ■ Confirm with OK. In an emergency the appliance can be switched off directly by the fault display. ■ Touch ⏻.

Message	Cause and remedy
lights up yellow in the display and an alarm also sounds.	The ice cube drawer is not in the refrigeration appliance. A buzzer sounds after closing the appliance door. ■ Touch in the display. The alarm message is confirmed and the buzzer stops. The current temperature will appear in the display again. ■ Replace the drawer correctly in the refrigeration appliance or switch the ice cube maker off.
	The mains water connection has not been installed. ■ Make sure that the mains water connection has been installed correctly.
	The water supply is turned off. ■ Open the stopcock.
	There is a kink in the stainless steel hose. ■ Check the stainless steel hose; if it is faulty, it must only be replaced by an original Miele spare part.
	The water connection pressure is too low. ■ Check that the water connection pressure is between 150 kPa and 600 kPa (1.5 bar and 6 bar).
The symbol lights up in the display and an alarm sounds.	You have selected the “Cleaning position” function, and the appliance has detected that the ice cube drawer is full. The selected procedure is interrupted and an alarm has sounded. ■ Touch in the display. The alarm message is confirmed and the warning tone stops. The current temperature will appear in the display again. ■ Empty the drawer, and then replace it in the appliance.
lights up red in the display and an alarm also sounds.	There is a fault with the ice cube maker. ■ Tap on the display to switch the alarm off. ■ Call the Miele Customer Service Department. The ice cube maker can also be switched off in Settings mode .

Problems with the ice cube maker

Problem	Cause and remedy
The ice cube maker will not switch on.	The appliance is not connected to the power supply or is not switched on. ■ Reconnect to the mains and switch the appliance back on.
The ice cube maker is not producing any ice cubes.	The refrigeration appliance and the ice cube maker are not switched on. ■ Switch the refrigeration appliance and the ice cube maker on.
	The temperature in the freezer zone is too high. ■ Select a lower temperature.
	The appliance door has been opened too frequently, causing the compressor to turn on more often and the ice cube maker has iced up. ■ Only open the appliance door when necessary and for as short a time as possible. **Remember that it can take up to 24 hours to produce the first ice cubes.**

Problem	Cause and remedy
The ice cubes taste or smell odd.	The ice cube maker is in continuous use and should be cleaned regularly. ■ Rinse the ice cube maker and inlet pipe regularly. The 1st three batches of ice should be thrown away and not consumed.
	The ice cube maker is rarely used. Ice cubes that are stored for a long time can absorb the taste and smell of other items. ■ Empty the ice cube drawer if you are not going to use the ice cube maker for a long period of time. ■ Rinse the ice cube maker and inlet pipe regularly. The 1st three batches of ice should be thrown away and not consumed.
	Unwrapped food is stored in the freezer. Ice can absorb the taste and smell of unwrapped food. ■ Only store food which is packaged in the freezer section.
	The ice cube drawer is dirty. ■ Clean the ice cube drawer.

The interior lighting is not working.

Problem	Cause and remedy
The interior lighting is not working.	The refrigeration appliance has not been switched on. ■ Switch the refrigeration appliance on.
	Sabbath mode is switched on: the display is dark and the refrigeration appliance is cooling. ■ Touch the display. will then light up white in the display (see “Selecting further settings – Sabbath mode ”).
	To avoid overheating, the lighting switches itself off automatically after approx. 15 minutes if the appliance door is left open. If this is not the case, then there is a fault. ⚠ Risk of electric shock due to exposed, live electrical components. When removing the lighting cover, there is a risk of coming into contact with live electrical components. Do not remove the lighting cover. The LED lighting may only be repaired or replaced by the Miele Customer Service Department. ⚠ Danger of injury from LED lighting. This lighting corresponds to risk group RG 2. If the cover is defective, there is a danger of eye injury. If the lighting cover is defective, do not look from a close range directly into the lighting with optical instruments (e.g. magnifying glass or similar). ■ Call the Miele Customer Service Department.

Other problems

Problem	Cause and remedy
Food has frozen together.	The food packaging was not dry when placed in the freezer. ■ Use a blunt instrument, e.g. a spoon handle or plastic scraper, to prise it apart carefully.
There is no audible alarm even though the door has been open for a long time.	Not a fault! The alarm has been switched off in Settings mode (see “Selecting further settings – Setting the volume/Switching alarms and audible tones 🔊 on/off”).

Normal noises	What causes them
Brrrrr ...	A humming noise is made by the motor (compressor). This noise can get louder for brief periods when the motor switches on.
Blubb, blubb ...	A gurgling noise can be heard when coolant is circulating through the pipes.
Click ...	Clicking sounds are made when the thermostat switches the motor on and off.
Sssrrrrr ...	You can sometimes just hear the sound of the fan inside the appliance.
Crack ...	A cracking sound can be heard when materials expand inside the appliance.
Remember that the noise of the compressor and the coolant circulating in the system is unavoidable.	

Noises	Cause and remedy
Rattling, vibrating	The refrigeration appliance is uneven. Realign the appliance using a spirit level by raising or lowering the adjustable feet underneath the refrigeration appliance.
	The refrigeration appliance is touching another appliance or piece of furniture. Move it away.
	Drawers, baskets or shelves are jiggling or are stuck. Check all removable items and refit them correctly.
	Bottles or containers are touching. Separate them.

Contact in the event of a fault

In the event of any faults which you cannot remedy yourself, please contact your Miele dealer or the Miele Customer Service Department.

> You can book a Miele Customer Service Department call-out online at www.miele.com/service.
>
> Contact information for the Miele Customer Service Department can be found at the end of this document.

Please quote the model identifier and serial number of your appliance (Fabr./SN/Nr.) when contacting the Miele Customer Service Department. This information can be found on the data plate.

Please note that telephone calls may be monitored and recorded for training purposes and that a call-out charge will be applied to service visits where the problem could have been resolved as described in this booklet.

The data plate can be found inside the appliance.

Displaying appliance information

This can be found in Settings mode under Information ℹ (see “Selecting further settings”) or on the data plate inside the refrigeration appliance.

– Displaying licence agreements

Licences used can be displayed via ©.

EPREL database

From 1 March 2021, information on energy labelling and ecodesign requirements will be available in the European Product Database (EPREL). You can find the product database at the following link https://eprel.ec.europa.eu/. You will be asked to enter the model identifier.

The model identifier can be found on the data plate.

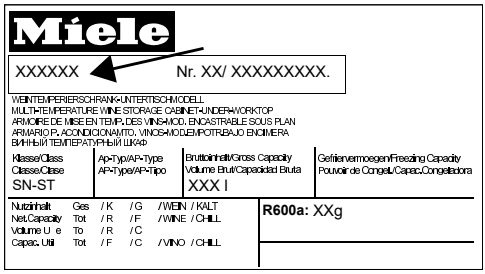

Warranty

The appliance warranty is valid for 2 years from date of purchase. In the UK, you must activate your cover by calling 0330 160 6640 or registering online at www.miele.co.uk.

For more information on country-specific warranty terms and conditions, please contact Miele Customer Service.

Installation

⚠ Fire risk and risk of damage from appliances which give off heat.

Appliances which give off heat can catch fire and set fire to the refrigeration appliance.

Do not place appliances which give off heat, such as mini-ovens, double burner hobs or toasters on the refrigeration appliance.

⚠ Fire risk and danger of damage from open flames.

Open flames can set fire to the refrigeration appliance.

Keep open flames (e.g. a candle) away from the refrigeration appliance.

⚠ Risk of damage due to corrosion.

In environments with high humidity, condensation can build up on external refrigeration appliance panels. This condensate can cause corrosion on external appliance panels.

Install the refrigeration appliance in a dry and/or air-conditioned room with sufficient ventilation.

After installation please make sure that the appliance door closes properly, the specified ventilation gaps are adhered to and the refrigeration appliance is installed in accordance with these installation instructions.

Climate range

The appliance is designed for use within a certain climate range (ambient temperature) and should not be used outside this range.
Operating in a room which is too cold will cause the compressor to switch off for too long, causing the temperature inside the appliance to rise with the risk of food deteriorating and going off.

The climate range is stated on the data plate inside the appliance.

Climate range	Ambient room temperature
SN	+10 to +32 °C
N	+16 to +32 °C
ST	+16 to +38 °C
T	+16 to +43 °C

A freezer from the SN climate range can operate without any difficulties in rooms with a cooler ambient temperature (down to +5 °C).

Ventilation

⚠ Risk of fire and damage due to insufficient ventilation.

If the refrigeration appliance is not ventilated sufficiently, the compressor will run more frequently and for longer periods. This will result in increased energy consumption and a higher operating temperature for the compressor. This may, in turn, cause damage to the compressor.

Please ensure that there is adequate ventilation around the refrigeration appliance.

It is essential to observe the required ventilation gaps.

The ventilation gaps must not be covered or blocked in any way.

They must also be regularly dusted.

Air at the back of the refrigeration appliance gets warm.

Fitting supplied wall spacers

The wall spacers supplied must be used in order to achieve declared energy consumption values and to prevent the build-up of condensation at high ambient temperatures. The appliance depth is increased by approx. 15 mm with the wall spacers fitted. If the wall spacers are not used, the functionality of the appliance is not affected. Energy consumption is only slightly increased with less distance between the appliance and the wall.

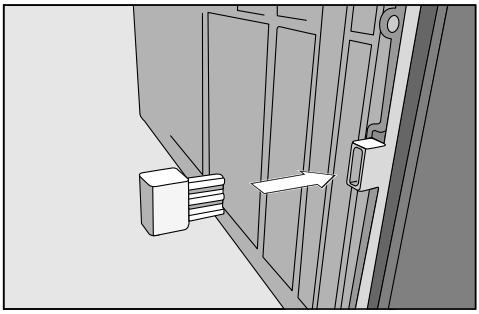

- Fit the wall spacers onto the back of the refrigeration appliance on the bottom left and right.

Limiting the opening angle of the appliance door

The door hinges are set ex works to enable the door to be opened up to 115°. If the appliance door hits an adjacent wall when opened, for example, the opening angle can be limited to approx. 90°:

The door opening angle limiter should be fitted before the refrigeration appliance is installed.

Fitting the door opening angle limiter

- Switch off at the wall and remove the plug from the socket, or disconnect the fuse.

– Removing the soft-close mechanism

- Open the appliance door.

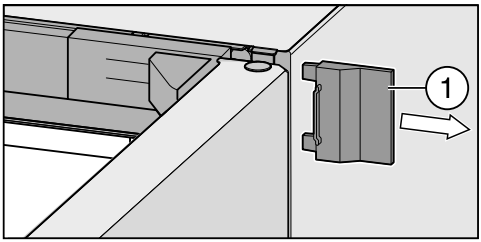

- Push off the right outer cover ①.

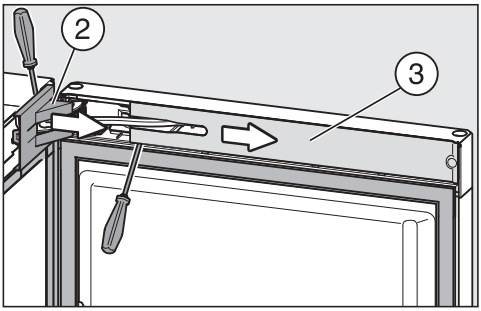

- Remove the cover ② from the door hinge and the cover ③ from the soft-close mechanism.

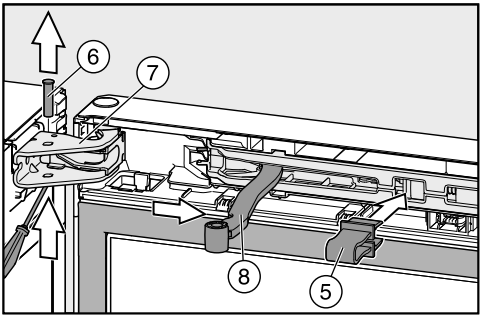

- Click the red safety device ⑤ (supplied with the refrigeration appliance) into place in the opening.

The safety device prevents the soft-close mechanism and the hinge plate from snapping shut.

Do not remove the red safety device until instructed to do so.

- Push the pin ⑥ out of the door hinge ⑦ and remove it.
- Move the hinged arm ⑧ of the soft-close mechanism away from the door hinge.

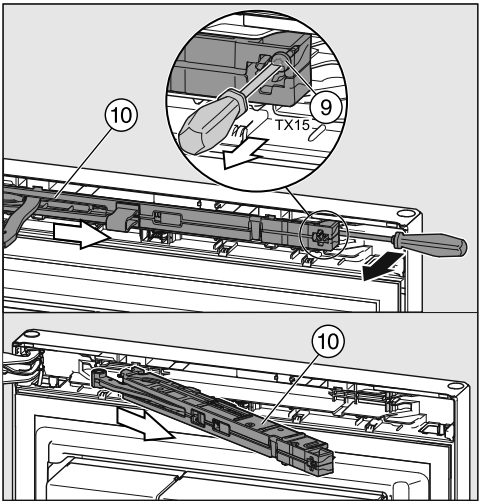

- Undo and remove the screw ⑨ on the soft-close mechanism ⑩ and insert a screwdriver behind the soft-close mechanism.
- Remove the soft-close mechanism ⑩.

– Fitting the door opening angle limiter

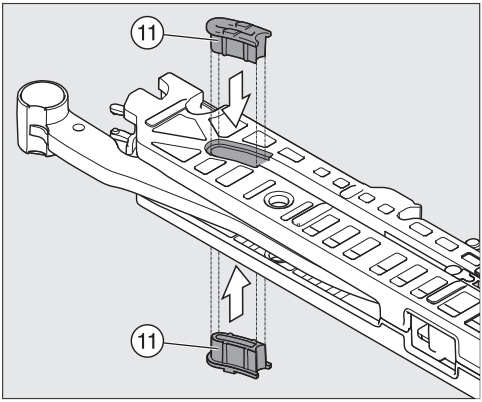

- Press a door opening angle limiter ⑪ in from above and below as shown.

– Fitting the soft-close mechanism

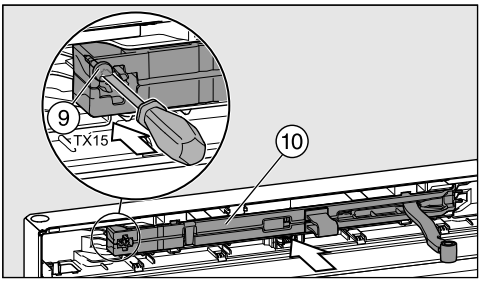

- Insert the soft-close mechanism ⑩ on the door hinge side (at an angle initially) so that it clicks into position.
- Then press the other end of the soft-close mechanism into the opening.
- Secure the soft-close mechanism with the screw ⑨.

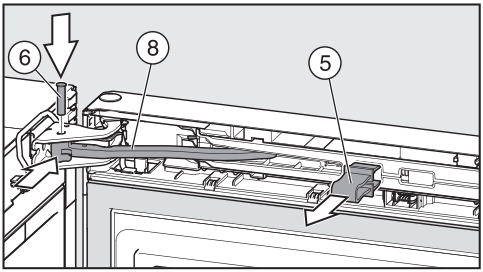

- Push the hinged arm ⑧ into the opening on the door hinge.
- Insert the pin ⑥ into the door hinge from above. Turn this with a screwdriver (by approx. ¼ turn) until both lugs on the pin click into position correctly in the grooves.
- Pull out the red safety device ⑤.

Tip: Keep the red safety device in case you want to change the door hinging again at a later date.

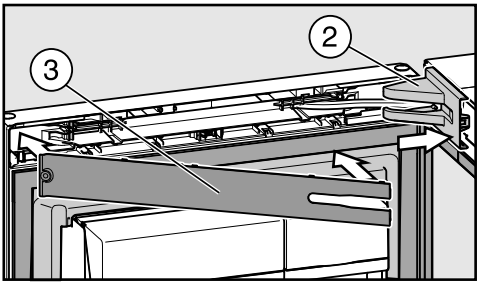

- Fit the cover ② on the door hinge.
- Fit the panel ③ so that it clicks into position.

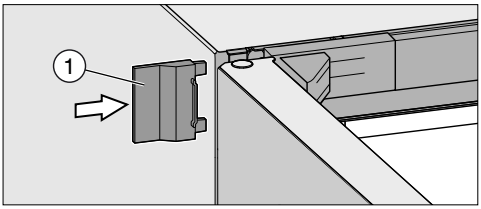

- Push on the outer cover ①.
- Close the appliance door.

If you intend to install your appliance “side-by-side” with another refrigeration appliance, please ensure that you observe the instructions in “Installing in a side-by-side combination”. The necessary installation parts are supplied with your appliance.

Installing the refrigeration appliance

⚠ Danger of injury and damage due to the refrigeration appliance tipping over.
There is an increased danger of injury and damage if the refrigeration appliance is installed by a single person.
Two people are required for installing the refrigeration appliance.

⚠ Risk of damaging the floor.
Moving the refrigeration appliance can cause damage to the floor.
Move the refrigeration appliance carefully on floors that are sensitive to scratching.

For easier installation, there are transport handles on the back at the top and transport wheels underneath the refrigeration appliance.

Tip: The refrigeration appliance must be empty when it is installed.

- Prepare the refrigeration appliance for installation as close as possible to its intended installation site.
- Connect the refrigeration appliance to the electricity supply as described in “Electrical connection”.
- Move the refrigeration appliance carefully to its intended installation site.
- Position the refrigeration appliance with the wall spacers (if used) or the back close to the wall.

Aligning the appliance

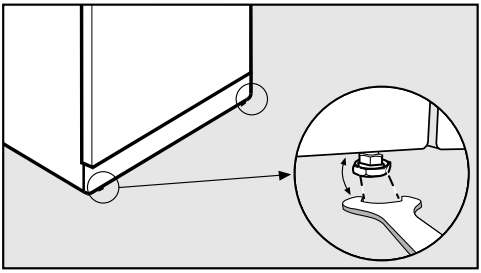

- To align the appliance, adjust the front feet using the spanner supplied

Levelling the appliance door

⚠ Risk of damage and injury caused by the appliance door falling out or the refrigeration appliance tipping over.

If the additional adjustable foot ① on the hinge plate at the bottom is not resting firmly on the floor, the appliance door can fall out or the refrigeration appliance can tip over.

Use the open spanner supplied with the appliance to unscrew the adjustable foot until it is resting on the floor.

Then unscrew the adjustable foot by a further quarter turn.

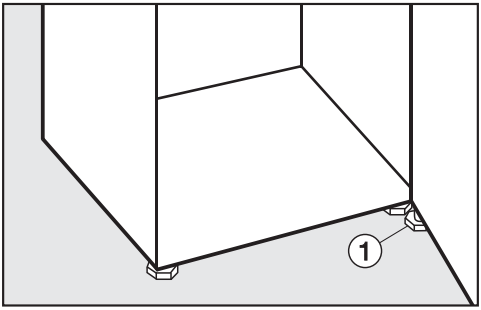

Installing the appliance in a run of kitchen units

⚠ Risk of fire and damage due to insufficient ventilation.

If the refrigeration appliance is not ventilated sufficiently, the compressor will run more frequently and for longer periods. This will result in increased energy consumption and a higher operating temperature for the compressor. This may, in turn, cause damage to the compressor.

Please ensure that there is adequate ventilation around the refrigeration appliance.

It is essential to observe the ventilation gaps given.

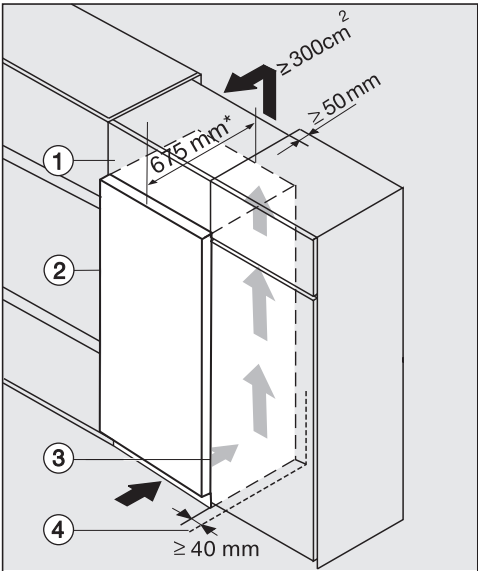

① Top box
② Refrigeration appliance
③ Kitchen furniture housing unit
④ Wall

* The appliance depth is increased by approx. 15 mm for appliances with wall spacers fitted.

The appliance can be built into any run of kitchen units and installed directly next to a kitchen furniture housing unit. The appliance front must protrude in front of furniture fronts by at least 65 mm. This enables the doors to be opened and shut without being obstructed. To match the height of the rest of the kitchen, the refrigeration appliance can be fitted with a suitable top box ①.

When installed next to a wall ④, a distance of at least 40 mm must be maintained on the hinge side between the wall ④ and the refrigeration appliance ②.

The larger the ventilation gap, the more economically the compressor will work.

- A ventilation gap with a depth of at least 50 mm must be provided at the back of the refrigeration appliance across the whole width of the top box to allow for venting.
- The ventilation gap under the ceiling must be at least 300 cm^2 to ensure that warm air can escape without obstruction.

Appliance dimensions

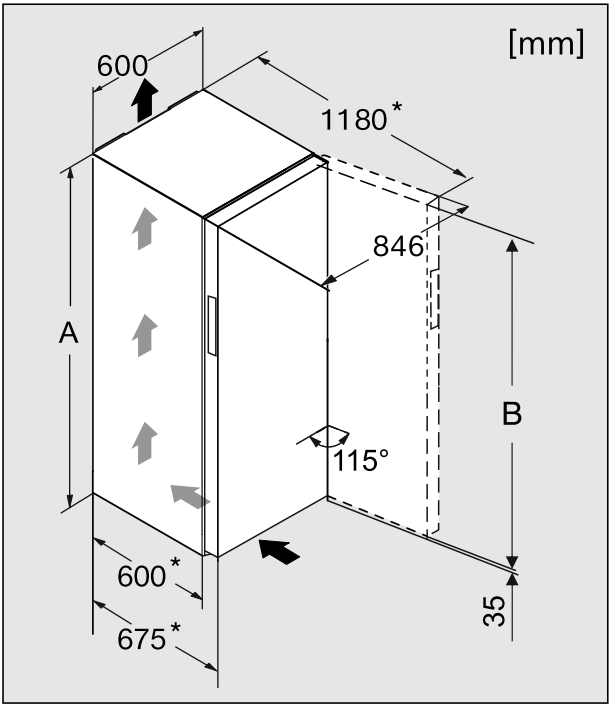

* Dimensions without wall spacers. Appliance depth is increased by 15 mm with the wall spacers supplied fitted.

	A [mm]	B [mm]
FNS 28463 E ed/cs	1850	1815

Installing in a side-by-side combination

To avoid a build-up of condensation and resultant damage, refrigeration appliances should not generally be installed directly next to other such appliances (side-by-side). Your appliance has side-wall heating and can therefore be installed side-by-side with another refrigeration appliance.

⚠ Risk of damage!

The assembled side-by-side combination is very heavy. Incorrect moving of the combination can cause the appliances to become dented or glass fronts to shatter.

Please observe the following notes when moving a side-by-side appliance combination.

It is essential that all side-by-side installation work is carried out by two people.

All fixings required for side-by-side installation are supplied with the appliance:

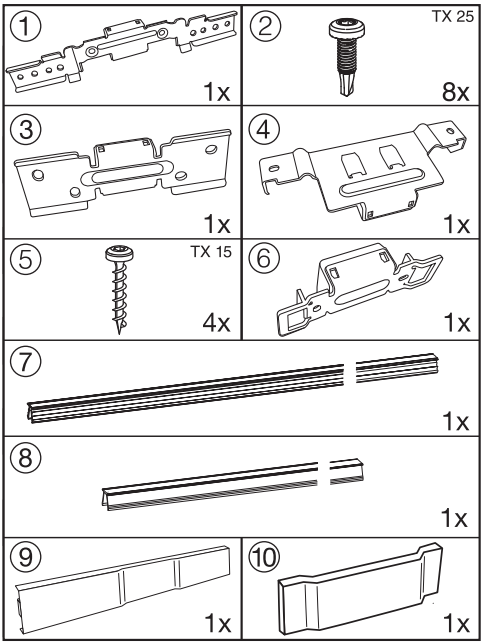

The following tools are supplied with the appliance:

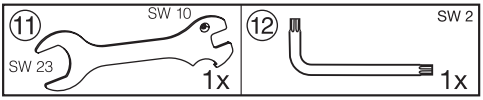

The following additional tools are also required:

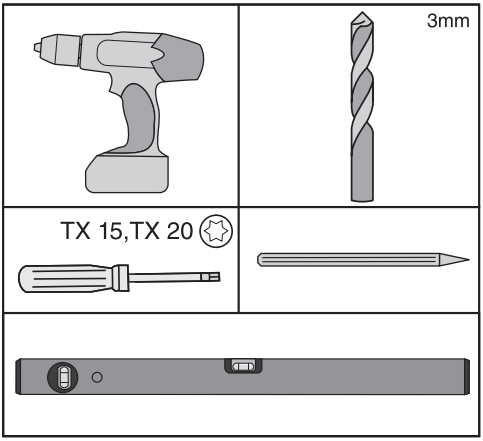

Installation

The backs of the appliances must be kept accessible to complete the installation.

- The freezer or refrigerator with freezer section must be installed to the left of the other refrigeration appliance (when viewed from the front). The side wall heating in the inner wall of the freezer or the refrigeration appliance with freezer section is designed to prevent the build-up of condensation between the two appliances.
- Place the two appliances as close as possible to their final position so that they can be aligned for any unevenness in the floor.
- Before starting, peel off any protective foil from the appliance casing.

Notes on moving side-by-side appliances:

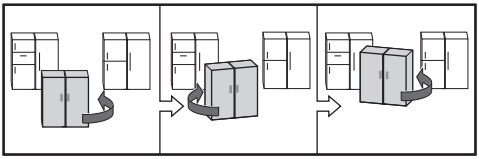

- Push the combination alternately from the left and right corners. Whilst doing so grasp the outside front corners. Do not, under any circumstances, use your knees to push against the sides or the appliance doors.

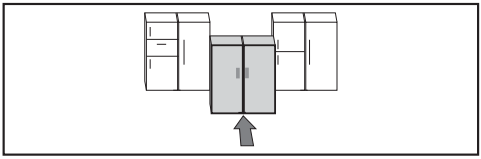

- Once the side-by-side combination is directly in front of the niche, push it carefully into position.

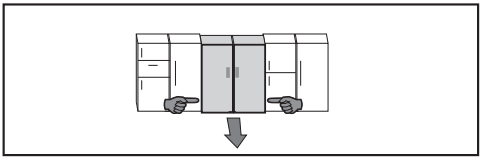

- If you need to pull the combination back out of the niche, hold it by the lower third and pull it straight out.

Installation instructions from the front of the appliances

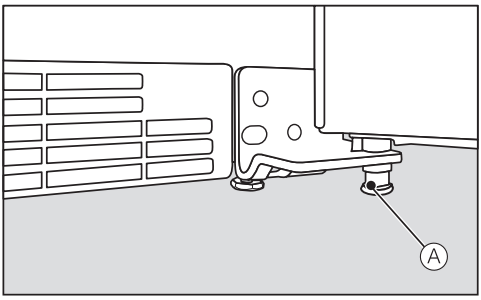

- Screw adjustable foot Ⓐ (for supporting the appliance door) right in with the spanner ⑪. The adjustable foot must not touch the floor.

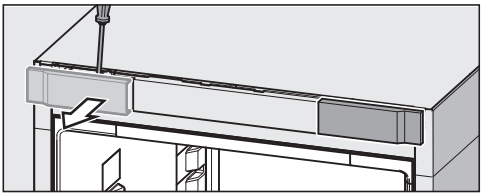

Top cover

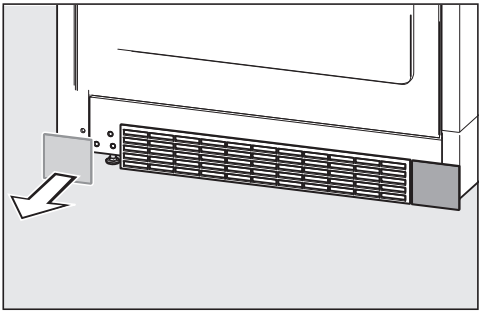

Bottom cover

- Take the covers off both appliances (from the side that they will be connected to each other on).

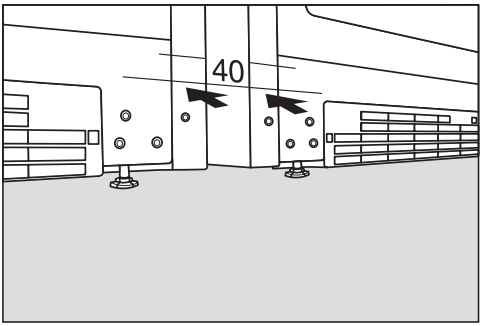

- Place the appliances next to each other so that the fronts are aligned, leaving a gap of slightly over 40 mm between them.

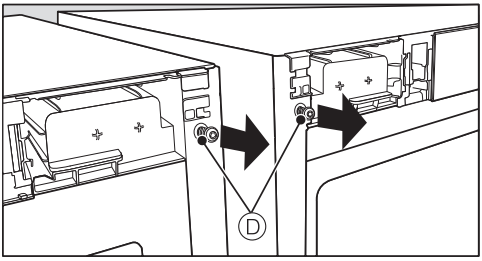

- Remove screws Ⓓ and keep them for the next step. They are needed for securing connecting bracket ① with.

The upper connecting bracket ① is fitted to align both appliances in height and depth with each other. If one appliance stands higher than the other, start with the higher one first.

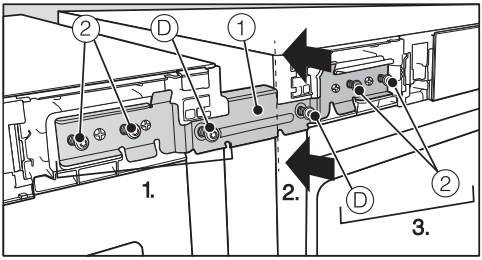

- Fit the upper connecting bracket ① to the pins on the appliance and secure it follows:

1. Secure connecting bracket ① in position using the screw Ⓓ that you have just unscrewed from the appliance, and screws ②.
2. Now press the second appliance up against the spacer piece on the connecting bracket.
3. Secure connecting bracket ① in position on the second appliance using the screw Ⓓ that you have just unscrewed from the appliance, and screws ②. When doing so push the appliances together slightly.

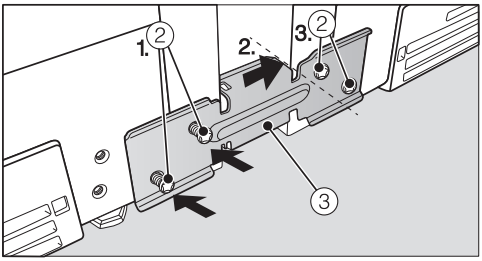

■ Place connecting bracket ③ with the horizontal long slots on the left-hand side and secure them as follows:

1. Secure it loosely in position with two screws ②.
2. Adjust the connecting bracket ③ until its centre piece abuts against the side of the second appliance.
3. Secure the connecting bracket ③ using screws ②.
4. Now tighten the loose screws and as you do so push the right-hand appliance up against the left-hand appliance.

Installation steps from the back of the appliances

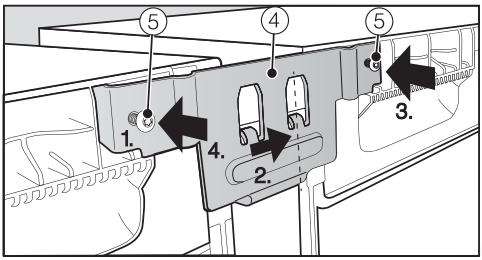

■ Place connecting bracket ④ with the horizontal long slot on the left-hand side and secure it as follows:

1. Secure it loosely with screw ⑤.
2. Adjust the connecting bracket ④ until its centre piece abuts against the side of the second appliance.
3. Secure the connecting bracket ④ using screw ⑤.
4. Now tighten the loose screw and as you do so push the right-hand appliance up against the left-hand appliance.

The holes for securing the connecting bracket ⑥ to have to be pre-drilled.

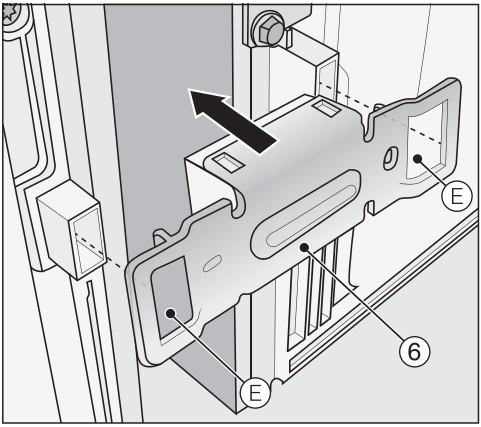

- Push the connecting bracket ⑥ with cut-outs Ⓔ over the holders for the wall spacers.
- Use a pen to mark the position of the drill holes.
- Then take the connecting bracket ⑥ off again.

Drill through the panel only. Drilling depth approx. 1 mm.

- Drill the screw holes with a 3 mm bit and then file any rough edges smooth.

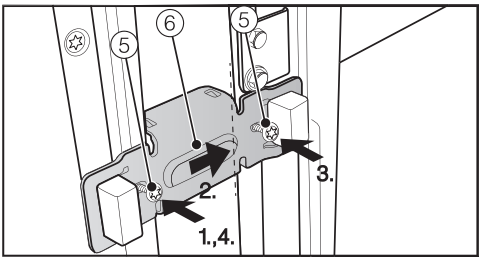

- Place connecting bracket ⑥ with the horizontal long slot on the left-hand side and secure it as follows:

1. Secure it loosely with screw ⑤.
2. Adjust the connecting bracket ⑥ until its centre piece abuts against the side of the second appliance.
3. Secure the connecting bracket ⑥ using screw ⑤.
4. Now tighten the loose screw and as you do so push the right-hand appliance up against the left-hand appliance.

Further installation instructions from the front of the appliances

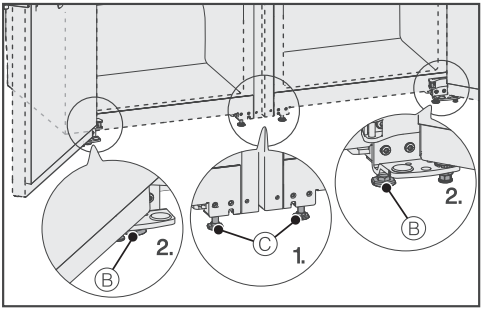

- Adjust the front feet with the spanner ⑪.

1. Screw in the central adjustable feet Ⓒ such that they do not touch the floor.
2. Now level the complete side-by-side combination with the outermost adjustable feet Ⓑ.

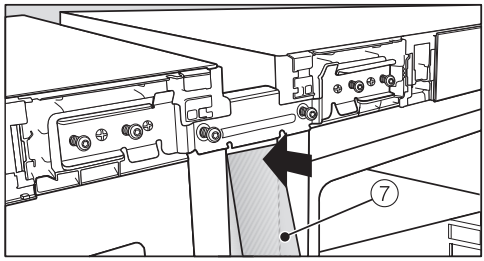

- Place trim ⑦ at the front of the appliance underneath the top connecting bracket and carefully work the trim ⑦ into the groove. Use a soft cloth to do this to avoid denting the trim.

Tip: Press both ridges along the entire length of the trim together. This simplifies the process of fitting the trim into the gap.

- Remove the protective foil from the stainless steel trim.

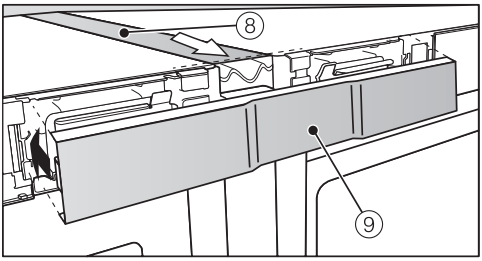

- Now position trim ⑧ along the top of the appliance so that it sits flush with the corners of the appliance and then carefully work the trim ⑧ into the groove.

Tip: Press both ridges along the entire length of the trim together. This simplifies the process of fitting the trim into the gap.

- Then place cover ⑨ into position at the top on the front of the appliance.

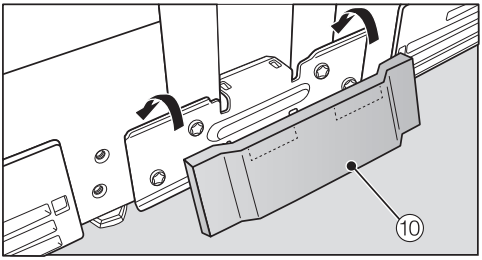

- Then place cover ⑩ into position at the bottom on the front of the appliance.

- Connect the side-by-side combination to the mains as described in the operating and installation manual.
- On appliances with an ice-maker connect the appliance to the mains water supply as described in the operating and installation manual.

⚠ Caution! Risk of damage when moving the appliance combination!

The assembled side-by-side combination is very heavy. Incorrect moving can cause dents

Follow the instructions on how to move it.

- The side-by-side combination must be pushed very carefully into position.

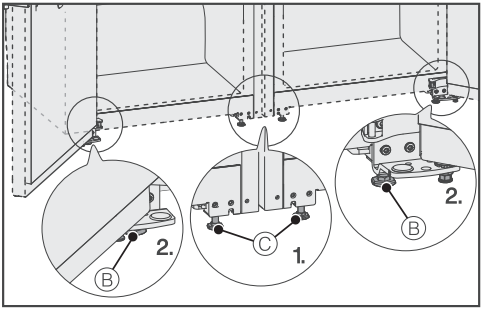

- Adjust the height of the side-by-side combination again if necessary via the two adjustable feet using spanner ⑪.

1. Unscrew the middle adjustable feet Ⓒ until they touch the floor.
2. Unscrew the outer adjustable feet Ⓑ to align the appliance.

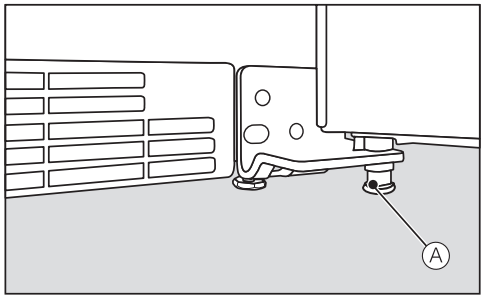

- Support the appliance doors on the hinge plate using the adjustable foot Ⓐ: Unscrew the adjustable foot Ⓐ until it touches the floor. Then unscrew it by a further 90°.

Aligning the appliance doors

The appliance door(s) can be height-adjusted at the lower hinge plates.

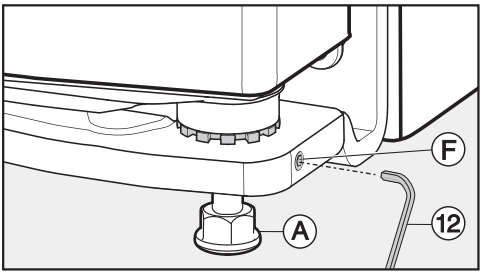

■ Unscrew the set screw Ⓕ a maximum of one turn using the Allen key ⑫ supplied.

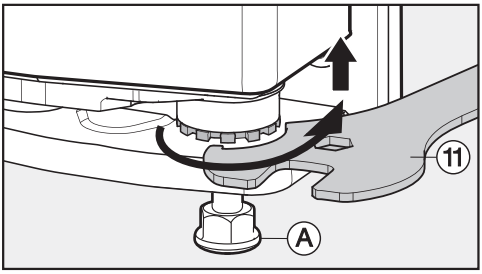

■ Adjust the height of the hinge pin with the spanner ⑪ supplied. The appliance is delivered with the hinge pin fully screwed in.

- To raise the door: turn it clockwise.
- To lower the door: turn it anti-clockwise.

■ Tighten the set screw Ⓕ. The hinge pin is fastened again.

Changing the door hinging

The refrigeration appliance is supplied with left-hand hinging. If right-hand hinging is required, the hinges can be changed.

Do not change the hinging if this refrigeration appliance is going to be installed side-by-side with another refrigeration appliance.

⚠ Danger of injury and damage when changing the door hinging.

There is an increased danger of injury and damage if the refrigeration appliance is installed by a single person.

Always change the door hinging with the help of a second person.

If the door seal is damaged or has slipped out of its groove, the appliance door may not close properly and cooling performance will be reduced. Condensate will build up in the interior cabinet and this can cause a build-up of ice.

Do not damage the door seal and ensure it does not slip out of its groove.

Preparing to change the door hinging

To change the door hinging, you will need the following tools:

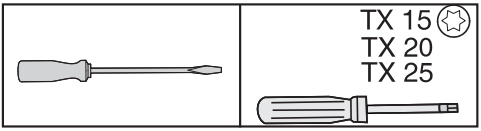

- Place a suitable cover on the floor in front of the appliance to protect the appliance door and your floor from damage.
- Remove the shelves/bottle shelf from the appliance door.

Removing the top covers

- Open the appliance door.

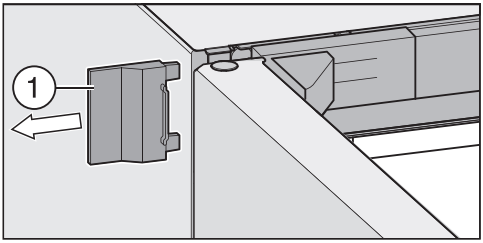

- Push off the right outer cover ①.

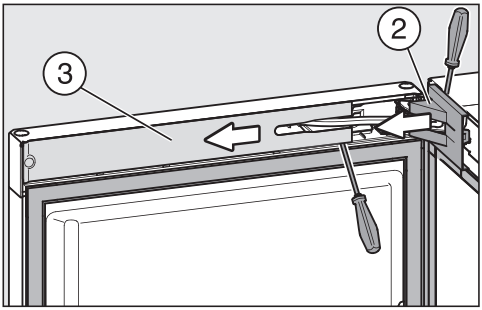

- Remove the cover ② from the door hinge and the cover ③ from the soft-close mechanism.

Removing the soft-close mechanism

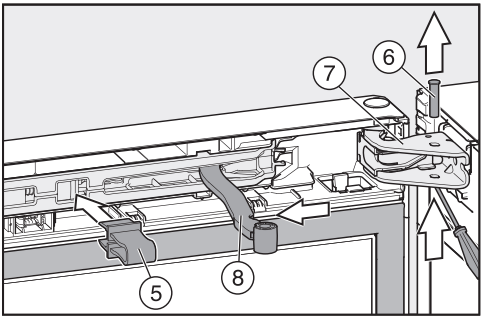

- Click the red safety device ⑤ (supplied with the refrigeration appliance) into place in the opening.

The safety device prevents the soft-close mechanism and the hinge plate from snapping shut.

Do not remove the red safety device until instructed to do so.

- Push the pin ⑥ out of the door hinge ⑦ and remove it.
- Move the hinged arm ⑧ of the soft-close mechanism away from the door hinge.

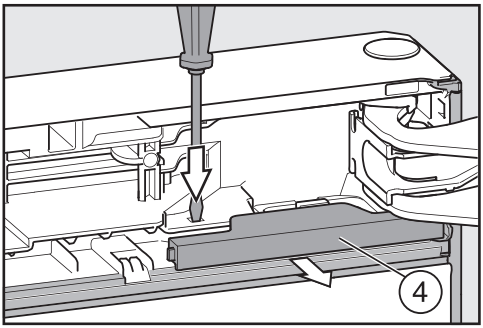

- Use a flat-head screwdriver to push the tab down and pull the cover ④ out of the coupling.

Removing the appliance door

⚠ Danger of injury when removing the appliance door.
The appliance door is not secure as soon as the pin has been removed from the door hinge.
The appliance door must be held by a second person.

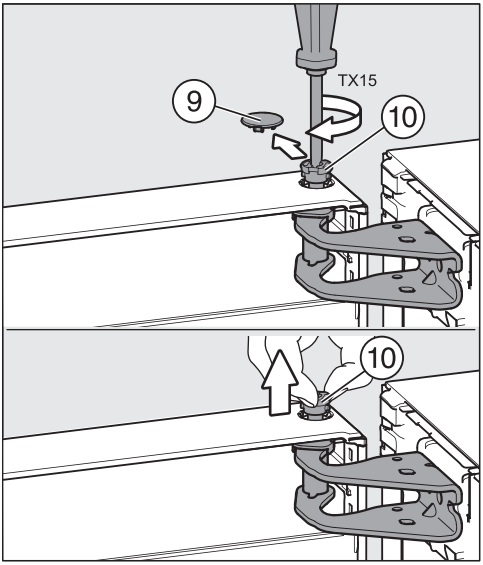

- Carefully pull off the safety cover ⑨.
- Loosen the pin ⑩ slightly (approx. ¼ turn) until it clicks.
- Now use your fingers to pull the pin ⑩ right out.
- Lift the appliance door off and place it carefully to one side.

Changing the lower hinge plate over

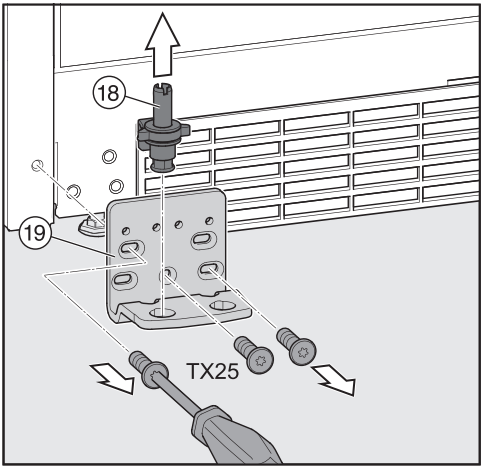

- Pull the hinge pin ⑱ complete with washer and adjustable foot upwards to remove.
- Unscrew the hinge plate ⑲.

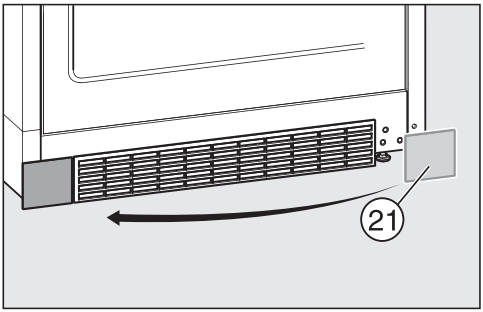

- Remove the cover ㉑ and refit on the opposite side.

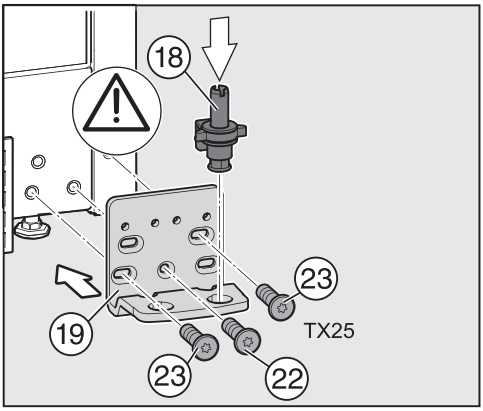

- Secure the hinge plate ⑲ on the opposite side, starting with the screw ㉒ in the middle at the bottom.
- Then screw in the other two screws ㉓.
- Reinsert the hinge pin ⑱ complete with washer and adjustable foot.

Important! The latch on the hinge pin must point to the back again.

Changing the upper door hinge over

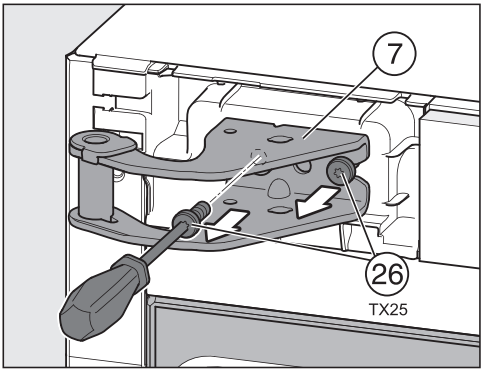

- Unscrew the screws ㉖ on the door hinge ⑦ and remove it.

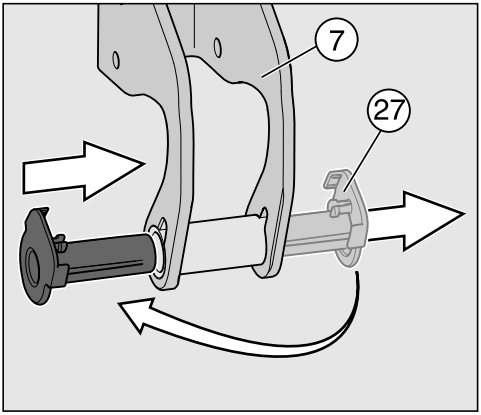

- Pull the bearing bush ㉗ out of the guide on the door hinge ⑦ and refit it on the opposite side.

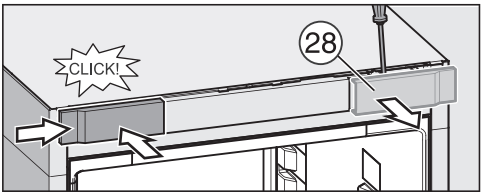

- Slide the cover ㉘ off to the side.
- Turn the cover 180° and refit it on the opposite side. Push on the cover from the side and click it into position.

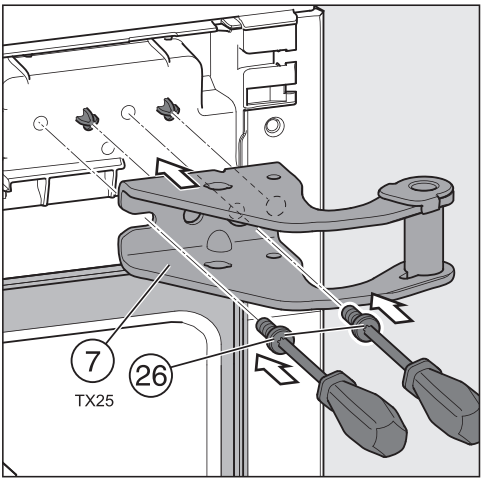

- Fit the upper door hinge ⑦ onto the pins on the refrigeration appliance.
- Secure the door hinge ⑦ with the screws ㉖.

Preparing the appliance door

Tip: Spread a suitable cover over a stable surface to protect the appliance door from damage. Place the appliance door on it with the outside facing down.

Change the door opening aid over

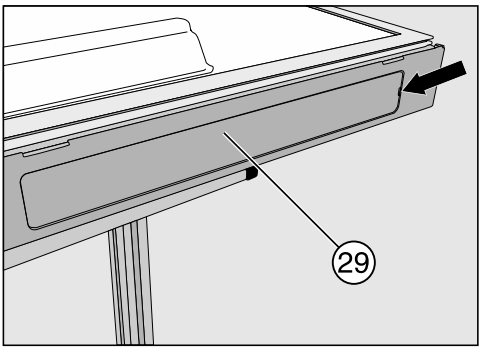

- Remove cover ㉙ from the opening for the recessed handle.

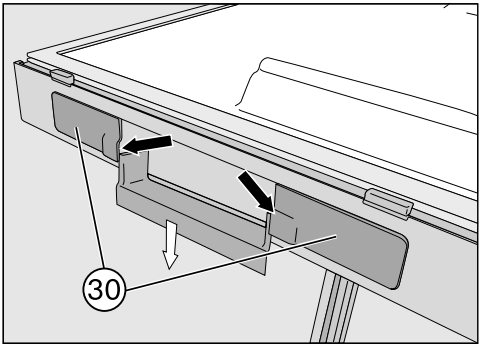

- Remove the covers ㉚ on the right and left of the recessed handle.

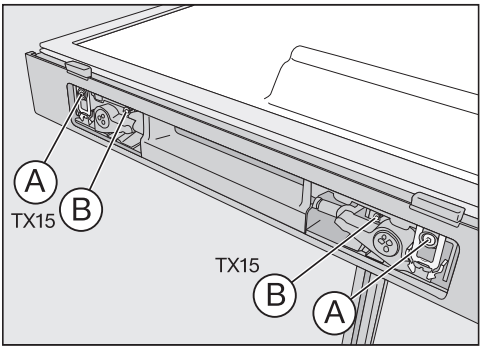

■ Fully unscrew the screw with the grey plastic collar Ⓐ and the screw without the collar Ⓑ.

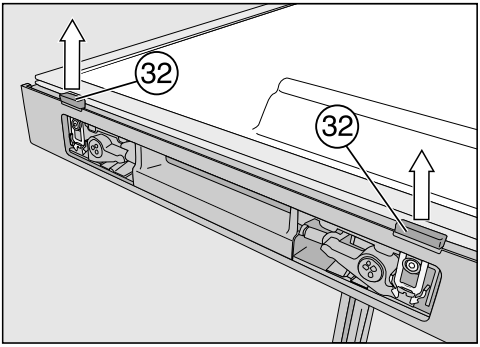

■ Pull the door opening sliders ㉜ firmly upwards to remove them.

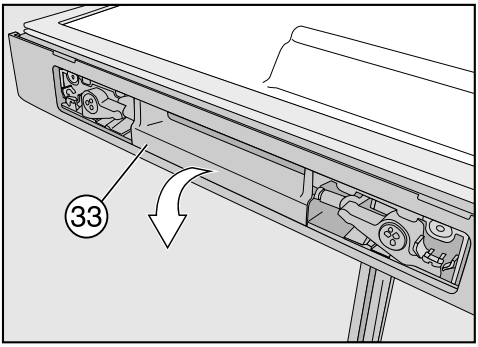

■ Remove the door opening aid ㉝.

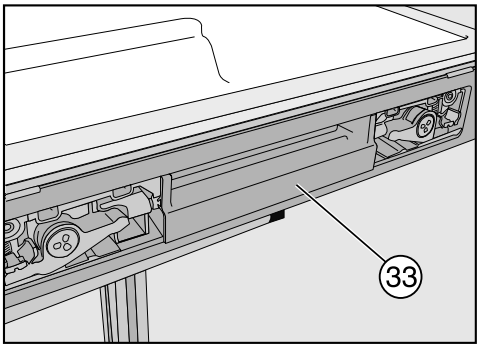

■ Refit door opening aid ㉝ on the opposite side.

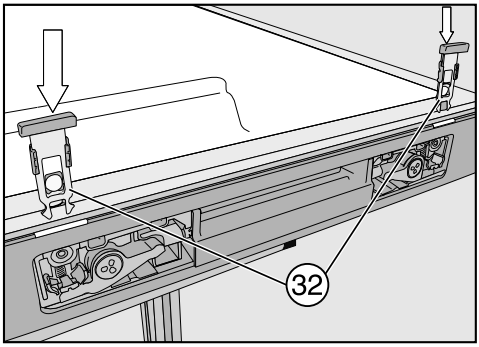

■ Push door opening slider ㉜ through the slots until it clicks into position.

The flush side of the door opening slider must face the door seal. The plastic lug on the slider must not abut the door seal but must point towards the outer edge of the door.

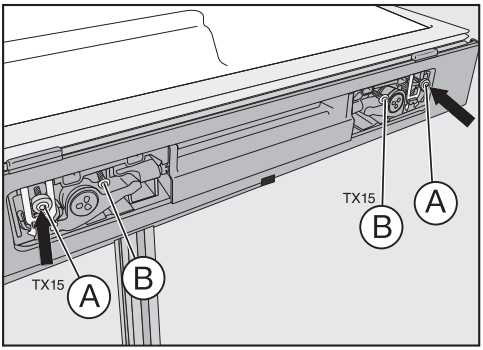

- Secure the door opening aid using the screw with the plastic collar Ⓐ and the screw without a plastic collar Ⓑ. Do not overtighten the screws!

Tip: Check whether the door opening aid moves easily by pressing it. If it does not move freely, the screws should be loosened slightly.

- Fit covers ㉙ and ㉚.

Changing the soft-close mechanism over

If you want to limit the door opening angle to approx. 90° you need to fit the door opening angle limiter supplied before refitting the soft-close mechanism (see “Installation – Fitting the appliance door opening angle limiter”).

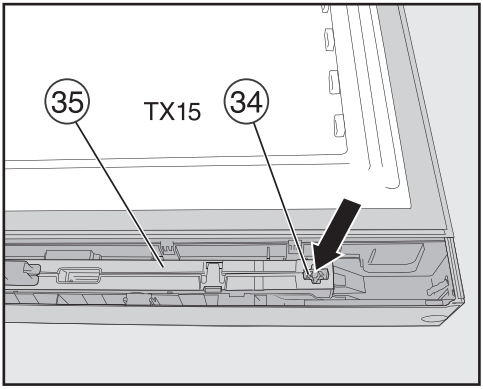

- Undo and remove the screw ㉞ on the soft-close mechanism ㉟ and insert a screwdriver behind the soft-close mechanism.

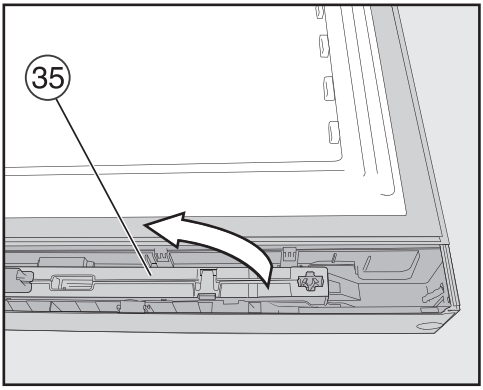

- Remove the soft-close mechanism ㉟ and turn it 180°.

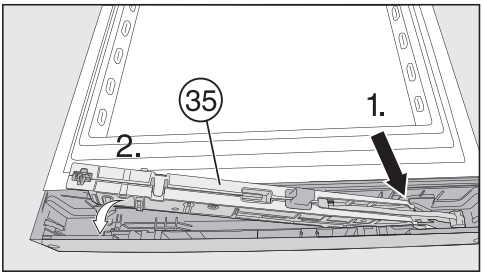

- Insert the soft-close mechanism ㉟ on the door hinge side (at an angle initially) so that it clicks into position.
- Then press the other end of the soft-close mechanism into the opening.
- Secure the soft-close mechanism with the screw ㉞.

Fit the bearing bush supplied into the upper appliance door

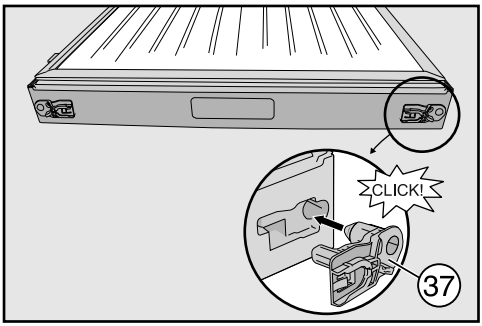

- Fit the bearing bush ㊲ (supplied with the appliance) in the opening on the lower edge of the appliance door.
- Remove the bearing bush from the opposite side.

Tip: Keep the bearing bush in case you want to change over the door hinging again at a later date.

Changing over the bearing bush stopper

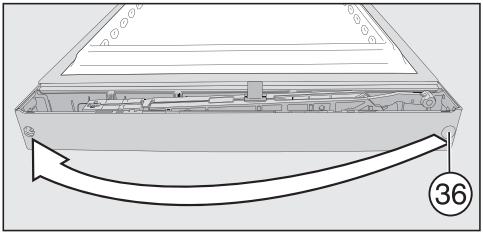

- Pull the stopper out of the door bearing bush ㊱ and replace it on the opposite side.

Refitting the appliance door

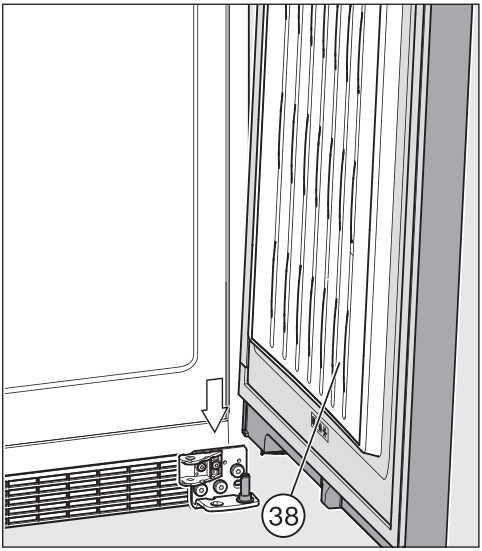

- Place the appliance door ㊳ onto the hinge pin from above and guide the upper opening on the hinge side of the door onto the door hinge with the bearing bush.

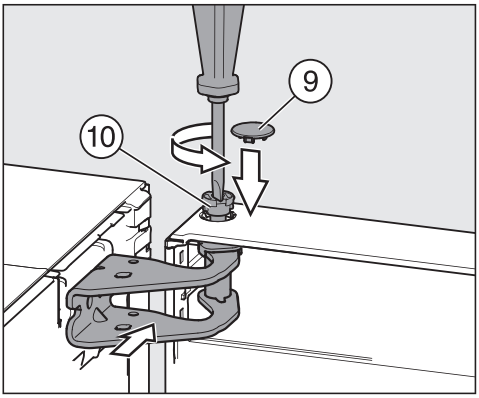

- Use your fingers to insert the pin ⑩ into the door bearing bush.
- Screw in the pin ⑩ (by approx. ¼ turn) until it clicks into position.
- Fit the safety cover ⑨ on to the pin.

The appliance door is not secure until the safety cover ⑨ has been correctly fitted.

Securing the soft-close mechanism

- Open the appliance door 90°.

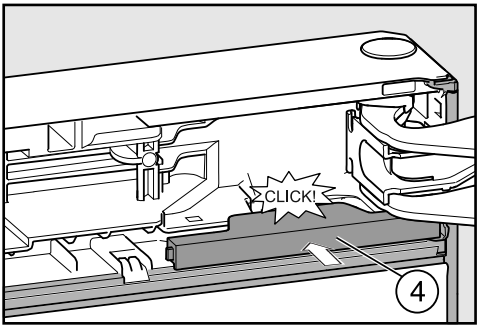

- Push on the cover ④ until it clicks into position.

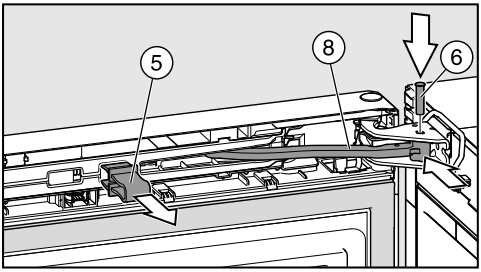

- Push the hinged arm ⑧ into the opening on the door hinge.
- Insert the pin ⑥ into the door hinge from above. Turn this with a screw-driver (by approx. ¼ turn) until both latches on the pin click into position correctly in the grooves.
- Pull out the red safety device ⑤.

Tip: Keep the red safety device in case you want to change the door hinging again at a later date.

Fitting the upper covers

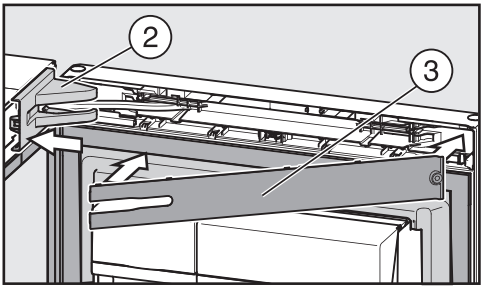

- Fit the cover ② on the door hinge.
- Fit the panel ③ so that it clicks into position.

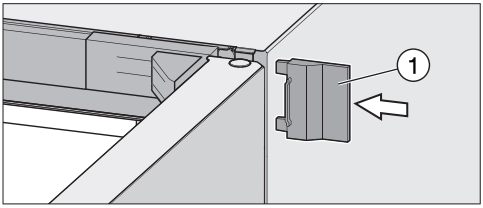

- Push on the outer cover ①.
- Close the appliance door.

Aligning the appliance doors

The appliance door can be aligned with the appliance housing after it has been fitted.

In the following illustration, the appliance door is not shown in the closed position to make it easier to see what you have to do.

To align the appliance door, use the outer slots in the lower hinge plate:

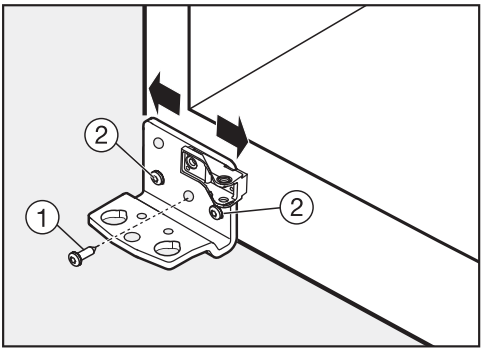

- Remove the middle screw ① from the hinge plate.
- Slightly loosen both outer screws ②.
- Align the appliance door by sliding the hinge plate to the left or right.
- Then tighten the screws ② again. The screw ① does not need to be refitted.

Mains water connection

Information about the mains water connection

⚠ Risk of injury and appliance damage if appliance is not connected properly.
Failing to connect the appliance properly can result in personal injury and/or material damage.
The appliance may only be connected to the mains water connection by suitably qualified specialists.

⚠ Disconnect the refrigeration appliance from the power supply before connecting it to the mains water supply.
Close the stopcock before connecting the refrigeration appliance to the mains water supply.

⚠ Risk to health and risk of damage due to contaminated water.
The quality of the incoming water must conform to the requirements for drinking water in the country where the refrigeration appliance is being used.
Connect the refrigeration appliance to the drinking water supply.

This refrigeration appliance meets the requirements of IEC 61770 and EN 61770.

Connection to the water supply must comply with the applicable regulations in the country where the appliance is being installed. All appliances and systems used to supply water to the refrigeration appliance must also comply with the applicable regulations in the respective country.

The water connection pressure needs to be between 150 kPa and 600 kPa (1.5 bar and 6 bar).

Use fresh water to ensure that the quality of the ice cubes remains high. Connect the stainless steel hose to the mains water supply and avoid connection to a water supply in which the water might stagnate.

Only use the stainless steel hose supplied. The stainless steel hose must not be shortened, extended or replaced by a different hose.

The stainless steel hose must only be replaced by an original Miele spare part. The food-grade, stainless steel hose is available to order from the Miele webshop, from the Miele Customer Service Department or from your local Miele dealer.

A stopcock must be provided between the stainless steel hose and the mains water supply to ensure that the water supply can be cut off if necessary.

Make sure that the stopcock is still accessible after the refrigeration appliance has been installed.

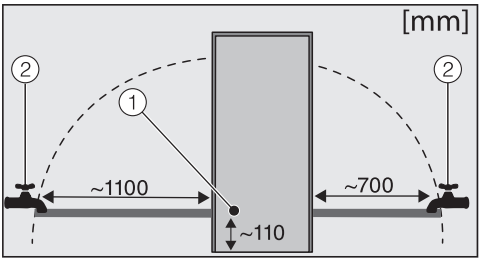

① Solenoid valve
② Stopcock

The stainless steel hose supplied is 4' 11" (1.5 m) m long.

Water supply

Ensure that the connections are tight and leak-proof.

⚠ Risk of damage to the stainless steel hose.
The water supply from the tap to the ice cube maker has been interrupted.
Do not bend or damage the stainless steel hose.

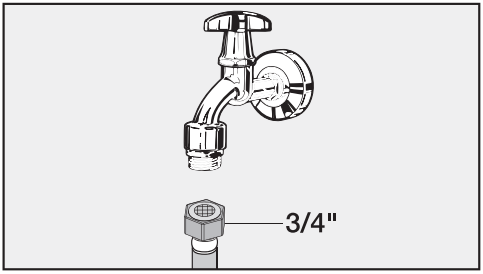

A stopcock with a metric R3/4 thread must be incorporated when connecting to the water supply.

The solenoid valve is located at the back of the refrigeration appliance on the bottom right. It also has a metric R3/4 thread.

⚠ Danger of injury from damaged tool.
If exposed to very high or very low temperatures, the tool supplied can become brittle and break.
Use the tool at room temperature only.

– Connecting the stainless steel hose to the refrigeration appliance

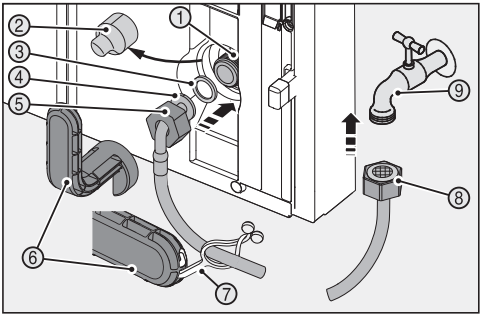

- Pull the cover ② off the thread of the solenoid valve ①.
- Push the nut ⑤ over the angled end of the hose ④ as far as it will go, holding the nut securely.
- Moisten the seal ③, then press the seal into the nut.

The seal should lie flush with the angled end of the hose and be held lightly in position.

> ⚠ Take care not to damage the thread of the solenoid valve.
> There is a risk of damaging the threads beyond repair.
> Position the nut straight on the thread and screw it carefully into place.

Tip: Lay out the straight end of the hose on the floor to the left of the appliance.

- Use two fingers to position the nut straight on the thread of the solenoid valve and screw it carefully into place.
- Tighten the nut with the tool supplied ⑥ by turning it clockwise until the maximum torque is reached and the tool is over-torqued.

– Connecting the stainless steel hose to the stopcock

- Unscrew the safety cap from the nut ⑧ on the straight end of the hose.
- Connect this nut ⑧ using the tool ⑥ supplied to the stopcock ⑨. Tighten the nut by turning it clockwise until the maximum torque is reached and the tool is over-torqued.

– Checking the mains water connection

- Open the stopcock ⑨ and switch the ice cube maker on (see “Selecting further settings” – “Switching the ice cube maker on and off”) as soon as the refrigeration appliance has been connected to the electricity supply. Check the entire water system for leaks.
- Fold the tab ⑦ on the tool ⑥ in and secure the tool to the stainless steel hose for safe-keeping.

Electrical connection

The refrigeration appliance must only be connected to an earthed socket using the connection cable supplied.

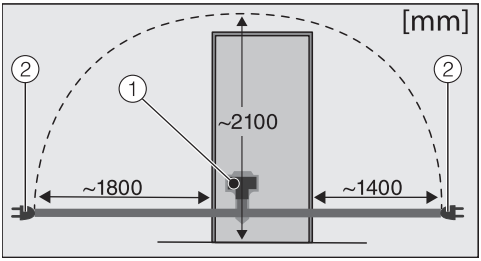

① Appliance plug connector
② Mains plug

A longer connection cable is available to order from the Miele Customer Service Department.

The socket must be easily accessible after the refrigeration appliance has been installed. If the socket is not easily accessible, ensure that a suitable means of disconnection is provided on the installation side for each pole.

⚠ Risk of fire from overheating.
Connecting the refrigeration appliance to a multi-socket plug adapter or to an extension lead can overload the cable.
For safety reasons, do not use an extension lead or multi-socket adapter.

The electrical installation must comply with VDE 0100 requirements.

For safety reasons, we recommend using a type A residual current device (RCD) in the assigned electrical installation for connecting the refrigeration appliance.

If the mains connection cable is damaged, it must only be replaced with a specific mains connection cable of the same type (available from the Miele Customer Service Department). For safety reasons, such replacement may only be carried out by a qualified specialist or the Miele Customer Service Department.

These operating instructions and the data plate indicate the nominal power consumption and the appropriate fuse rating. Compare this information with the data of the on-site electrical connection.
If in any doubt, consult a qualified electrician.

Do not connect the refrigeration appliance to a stand-alone inverter such as those used with an autonomous energy source, e.g. solar power. When the refrigeration appliance is switched on, power surges could result in an auto switch-off. This could damage the electronic module.

Connecting the appliance

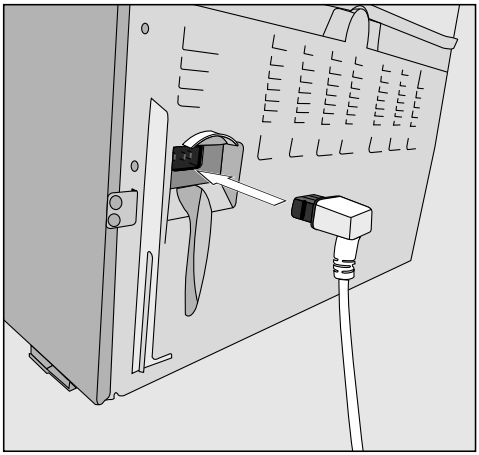

- Insert the plug connector into the socket at the back of the refrigeration appliance.

Make sure that the plug connector has clicked into position correctly.

- Insert the mains plug into the mains socket and switch on.

The appliance is now connected to the electricity supply:

⏻ will appear on the display.
Follow the steps described in “Switching on and off – Switching on”.

United Kingdom
Miele Co. Ltd., Fairacres, Marcham Road, Abingdon, Oxon, OX14 1TW
Tel: 0330 160 6600, Internet: www.miele.co.uk/service, E-mail: info@miele.co.uk

Australia
Miele Australia Pty. Ltd.
ACN 005 635 398
ABN 96 005 635 398
1 Gilbert Park Drive
Knoxfield, VIC 3180
Tel: 1300 464 353
Internet: www.miele.com.au

China Mainland
Miele Electrical Appliances Co., Ltd.
1-3 Floor, No. 82 Shi Men Yi Road
Jing' an District
200040 Shanghai, PRC
Tel: +86 21 6157 3500
Fax: +86 21 6157 3511
E-mail: info@miele.cn,
Internet: www.miele.cn

Hong Kong, China
Miele (Hong Kong) Ltd.
41/F - 4101, Manhattan Place
23 Wang Tai Road
Kowloon Bay, Hong Kong
Tel: (852) 2610 1025
Fax: (852) 3579 1404
Email:
customerservices@miele.com.hk
Website: www.miele.hk

India
Miele India Pvt. Ltd.
1st Floor, Copia Corporate Suites,
Commercial Plot 9,
Mathura Road, Jasola,
New Delhi - 110025
E-mail: customercare@miele.in
Website: www.miele.in

Ireland
Miele Ireland Ltd.
2024 Bianconi Avenue
Citywest Business Campus
Dublin 24
Tel: (01) 461 07 10
Fax: (01) 461 07 97
E-Mail: info@miele.ie
Internet: www.miele.ie

Malaysia
Miele Sdn Bhd
Suite 12-2, Level 12
Menara Sapura Kencana
Petroleum
Solaris Dutamas No. 1
Jalan Dutamas 1
50480 Kuala Lumpur, Malaysia
Phone: +603-6209-0288
Fax: +603-6205-3768

New Zealand
Miele New Zealand Limited
IRD 98 463 631
8 College Hill
Freemans Bay, Auckland 1011
New Zealand
Tel: 0800 464 353
Internet: www.miele.co.nz

Singapore
Miele Pte. Ltd.
29 Media Circle
#11-04 ALICE@Mediapolis
Singapore 138565
sTel: +65 6735 1191
Fax: +65 6735 1161
E-Mail: info@miele.com.sg
Internet: www.miele.sg

South Africa
Miele (Pty) Ltd.
63 Peter Place
Bryanston 2194
P.O. Box 69434
Bryanston 2021
Tel: (011) 875 9000
Fax: (011) 875 9035
E-mail: info@miele.co.za
Internet: www.miele.co.za

Thailand
Miele Appliances Ltd.
BHIRAJ TOWER at EmQuartier
43rd Floor Unit 4301-4303
689 Sukhumvit Road
North Klongton Sub-District
Vadhana District
Bangkok 10110, Thailand

United Arab Emirates
Miele Appliances Ltd.
Showroom 1
Eiffel 1 Building
Sheikh Zayed Road, Umm Al Sheif
P.O. Box 114782 - Dubai
Tel. +971 4 3044 999
Fax. +971 4 3418 852
800-MIELE (64353)
E-Mail: info@miele.ae
Website: www.miele.ae

Manufacturer: Miele & Cie. KG, Carl-Miele-Straße 29, 33332 Gütersloh, Germany

Miele

FNS 28463 E ed/cs

en-GB

M.-Nr. 10 999 980 / 03