Miele

Operating and installation instructions
Oven

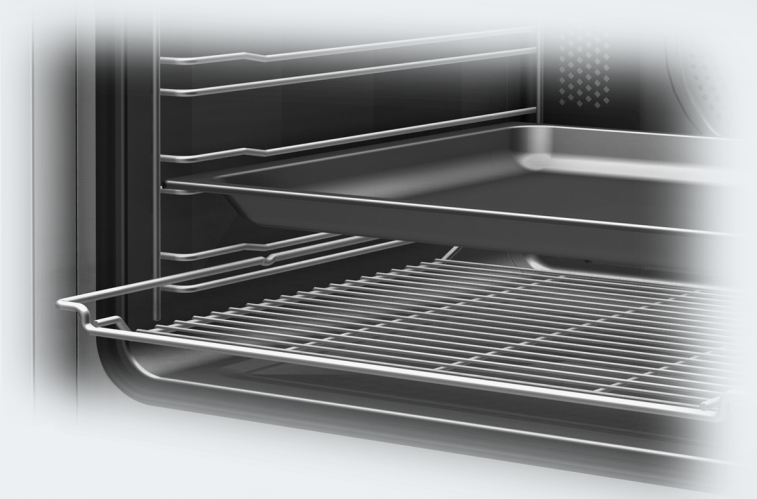

It is **essential** to read the operating and installation instructions before setup, installation, and commissioning. This prevents both personal injury and damage to the appliance.

en-AE

M.-Nr. 11 328 171

Contents

Warning and safety instructions **6**

Caring for the environment **15**

Guide to the appliance **16**

Controls **17**
On/Off sensor control 18
Display 18
Sensor controls 18
Symbols 20

Using the appliance **21**
Selecting a menu option 21
Changing a setting in a list 21
Changing the setting with a segment bar 21
Selecting a function or operating mode 21
Entering numbers 22
Entering letters 22
Activating MobileStart 22

Features **23**
Data plate 23
Scope of delivery 23
Accessories supplied and available to order 23
Safety features 27
PerfectClean treated surfaces 28
Pyrolytic accessories 28

Before using for the first time **29**
Miele@home 29
Basic settings 30
Heating up the oven for the first time and rinsing the steam injection system 31

Settings **33**
Settings overview 33
Opening the “Settings” menu 35
Language ⚑ 35
Time 35
Date 35
Lighting 35
Display 36
Volume 36
Units 36
Booster 37
Rapid cooling phase 37
Keeping warm 37

Recommended temperatures ... 37
Pyrolytic recommendation ... 38
Cooling fan run-on ... 38
Safety ... 38
Miele@home ... 39
Performing Scan & Connect ... 39
Remote control ... 40
Activating MobileStart ... 40
RemoteUpdate ... 40
Software version ... 40
Showroom programme ... 41
Factory default ... 41
Operating hours ... 41

Minute minder ... 42

Main and sub-menus ... 43

Energy saving tips ... 45

Operation ... 47
Changing values and settings for a cooking programme ... 47
Changing the temperature and core temperature ... 47
Setting cooking durations ... 48
Changing the set cooking durations ... 48
Deleting the set cooking durations ... 48
Cancelling a cooking programme ... 48
Pre-heating the oven compartment ... 49
Booster ... 49
Pre-heat ... 50
Rapid cooling phase ... 51
Keeping warm ... 51
Crisp function ... 52

Moisture plus ... 53
Starting a cooking programme with Moisture plus ... 53
Evaporate residual moisture ... 55

Automatic programmes ... 57
Categories ... 57
Using automatic programmes ... 57
Handy hints ... 57

Further applications ... 58
Defrost ... 58
Drying ... 58
Heat crockery ... 59

Contents

Keeping warm 60
Low temperature cooking 60
Frozen food/Ready meals 61

User programmes **62**

Baking **65**
Tips on baking 65
Notes on the cooking charts 65
Notes on the functions 66

Roasting **67**
Tips for roasting 67
Notes on the cooking charts 67
Notes on the functions 68
Food probe 69

Grilling **71**
Tips for grilling 71
Notes on the cooking charts 71
Notes on the functions 72

Cleaning and care **73**
Unsuitable cleaning agents 73
Removing normal soiling 74
Removing stubborn soiling (excluding the FlexiClip runners) 74
Pyrolytic cleaning of the oven compartment 74
Descale 77
Door removal 80
Dismantling the door 81
Fitting the door 84
Removing the side runners with FlexiClip runners 84
Lowering the top heat/grill element 85

Problem solving guide **86**

Service **91**
Contact in case of malfunction 91
Warranty 91

Installation **92**
Installation dimensions 92
Installation in a tall or base unit 92
Side view 93
Connections and ventilation 94
Installing the oven 95
Electrical connection 96

Cooking charts **97**
Creamed mixture 97
Shortcrust pastry 98
Yeast dough 99
Quark dough 100
Sponge mixture 100
Choux pastry, puff pastry, meringue 101
Savoury dishes 102
Beef 103
Veal 104
Lamb, game 105
Poultry, fish 106

Technical data **107**
Copyrights and licences for the communication module 107

This oven complies with all current local and national safety requirements. However, inappropriate use can lead to personal injury and damage to property.

Read the operating and installation instructions carefully before using the oven. They contain important information on safety, installation, use and maintenance. This prevents both personal injury and damage to the oven.

In accordance with standard IEC/EN 60335-1, Miele expressly and strongly advises that you read and follow the instructions in the chapter on installing the oven as well as the safety instructions and warnings.

Miele cannot be held liable for damage caused by non-compliance with these instructions.

Keep these instructions in a safe place and pass them on to any future owner.

Appropriate use

▶ This oven is intended for use in the home and in similar environments, for example
– in shops, offices and similar work settings
– by the guests in hotels
– in motels, bed & breakfasts and other typical home settings.
This appliance is not intended for outdoor use.

▶ The oven is not intended for outdoor use.

▶ The oven is intended for domestic use only to bake, roast, grill, cook, defrost and dry food.
All other types of use are not permitted.

▶ This oven may only be used by people with reduced physical, sensory or mental capabilities or lack of experience and knowledge if they are supervised whilst using it.
They may only use it unsupervised if they have been shown how to use it in a safe manner. They must be able to recognise and understand the dangers of misuse.

▶ The oven compartment is equipped with special lamps to cope with particular conditions (e.g. temperature, moisture, chemical resistance, abrasion resistance and vibration). These special lamps must only be used for the purpose for which they are intended. They are not suitable for room lighting. Replacement lamps may only be fitted by a Miele authorised technician or by your Miele dealer.

▶ The oven contains 1 light source corresponding to energy efficiency class F.

Safety with children

▶ Activate the system lock to ensure that children cannot switch the oven on by mistake.

▶ Children under 8 years of age must be kept away from the oven unless they are constantly supervised.

▶ Children aged 8 and older may only use the oven without supervision if they have been shown how to use it in a safe manner. Children must be able to understand and recognise the possible dangers caused by incorrect operation.

▶ Children must not be allowed to clean or maintain the oven unsupervised.

▶ Children should be supervised in the vicinity of the oven. Never allow children to play with the oven.

▶ Risk of suffocation due to packaging material. Whilst playing, children may become entangled in packaging material (such as plastic wrapping) or pull it over their head, presenting the risk of suffocation.
Keep packaging material away from children.

▶ Risk of injury caused by hot surfaces. Children's skin is far more sensitive to high temperatures than that of adults. External parts of the oven such as the door glass, control panel and the vent become quite hot.
Do not let children touch the oven when it is in operation.

▶ Danger of injury caused by hot surfaces. Children's skin is far more sensitive to high temperatures than that of adults. The oven gets much hotter during pyrolytic cleaning than during normal use.
Do not let children touch the oven during pyrolytic cleaning.

▶ Risk of injury from the open door.
The oven door can support a maximum weight of 15 kg. Children could injure themselves on an open door.
Do not let children sit on the open door, lean against it or swing on it.

▶ If you touch the sensor control, the door will fully open automatically. In doing so, it can knock against small children or animals, for example.
A buzzer will sound on the oven when you open the door remotely using a voice-based service. When opening the door, make sure that there are no people or objects in the area around the door.

Technical safety

▶ Unauthorised installation, maintenance and repairs can pose a considerable risk to the user. Installation, maintenance or repairs must only be carried out by a qualified specialist or Miele Customer Service.

▶ Damage to the oven can compromise your safety. Check the oven for visible signs of damage. Do not use a damaged oven.

▶ Temporary or permanent operation on an autonomous power supply system or a power supply system that is not synchronised with the mains power supply (e.g. island networks, back-up systems) is possible. A prerequisite for operation is that the power supply system complies with the specifications of EN 50160 or an equivalent standard.
The function and operation of the protective measures provided in the domestic electrical installation and in this Miele product must also be maintained in isolated operation or in operation that is not synchronised with the mains power supply, or these measures must be replaced by equivalent measures in the installation. As described, for example, in the current version of BS OHSAS 18001–2 ISO 45001.

▶ The electrical safety of this oven can only be guaranteed when correctly earthed. It is most important that this basic safety requirement is fulfilled. If in doubt, the electrical installation should be checked by a qualified electrician.

▶ The connection data (voltage and frequency) on the data plate of the oven must match the mains electricity supply in order to avoid the risk of damage to the oven. Compare this before connecting the appliance to the mains. If in any doubt, consult a qualified electrician.

▶ Multi-socket adapters and extension leads do not guarantee the required safety of the appliance. Do not use these to connect the oven to the mains electricity supply.

▶ For safety reasons, the oven may only be used when it has been built in and fully installed.

▶ The oven must not be used in a non-stationary location (e.g. on a ship).

▶ Risk of injury due to electric shock. Any contact with live connections or tampering with the electrical or mechanical components of the oven will endanger your safety and may lead to the oven malfunctioning.
Do not open the oven housing under any circumstances.

▶ While the oven is under warranty, repairs should only be undertaken by a Miele authorised technician. Otherwise the warranty will be invalidated.

▶ If defective safety-relevant components are replaced, Miele can only guarantee full compliance with safety requirements if genuine Miele replacement parts are used.

▶ If the oven is delivered without a mains supply cord, a special cord must be installed by a Miele authorised technician (see “Installation”, “Electrical connection”).

▶ If the supply cord is damaged, it must be replaced with a special supply cord by a Miele authorised technician (see “Installation”, “Electrical connection”).

▶ During installation, maintenance and repair work, the oven must be completely disconnected from the mains electricity supply. To ensure this:

- disconnect the mains fuse, or
- completely unscrew the screw-out fuse (in countries where this is applicable), or
- pull out the plug (if one is present) at the wall socket. To do this, pull the plug and not the mains supply cord.

▶ The oven requires a sufficient supply of cool air for efficient operation. Make sure that the supply of cool air is not hindered in any way (e.g. by fitting heat insulation strips in the housing unit). Furthermore, the required supply of cool air must not be excessively heated by other heat sources (e.g. solid fuel stoves).

▶ If the oven is built in behind a furniture front (e.g. a door), do not close the furniture door while the oven is in use. Heat and moisture can build up behind the closed furniture door. This can result in damage to the oven, housing unit and floor. Leave the furniture front/door open until the oven has cooled down completely.

Correct use

▶ Risk of injury caused by hot surfaces. The oven gets hot during operation. You could burn yourself on the heating elements, oven compartment, accessories or food.
Wear oven gloves when placing hot food in the oven or removing it and when adjusting oven shelves, for example, in a hot oven compartment.

▶ To avoid fuelling any flames, do not open the oven door if smoke occurs inside the appliance. Interrupt the process by switching the appliance off and disconnect it from the mains electricity supply. Do not open the door until the smoke has dispersed.

▶ Due to the high temperatures radiated, objects left near the oven could catch fire. Do not use the oven to heat up the room.

▶ Oils and fats can ignite if allowed to overheat. Never leave the oven unattended when cooking with oil or fats. Never attempt to put out oil or fat fires with water. Switch the oven off and extinguish the flames by leaving the door closed.

▶ Grilling food for excessively long cooking durations can cause it to dry out with the risk of catching fire. Do not exceed the recommended cooking durations.

▶ Certain foods dry out quickly and may catch fire due to high grill temperatures.
Never use grill modes to finish baking partially baked rolls or bread or to dry flowers or herbs. Instead, use the Fan plus or Conventional heat function.

▶ When using residual heat to keep food warm, corrosion from high air humidity and condensation can occur in the oven. This can also cause damage to the control panel, worktop and surrounding kitchen furniture. Keep the oven on and select the lowest temperature available for the selected function. The cooling fan will then continue to run automatically.

▶ Food which is stored in the oven compartment or left in it to be kept warm can dry out and the moisture released can lead to corrosion damage in the oven. Always cover food that is left in the oven to keep warm.

▶ An accumulation of heat can cause the enamel on the oven compartment floor to crack or flake off.
Never line the floor of the oven compartment with aluminium foil or oven liners.
If you wish to place crockery on the floor of the oven compartment during cooking, or place crockery on the floor of the oven compartment to heat it up, you can do so, but only with the Fan plus or Eco Fan heat function, without the Booster function.

▶ The oven compartment floor can become damaged by items being pushed around on it. When placing pots, pans or crockery on the oven compartment floor, ensure that you avoid pushing them around.

▶ Risk of injury caused by steam. Pouring a cold liquid onto a hot surface creates steam, which can cause severe scalding. The sudden temperature change can also cause damage to hot enamelled surfaces. Never pour cold liquids directly onto hot enamelled surfaces.

▶ Danger of injury caused by steam. During cooking processes using moisture and during the residual moisture evaporation process steam is produced which can cause serious injury by scalding. Never open the door while steam is being injected or during the evaporation of residual water.

▶ It is important that the temperature in the food being cooked is evenly distributed and sufficiently high. This can be achieved by stirring or turning the food.

▶ Plastic dishes that are not suitable for use in an oven will melt and may ignite at high temperatures, and can damage the oven.
Use only plastic containers that are suitable for use in an oven. Follow the manufacturer's instructions.

▶ Heating up food in closed containers, such as tins or sealed jars, will result in an increase in pressure, which can cause them to explode. Do not heat up unopened tins or jars of food in the oven.

▶ Risk of injury from the open door. You could bang into the open door or trip over it. Avoid leaving the door open unnecessarily.

▶ The door can support a maximum load of 15 kg. Do not lean or sit on an open door, or place heavy items on it. Make sure that nothing gets trapped between the door and the oven compartment. This could damage the oven.

The following applies to stainless steel surfaces:

▶ Adhesives will damage the stainless steel surface and cause it to lose its dirt-repellent protective coating. Do not use sticky notes, adhesive tape or other types of adhesive on the stainless steel surface.

▶ Magnets can cause scratches. Do not use the stainless steel surface as a magnetic notice board.

Cleaning and care

▶ Risk of injury due to electric shock. The steam from a steam cleaning appliance could reach live electrical components and cause a short circuit. Do not use a steam cleaner to clean the appliance.

▶ Coarse soiling in the oven compartment can cause thick smoke to develop. Coarse soiling should be removed from the oven compartment before running the pyrolytic cleaning programme.

▶ Risk of injury caused by hazardous steam. During pyrolytic cleaning, steam, which can irritate mucous membranes, can be released.
During pyrolytic cleaning, do not stay in the kitchen for longer periods of time and do not let children and pets enter the kitchen. It is important to ensure that the kitchen is well ventilated during pyrolytic cleaning. Prevent the odour from escaping into other rooms.

▶ The side runners can be removed (see “Cleaning and care” – “Removing the side runners with FlexiClip runners”). Refit the side runners correctly.

▶ Scratches on the door glass can cause the glass to break. Do not use abrasive cleaners, hard sponges, brushes or sharp metal tools to clean the door glass.

▶ In warm, moist environments, there is a higher probability of pest infestations (such as cockroaches). Ensure the oven and the area surrounding it are always kept clean.
Damage caused by pests is not covered by the warranty.

Accessories

▶ Miele assumes no liability for the use of accessories that are not genuine Miele accessories. Miele is not liable for warranty, guarantee and/or product liability claims if damage or defects are due to the use or installation of accessories that do not originate from Miele or have not been approved by Miele.

▶ Miele original spare parts are kept in stock for at least 10 years and up to 15 years after discontinuation of your oven.

▶ The Miele gourmet oven dish HUB 5000/HUB 5001 (if available) must not be inserted into shelf level 1. This will damage the floor of the oven. The lack of clearance will create an accumulation of heat which can cause the enamel to crack or flake off. Never place a Miele oven dish on the upper support of shelf level 1 either as it will not be secured by the non-tip safety notches. As a general rule, use shelf level 2.

▶ Only use the Miele food probe supplied with the appliance. If it is faulty, it must be replaced with a new original Miele food probe.

▶ The plastic on the food probe can melt at very high temperatures. Do not use the food probe when using the grill functions. Do not store the food probe in the oven compartment when it is not being used.

▶ Accessories that are not suitable for pyrolytic cleaning will be damaged by the high temperatures. Remove all accessories that are not suitable for pyrolytic cleaning from the oven compartment before starting the pyrolytic cleaning programme. This also applies to optional accessories that are not suitable for pyrolytic cleaning (see “Cleaning and care”).

Disposing of the packaging material

The packaging material is used for handling and protects the appliance from transport damage.

Recycling the packaging material reduces the use of raw materials. Your Miele dealer will take the packaging material away.

Disposal of your old appliance

Electrical and electronic appliances often contain valuable materials. They also contain materials which, if handled or disposed of incorrectly, could be potentially hazardous to human health and to the environment. They are, however, essential for the correct functioning of your appliance. Please do not therefore dispose of it with your household waste.

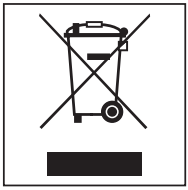

Please contact your Miele dealer. They will provide support for its disposal.

Ensure that it presents no danger to children while being stored for disposal.

Guide to the appliance

Oven

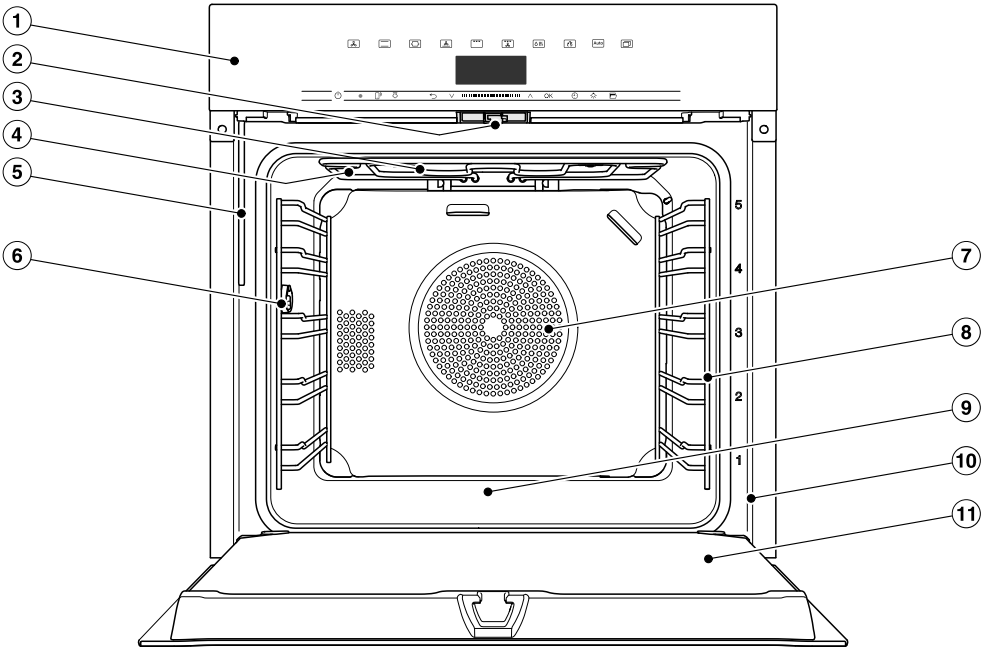

① Control elements

② Door lock

③ Top heat/grill element

④ Steam inlet openings

⑤ Water intake pipe for the steam injection system

⑥ Connection socket for the food probe

⑦ Air inlet for the fan with ring heating element behind it

⑧ Side runners with 5 shelf levels

⑨ Oven floor with bottom heat element underneath it

⑩ Front frame with data plate

⑪ Door

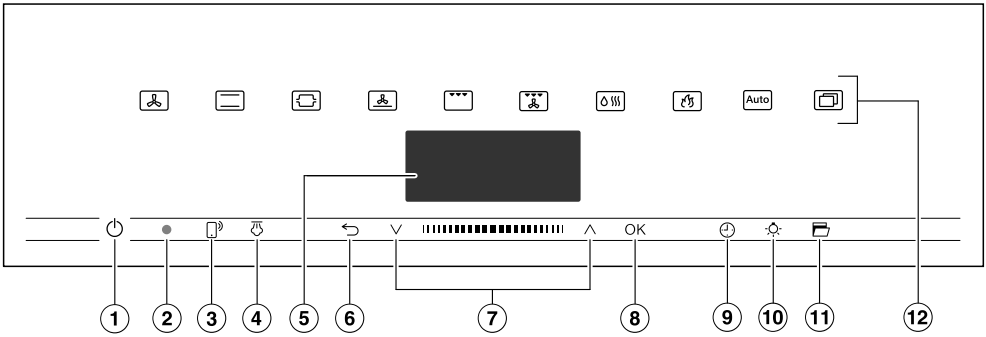

① Recessed ⏻ On/Off sensor control
For switching the oven on and off

② Optical interface
(For your Miele dealer only)

③ sensor control
For controlling the oven via your mobile device

④ sensor control
For steam injection

⑤ Display
For displaying the time of day and information on operation

⑥ sensor control
For going back a step and for changing menu options during a cooking programme

⑦ Navigation area with ∧ and ∨ arrow buttons
For scrolling through lists and for changing values

⑧ *OK* sensor control
For selecting functions and saving settings

⑨ sensor control
For setting a minute minder, the cooking duration or the start or end time for the cooking programme

⑩ sensor control
For switching the oven interior lighting on and off

⑪ sensor control
For opening the door

⑫ Sensor controls
For selecting functions, automatic programmes and settings

On/Off sensor control

The ⏻ On/Off sensor control is recessed and reacts to touch.

Use this sensor control to switch the oven on and off.

Display

The display is used for showing the time of day or information about functions, temperatures, cooking durations, automatic programmes and settings.

After switching the oven on with the ⏻ On/Off sensor control, Select function will appear in the main menu.

Sensor controls

The sensor controls react to touch. Every touch of a sensor is confirmed with an audible keypad tone. You can turn this keypad tone off using Further ⧉ | Settings | Volume | Keypad tone.

If you want the sensor controls to respond even when the oven is switched off, select the Display | QuickTouch | On setting.

Sensor controls above the display

For information on the functions and operating modes, see “Main and sub-menus”, “Settings”, “Automatic programmes” and “Further applications”.

Sensor controls under the display

Sensor control	Function
	If you want to control the oven from your mobile device, you must have the Miele@home system, switch on the Remote control setting and touch this sensor control. The sensor control then lights up and the MobileStart function is available. As long as this sensor control is lit, you can control the oven via your mobile device (see “Settings – Miele@home”).
	After selecting manual steam injection for the Moisture plus function, you can use this sensor control to inject steam. This sensor control lights up orange as soon as steam injection becomes possible. appears in the display while steam injection is in progress.
	Depending on which menu you are in, this sensor control will take you back a level or back to the main menu. If a cooking programme is in progress at the same time, use this sensor control to change values and settings such as the temperature or booster function for the programme, or to cancel the programme.
∧ ∨	In the navigation area, use the arrow buttons or the area between them to scroll up or down in the selection lists. The menu options will be highlighted one after the other as you scroll through them. The desired menu option must be highlighted before you can select it. You can change the values or settings that are highlighted by using the arrow buttons or the area between them.

Controls

Sensor control	Function
OK	Functions highlighted in the display can be selected by touching the *OK* sensor control. The selected function can then be changed. Confirm with *OK* to save changes. If information appears in the display, select *OK* to confirm the message.
	If no cooking programme is in progress, you can use this sensor control to set a minute minder (e.g. when boiling eggs) at any point. If a cooking programme is in progress at the same time, you can set a minute minder, the cooking duration and a start or end time for the programme.
	Select this sensor control to switch the oven interior lighting on and off. Depending on the setting selected, the oven interior lighting switches off after 15 seconds or remains constantly switched on or off.
	Use this sensor control to open the door automatically. To close it, press against the door frame with your hand or with a suitable pot holder or oven glove until the door shuts.

Symbols

The following symbols may appear in the display:

Symbol	Meaning
i	This symbol indicates that there is additional information and advice about using the appliance. Press the *OK* sensor control to confirm the information.
	Minute minder
✓	A tick indicates the option which is currently selected.
	Some settings, e.g. display brightness and buzzer volume are selected using a bar chart.
	The system lock prevents the oven being switched on by mistake (see “Settings – Safety”).

Use the ∧ and ∨ arrow buttons or the area between them in the navigation area to use the oven.

As soon as you reach a confirmable value, message or setting, the *OK* sensor control will light up orange.

Selecting a menu option

- Touch the ∧ or ∨ arrow buttons or swipe to the right or left in the area until the desired menu option is highlighted.

Tip: If you press and hold the arrow button, the list continues scrolling automatically until you release the arrow button.

- Confirm your selection with *OK*.

Changing a setting in a list

- Touch the ∧ or ∨ arrow buttons or swipe to the right or left in the area until you reach the desired value or the desired setting is highlighted.

Tip: A ✓ tick will appear beside the current setting.

- Confirm with *OK*.

The setting is now saved. This will take you back to the previous menu.

Changing the setting with a segment bar

Some settings are represented by a bar with seven segments. If all of the segments are illuminated, the maximum value is selected.

If none of the segments are illuminated, or only one of them is, the minimum value is selected or the setting is switched off altogether (e.g. volume).

- Touch the ∧ or ∨ arrow buttons or swipe to the right or left in the area until you reach the desired setting.
- Confirm your selection with *OK*.

The setting is now saved. This will take you back to the previous menu.

Selecting a function or operating mode

The sensor controls for the functions and operating modes (e.g. Further ⧉) are located above the display (see “Controls” and “Settings”).

- Touch the sensor control for the desired function.

The sensor control on the fascia panel lights up orange.

- Under Further ⧉, scroll through the lists until the desired menu option is highlighted.
- Set the values for the cooking process.
- Confirm with *OK*.

Changing the function

You can change to another function during a cooking programme.

The sensor control for the previously selected function lights up orange.

- Touch the sensor control of the new function or operating mode.

The new function appears in the display with its corresponding recommended values.

The sensor control for the new function lights up orange.

Under Further ⧉, scroll through the lists until you reach the desired menu option.

Entering numbers

Numbers that can be changed are highlighted.

- Touch the ∧ or ∨ arrow buttons or swipe to the right or left in the area until the desired number is highlighted.

Tip: If you press and hold an arrow button, the numbers continue scrolling automatically until you release the arrow button.

- Confirm with *OK*.

The changed number is now saved. This will take you back to the previous menu.

Entering letters

Letters are entered via the navigation area. It is best to select short names.

- Touch the ∧ or ∨ arrow buttons or swipe to the right or left in the area until the desired character is highlighted.

The character you have selected will appear in the top line of the display.

Tip: A maximum of 10 characters can be used.
You can delete the characters one at a time with ⮌.

- Select the rest of the characters.
- Once you have entered the name, select ✓.
- Confirm with *OK*.

The name is now saved.

Activating MobileStart

- Select the sensor control to activate MobileStart.

The sensor control lights up. You can operate your oven remotely with the Miele app.

Directly operating the oven takes priority over operating it via the remote control function on the app.

You can use MobileStart as long as the sensor control is lit up.

A list of the models described in these operating and installation instructions can be found on the back page of this booklet.

Data plate

The data plate is located on the front frame, visible when the door is open.

The data plate states the model number, the serial number as well as connection data (voltage, frequency and maximum rated load).

Please have this information to hand, should you need to contact your Miele dealer regarding any questions or problems.

Scope of delivery

- Operating and installation instructions for using the oven
- A cookbook with recipes for the automatic programmes and other functions
- Food probe
- Opener
- Screws for securing your oven in the housing unit
- Descaling tablets and a plastic tube with suction cup for descaling the steam injection system
- Various accessories

Accessories supplied and available to order

Features will vary depending on model.

Side runners, universal tray and wire rack (or “rack” for short) are supplied as standard with the oven.

Depending on the model, your oven may also come supplied with some of the accessories listed here.

All the accessories listed as well as the cleaning and care products are designed for Miele ovens.

These are available to order via the Miele webshop, from Miele or from your Miele dealer.

When ordering, please quote the model number of your oven and the reference number of the accessories required.

Side runners

There are runners on the left and right of the oven compartment with shelves 5 1 for inserting accessories.

The numbers for the shelf levels are marked on the front frame.

Each level consists of 2 rails, one above the other.

The accessories (e.g. the rack) are pushed into the oven between the two rails.

The FlexiClip runners (if present) are fitted on the lower rail.

You can remove the side runners (see “Cleaning and care” – “Removing the side runners with FlexiClip runners”).

Baking tray, universal tray and rack with non-tip notches

Baking tray HBB 71:

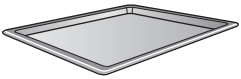

Universal tray HUBB 71:

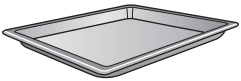

Rack HBBR 72:

These accessories are inserted into the oven between the two rails of a shelf in the side runner.

Always place the rack with the loading surface in the lower position.

These accessories have non-tip safety notches fitted in the middle of their short sides. The non-tip safety notches prevent the trays from being pulled out completely from the side runners when you only wish to pull accessories out partially.

If you are using the universal tray with the rack on top, insert the tray between the rails of a shelf of the side runners and the rack will automatically slide in above them.

FlexiClip runners HFC 72

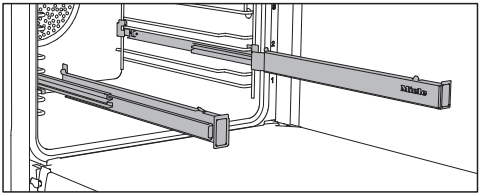

You can use the FlexiClip runners on shelf levels 1–4.

Push the FlexiClip runners right into the oven compartment before placing accessories on them.

The accessories will then automatically sit securely in between the stoppers at either end of each runner and be prevented from sliding off.

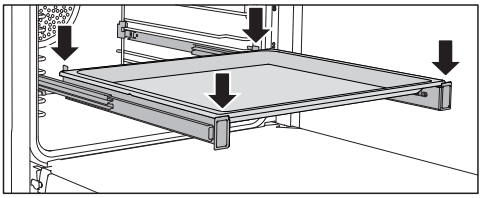

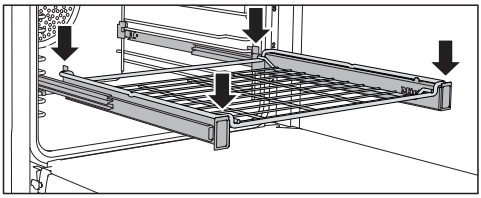

The FlexiClip runners can support a maximum load of 15 kg.

Fitting and removing FlexiClip runners

⚠ Danger of injury caused by hot surfaces.

The oven gets hot during operation. You could burn yourself on the heating elements, oven compartment or accessories.

Allow the heating elements, oven compartment and the accessories to cool before fitting or removing the FlexiClip runners.

The FlexiClip runners are fitted in between the two rails that make up a shelf level.

The FlexiClip runner with the Miele logo should be fitted on the right.

When fitting or removing the FlexiClip runners, **do not** extend them.

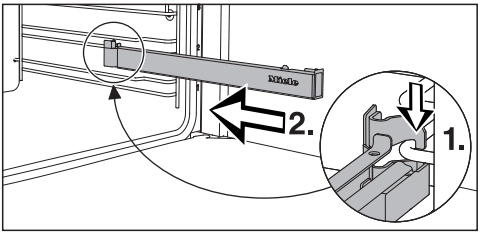

- Hook the FlexiClip runner onto the front of the lower rail of a shelf level (1.) and then push it along the rail into the oven compartment (2.).

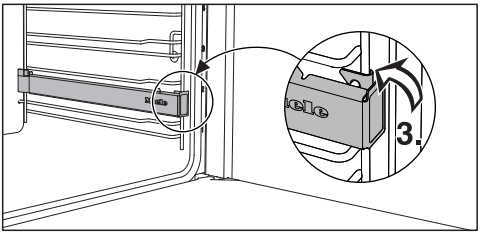

- Then secure the FlexiClip runner to the lower rail of the shelf level (3.).

If the FlexiClip runners are difficult to pull out after fitting, pull firmly on them once to release them.

To remove a FlexiClip runner, proceed as follows:

- Push the FlexiClip runner in all the way.

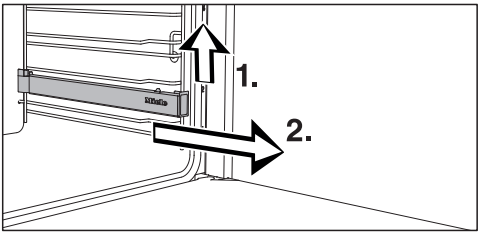

- Remove the FlexiClip runner by raising it at the front (1.) then pulling it forwards along the rail of the shelf level and out (2.).

Round baking trays

The **solid round baking tray HBF 27-1** is suitable for cooking pizzas, flat cakes made with yeast or creamed mixtures, sweet and savoury tarts, baked desserts, flat bread, and can also be used for frozen cakes and pizzas.

The **perforated round baking and AirFry tin HBFP 27-1** can be used for the same purposes as the **Gourmet baking and AirFry tray, perforated HBBL 71**.

The enamelled surface of both items of bakeware has been treated with PerfectClean.

- Insert the rack and place the round baking tray on the rack.

Gourmet baking and AirFry tray, perforated HBBL 71

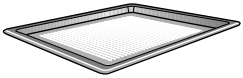

The fine perforations of the Gourmet baking and AirFry tray optimise cooking processes:

- Browning on the underside of baked goods made from fresh yeast and quark doughs as well as bread and rolls is improved.
  Roll out the dough on a level surface first and then place it on the Gourmet baking and AirFry tray.
- French fries, croquettes or similar items can be fried in a hot air flow without fat (AirFrying).

- During dehydrating/drying, the air circulation around the food for drying is optimised.

The enamelled surface has been treated with PerfectClean.

The **round baking and AirFry tin, perforated HBFP 27-1** can be used for the same purposes.

Baking stone HBS 70

The baking stone is ideal for items which need a well baked base such as pizza, quiche, bread, bread rolls and savoury snacks.
The baking stone is made from heat-retaining fireclay and is glazed. A paddle made of untreated wood is supplied with the baking stone for placing food on it and taking it off.

■ Slide the rack in and place the baking stone on it.

Grilling and roasting insert HGBB 71

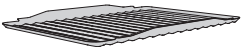

The grilling and roasting insert fits in the universal tray.
When grilling, roasting or AirFrying, the tray will collect meat juices and stop them from burning so that they can be used for making gravy and sauces.

The enamelled surface has been treated with PerfectClean.

HUB gourmet oven dishes
HBD gourmet oven dish lids

Unlike other oven dishes, Miele gourmet oven dishes can be placed in the oven directly on the shelf runners. They have non-tip safety notches like the rack to prevent them from being pulled out too far.
The surface of the oven dish has a non-stick coating.

Gourmet oven dishes are available in different depths. The width and the height are the same.

Suitable lids are available separately. Please quote the model number when ordering.

Depth: 22 cm	**Depth: 35 cm**
HUB 5000-M HUB 5001-M*	HUB 5001-XL*

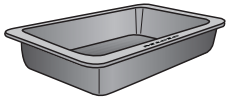

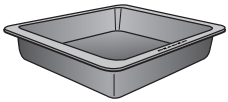

HBD 60-22	HBD 60-35

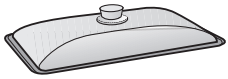

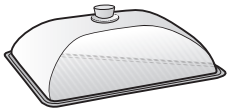

* Suitable for use on induction hobs

Food probe

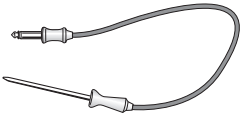

Using the food probe enables the temperature during the cooking programme to be monitored very precisely (see “Roasting” – “Food probe”).

■ When using the food probe, do not insert the FlexiClip runners with wire rack on shelf level 4, otherwise this will block the socket.

Handle HEG

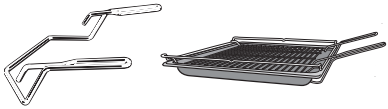

The handle makes it easier to take the universal tray, baking tray and rack out of the oven.

Accessories for cleaning and care

- Opener
  The opener can be used to lever the door open during a power cut. To do so, push the opener at an angle into the gap on the outside edge of the door at the top between the fascia panel and the door.
- Descaling tablets, plastic tube with suction cup for descaling the oven
- Miele all-purpose microfibre cloth
- Miele oven cleaner

Safety features

- **System lock** 🔒
  (see “Settings – Safety”)
- **Sensor lock**
  (see “Settings – Safety”)
- **Cooling fan**
  (see “Settings – Cooling fan run-on”)
- **Safety switch-off**
  This safety switch-off is activated automatically if the oven has been operating for an unusually long period of time. The period of time will depend on the particular oven function being used.
- **Ventilated door**
  The oven door is made of glass panes that have a heat-reflective coating on part of their surface. When the oven is operating, air is passed through the door to keep the outer pane cool.
  The door can be removed and disassembled for cleaning purposes (see “Cleaning and care”).
- **Door locking** for pyrolytic cleaning
  At the beginning of a pyrolytic cleaning programme the door will lock for safety reasons. The door will only be unlocked when the temperature in the oven compartment has dropped to below 280 °C.

PerfectClean treated surfaces

PerfectClean surfaces have very good non-stick properties and are exceptionally easy to clean.

Food can be easily removed from these surfaces. Soiling from baking and roasting can be easily removed from these surfaces.

Food can be sliced or cut up on PerfectClean surfaces.

However, do not use ceramic knives as these will scratch the PerfectClean surface.

Surfaces treated with PerfectClean enamel can be cleaned as you would clean glass.
Read the instructions in “Cleaning and care” so that the benefits of the non-stick properties and easy cleaning are retained.

PerfectClean treated surfaces:

- Universal tray
- Baking tray
- Grilling and roasting insert
- Gourmet baking and AirFry tray, perforated
- Round baking and AirFry tin, perforated
- Round baking tray

Pyrolytic accessories

See “Cleaning and care” for more information.

The following accessories can be left in the oven compartment during the pyrolytic cleaning programme:

- Side runners
- FlexiClip runners HFC 72
- Rack

Miele@home

Your oven is equipped with an integrated WiFi module.

In order to use it, you will need:

- A WiFi network
- The Miele app
- A Miele user account The user account can be created via the Miele app.

The Miele app will guide you as you connect your oven to your home WiFi network.

Once your oven is connected to your WiFi network, you can use the app, for example, to carry the following activities:

- Call up information on the operating status of your oven
- Retrieve information on oven cooking programmes that are in progress
- End cooking programmes that are in progress

Connecting your oven to your WiFi network will increase energy consumption, even when the oven is switched off.

Make sure that the signal of your WiFi network is sufficiently strong in the place where your oven is installed.

Availability of the WiFi connection

The WiFi connection shares a frequency range with other appliances (including microwave ovens and remote control toys). This can give rise to sporadic or even complete connection failures. Therefore, the availability of featured functions cannot be guaranteed.

Miele@home availability

The ability to use the Miele app depends on the availability of the Miele@home service in your country.

The Miele@home service is not available in every country.

For information about availability, please visit www.miele.com.

Miele App

The Miele App is available to download free of charge from the Apple App Store® or from the Google Play Store™.

Download on the App Store

GET IT ON Google Play

Basic settings

The following settings must be made before starting up for the first time. You can change these settings again at a later time (see “Settings”).

⚠ Risk of injury caused by hot surfaces.
The oven gets hot during operation.
For safety reasons, the oven may only be used when it has been fully installed.

The oven will switch on automatically when it is connected to the electricity supply.

Setting the language

- Select the desired language.

If you have selected the wrong language by mistake, proceed as described in “Settings – ⚑ Language”.

Setting the location

- Select the required location.

Setting up Miele@home

Set up “Miele@home” will appear in the display.

- To set up Miele@home now, select Continue and confirm with *OK*.
- To set it up at a later date, select Skip and confirm with *OK*.
  See “Settings – Miele@home” for information on setting up at a later date.
- To set up Miele@home now, select the desired connection method.

You will then be guided by the display and the Miele app.

Setting the date

- Set the year, then the month, and finally the day.
- Confirm with *OK*.

Setting the time

- Set the time of day in hours and minutes.
- Confirm with *OK*.

Completing the commissioning process

- Follow any further instructions in the display.

The oven is now ready for use.

Heating up the oven for the first time and rinsing the steam injection system

When the oven is heated up for the first time it may give off an unpleasant odour. This can be eliminated by heating the empty oven for at least an hour. It is a good idea to rinse out the steam injection system at the same time.

It is important to ensure that the kitchen is well ventilated during the heating process.
Prevent the odour from escaping into other rooms.

- Remove any protective wrapping and stickers from the oven and accessories.
- Before heating the oven compartment up, wipe the interior with a damp cloth to remove any dust or bits of packaging.
- Fit the FlexiClip runners in the side runners and insert all trays and the rack.
- Turn the oven on using the On/Off ⏻ sensor control.

Select function appears.

- Select Moisture plus.
- Select Moisture plus + Fan plus.

The recommended temperature will appear (160 °C).

The oven heating, lighting and cooling fan will switch on.

- Set the maximum possible temperature (250 °C).
- Confirm with *OK*.
- Select Automatic burst of steam.

The prompt to draw in water then appears.

- Fill a suitable container with the required amount of mains water.
- Open the door.
- Pull the water intake pipe forwards (located below the control panel on the left).

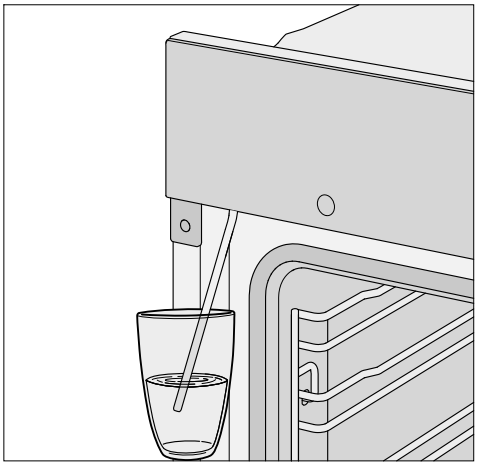

- Immerse the end of the water intake pipe in the container with the mains water.
- Confirm with *OK*.

The water intake process will begin.

The amount of water actually drawn up into the oven may be less than the amount specified as required, leaving a small amount in the container.

- Remove the water container after the water intake process and close the door.

The sound of the pump running can be heard again briefly. Residual water in the water intake pipe is being drawn into the oven.

The oven heating, lighting and cooling fan will switch on.

After a short time, a burst of steam will be released automatically.

⚠ Risk of injury caused by steam.
The steam escaping is very hot.
Do not open the door when the burst of steam is being released.

Heat the oven for at least an hour.

- After at least an hour, switch the oven off with the On/Off ⏻ sensor control.

Cleaning the oven compartment after heating it up for the first time

⚠ Danger of injury caused by hot surfaces.
The oven gets hot during operation. You could burn yourself on the heating elements, oven compartment or accessories.
Allow the heating elements, oven compartment and the accessories to cool before manual cleaning.

- Take all accessories out of the oven compartment and clean them by hand (see “Cleaning and care”).
- Clean the oven compartment with a clean sponge and a solution of hot water and washing-up liquid or a clean, damp microfibre cloth.
- Dry all surfaces with a soft cloth.

Leave the oven door open until the oven compartment is completely dry.

Settings overview

Menu option	Available settings
Language ⚑	... | deutsch | english | ... Location
Time	Show On | Off* | Night dimming Clock format 12 h | 24 h* Set
Date	
Lighting	On "On" for 15 seconds* Off
Display	Brightness ■■■■□□□ QuickTouch On | Off*
Volume	Buzzer tones Melodies* ■■■■□□□ Solo tone ■■■■■■■■□□□□□□ Keypad tone ■■■■□□□ Welcome melody On* | Off
Units	Temperature °C* | °F
Booster	On* Off
Rapid cooling phase	On* Off
Keeping warm	On Off*
Recommended temperatures	
Pyrolytic recommendation	On Off*
Cooling fan run-on	Temperature controlled* Time controlled

* Factory default setting

Menu option	Available settings
Safety	Sensor lock On | Off* System lock 🔒 On | Off*
Miele@home	Activate | Deactivate Connection status Set up again Reset Set up
Remote control	On* Off
RemoteUpdate	On* Off
Software version	
Showroom programme	Demo mode On | Off*
Factory default	Appliance settings User programmes Recommended temperatures

* Factory default setting

Opening the “Settings” menu

In the Further ⧉ | Settings menu, you can personalise your oven by adapting the factory default settings to suit your requirements.

- Select Further ⧉.
- Select Settings ⚑.
- Select the desired setting.

You can check settings or change them.

Settings cannot be changed while a cooking process is in progress.

Language ⚑

You can set your language and location.

After selecting and confirming your choice, the language you have selected will appear in the display.

Tip: If you have selected the wrong language by mistake, select the ⧉ sensor control. Follow the ⚑ symbol to get back to the Language ⚑ sub-menu.

Time

Show

Select how you want the time of day to show in the display when the oven is switched off:

- On
  The time always appears in the display. Changing this setting increases energy consumption.
  If you also select the Display | QuickTouch | On setting, all sensor controls respond to touch straight away.
  If you also select the Display | QuickTouch | Off setting, the oven has to be switched on before it can be used.
- Off
  To save energy, the display does not light up. The oven has to be switched on before it can be used.
- Night dimming
  The time only shows on the display between 5:00 a.m. and 11:00 p.m. The display remains dark at all other times. Changing this setting increases energy consumption.

Clock format

The time of day can be displayed in the 24 or 12-hour format (24 h or 12 h).

Set

Set the hours and the minutes.

If there is a power cut, the current time of day will reappear once power has been restored. The time of day is saved for approx. 150 hours.

If the oven has been connected to a WiFi network and signed into the Miele app, the time will be synchronised based on the location setting in the Miele app.

Date

Set the date.

Lighting

- On
  The oven interior lighting is switched on during the entire cooking period.
- “On” for 15 seconds
  The oven interior lighting switches off 15 seconds after a cooking programme has begun. Press the ☼ sensor control to switch the oven interior lighting on again for 15 seconds.

- Off
  The oven interior lighting is switched off. Press the ☼ sensor control to switch on the oven interior lighting for 15 seconds.

Display

Brightness

The display brightness is represented by a bar with seven segments.

- ■■■■■■■
  Maximum brightness
- ■▫▫▫▫▫▫
  Minimum brightness

QuickTouch

Select how the sensor controls should respond when the oven is switched off:

- On
  If you have also selected the Time | Show | On or Night dimming setting, the sensor controls will also respond when the oven is switched off. Changing this setting increases energy consumption.
- Off
  Independently of the Time | Show setting, the sensor controls only respond when the oven is switched on, as well as for a certain amount of time after switching it off.

Volume

Buzzer tones

If buzzers are switched on, a buzzer will sound when the set temperature is reached and at the end of a set time.

If you want to open the door remotely using a voice-based service, make sure that nobody is in the area around the door when opening it.

Melodies

At the end of a process, a melody will sound several times in intervals.

The volume of the melody is represented by a bar with seven segments.

- ■■■■■■■
  Maximum volume
- ▫▫▫▫▫▫▫
  Melody is switched off

Solo tone

At the end of a process, a continuous tone will sound for a period of time.

The pitch of this continuous tone is represented by a segment bar.

- ■■■■■■■■■■■■■■
  Maximum pitch
- ▫▫▫▫▫▫▫▫▫▫▫▫▫▫
  Minimum pitch

Keypad tone

The volume of the tone that sounds each time you touch a sensor control is represented by a bar with seven segments.

- ■■■■■■■
  Maximum volume
- ▫▫▫▫▫▫▫
  Tone is switched off

Welcome melody

The melody that sounds when you touch the ⏻ On/Off sensor control can be switched on or off.

Units

Temperature

You can set the temperature in degrees Celsius (°C) or degrees Fahrenheit (°F).

Booster

The Booster function is used to quickly pre-heat the oven compartment.

- On
  The Booster function is automatically switched on during the heating-up phase of a cooking programme. The top heat/grill element, ring heating element and hot air fan pre-heat the oven compartment to the set temperature at the same time.
- Off
  The Booster function is switched off during the heating-up phase of a cooking programme. Only the heating elements for the selected oven function are used to pre-heat the oven compartment.

Rapid cooling phase

The Rapid cooling phase function allows you to cool the food and the oven compartment down rapidly at the end of a cooking programme.

You might find this function useful if, for example, you intend to start an automatic programme straight away and this new programme needs the oven compartment to be cold.

By using this function in combination with the Keeping warm function, you can keep food warm at the end of a cooking programme without accidentally overcooking it.

- On
  The Rapid cooling phase function is switched on. At the end of the cooking process, the door automatically opens a little. The cooling fan rapidly cools down the food and oven compartment.
- Off
  The Rapid cooling phase function is switched off. At the end of the cooking process, the door remains closed. The cooling fan cools down the food and oven compartment.

Keeping warm

The Keeping warm function allows you to keep food warm at the end of a cooking programme without accidentally overcooking it. The food is kept warm at a preset temperature (Settings | Recommended temperatures | Keeping warm).

You can only use the Keeping warm function in combination with the Rapid cooling phase function.

- On
  The Keeping warm function is switched on. At the end of the cooking process, the door automatically opens a little. The cooling fan rapidly cools the food and oven compartment down to the preset temperature.
  As soon as the temperature has been reached, the door closes again automatically to keep the food warm.
- Off
  The Keeping warm function is switched off. At the end of the cooking process, the door remains closed. The cooling fan cools down the food and oven compartment.

Recommended temperatures

If you often cook with different temperatures, it makes sense to change the recommended temperatures.

After selecting this menu option, a list of operating modes will appear in the display.

■ Select the relevant operating mode.

The recommended temperatures are displayed along with the available temperature range.

- Change the recommended temperatures.
- Confirm with *OK*.

You can also change the recommended temperature for the Keeping warm function.

Pyrolytic recommendation

You can set whether you want a reminder to run the pyrolytic cleaning programme to come on (On) or not (Off).

Cooling fan run-on

The cooling fan will continue to run for a while after the oven has been switched off to prevent any humidity building up in the oven compartment, on the fascia panel or on the oven housing unit.

- Temperature controlled
  The cooling fan switches off when the temperature in the oven drops below 70 °C.
- Time controlled
  The cooling fan switches off after a period of about 25 minutes.

Condensate can damage the oven housing unit and the worktop and lead to corrosion in the oven.

If you have set the cooling fan to Time controlled and leave food in the oven compartment to keep warm, moisture levels in the oven will increase, leading to condensation forming on the fascia panel and surrounding kitchen furniture, and drops of moisture collecting under the worktop.

Do not leave food in the oven compartment to keep it warm if you have selected Time controlled.

Safety

Sensor lock

The sensor lock prevents the cooking programme being switched off by mistake or settings being changed. Apart from the ⏻ On/Off sensor control, the activated sensor lock prevents the sensor controls and fields in the display from working a few seconds after a programme has been started.

- On
  The sensor lock is activated. Touch the *OK* sensor control for at least 6 seconds to deactivate the sensor lock for a short period of time.
- Off
  The sensor lock is deactivated. All sensor controls react to touch as normal.

System lock 🔒

The system lock prevents the oven being switched on by mistake.

The minute minder and the MobileStart function can still be used when the system lock is active.

The system lock will remain activated even after a power failure.

- On
  The system lock has been activated. Before you can use the oven, touch the *OK* sensor control for at least 6 seconds.
- Off
  The system lock is deactivated. You can use the oven as normal.

Miele@home

The oven is a Miele@home-compatible appliance. Your oven is fitted ex-works with a WiFi communication module and is suitable for wireless communication.

There are a number of ways of connecting your oven to your WiFi network. We recommend connecting your oven to your WiFi network with the help of the Miele app or via WPS.

- Activate
  This setting is only visible if Miele@home is deactivated. The WiFi function is reactivated.
- Deactivate
  This setting is only visible if Miele@home is activated. Miele@home remains set up, the WiFi function is switched off.
- Connection status
  This setting is only visible if Miele@home is activated. The display shows information such as the WiFi reception quality, network name and IP address.
- Set up again
  This setting is only visible if a WiFi network has already been set up. Reset the network settings and immediately set up a new network connection.
- Reset
  This setting is only visible if a WiFi network has already been set up. The WiFi function is deactivated and the WiFi network connection will be reset to the factory default. You must set up a new WiFi network connection to be able to use Miele@home.
  The network settings should be reset whenever an oven is being disposed of or sold, or if a used oven is being put into operation. This is the only way to ensure that all personal data has been removed and the previous owner will no longer be able to access the oven.
- Set up
  This setting is only visible if no WiFi network connection has been set up yet. You must set up a new WiFi network connection to be able to use Miele@home.

Performing Scan & Connect

Initial commissioning has been carried out without Miele@home having been set up.

■ Scan the QR code.

If you have installed the Miele app and have a user account, you will be taken directly to the networking steps.

If you have not yet installed the Miele app, you will be taken to the Apple App Store® or the Google Play Store™.

■ Install the Miele app and set up a user account.

■ Scan the QR code again.

The Miele app will guide you through the setup process.

Remote control

If you have installed the Miele app on your mobile device, have access to the Miele@home system and have activated the remote control function (On), you can use the MobileStart function to retrieve information on oven cooking programmes that are in progress or to end a programme in progress.

Activating MobileStart

- Select the sensor control to activate MobileStart.

The sensor control lights up. You can operate your oven remotely with the Miele app.

Directly operating the oven takes priority over operating it via the remote control function on the app.

You can use MobileStart as long as the sensor control is lit up.

RemoteUpdate

The RemoteUpdate menu option is only displayed and can only be selected if the requirements for using Miele@home have been met (see “Before using for the first time – Miele@home”).

The RemoteUpdate function is used for updating the software in your oven. If an update is available for your oven, it will automatically download it. Updates will not be installed automatically. They must be initiated manually.

If you do not install an update, you can continue to use your oven as usual. However, Miele recommends installing updates.

Activating/deactivating

The RemoteUpdate function is activated as standard. Available updates will be downloaded automatically but will only be installed if you initiate installation manually.

Deactivate RemoteUpdate if you do not want any updates to be downloaded automatically.

Running a RemoteUpdate

Information about the content and scope of an update will be provided in the Miele app.

A message will appear in your oven display if a software update is available.

You can install the update immediately or postpone this until later. When the oven is switched on again, you will be reminded about the update.

Deactivate RemoteUpdate if you do not want to install the update.

The update may take several minutes.

Please note the following information about the RemoteUpdate function:

- You will only receive a message when an update is available.
- Once an update has been installed, it cannot be undone.
- Do not switch the oven off during the update. Otherwise, the update will be aborted and will not be installed.
- Some software updates can only be carried out by your Miele dealer.

Software version

The software version is intended for your Miele dealer. You do not need this information for domestic use.

Showroom programme

This function enables the oven to be demonstrated in showrooms without heating up. This setting is not needed for domestic use.

Demo mode

If you have demo mode activated, Demo mode is activated. The appliance will not heat up will appear when you switch the oven on.

- On
  Touch the *OK* sensor control for at least 4 seconds to activate demo mode.
- Off
  Touch the *OK* sensor control for at least 4 seconds to deactivate demo mode. You can use the oven as normal.

Factory default

- Appliance settings
  Any settings that have been altered will be reset to the factory default settings.
- User programmes
  All User programmes will be deleted.
- Recommended temperatures
  Any recommended temperatures that have been changed will be reset to the factory default settings.

Operating hours

Select Further | Operating hours to query the total number of operating hours of your oven.

Using the Minute minder function

The 🔔 minute minder can be used to time other activities in the kitchen, e.g. boiling eggs.

The minute minder can also be used at the same time as a cooking programme for which the cooking duration start and finish times have been set (e.g. as a reminder to stir the food or add seasoning, etc.).

- The maximum minute minder time that can be set is 59 minutes and 59 seconds.

Tip: When using a function that uses moisture, use the timer to remind you to inject steam manually at the desired time.

Setting the minute minder

If you have selected the Display | QuickTouch | Off setting, you will need to switch the oven on before setting the minute minder. The minute minder can then be seen counting down in the display when the oven is switched off.

Example: you want to boil some eggs and set a minute minder duration of 6 minutes and 20 seconds.

- Select the ⏲ sensor control.
- Select Minute minder if a cooking programme is in progress at the same time.

The prompt Set 00:00 min appears.

- Using the navigation area, set 06:20.
- Confirm with *OK*.

The minute minder duration is now saved.

When the oven is switched off, the minute minder time counts down in the display and 🔔 appears instead of the time of day.

If you are cooking at the same time, 🔔 and the minute minder time will appear in the footer.

If you are in a menu, the minute minder counts down in the background.

At the end of the minute minder time, 🔔 will flash, the time will start counting up and a tone will sound.

- Select the ⏲ sensor control.
- If required, confirm with *OK*.

The buzzer will stop and the symbols in the display will go out.

Changing the minute minder duration

- Select the ⏲ sensor control.
- Select Minute minder if a cooking programme is in progress at the same time.
- Select Change.
- Confirm with *OK*.

The minute minder duration selected appears.

- Change the duration set for the minute minder.
- Confirm with *OK*.

The altered minute minder duration is now saved.

Deleting the minute minder duration

- Select the ⏲ sensor control.
- Select Minute minder if a cooking programme is in progress at the same time.
- Select Delete.
- Confirm with *OK*.

The minute minder duration is now deleted.

Menu	Recommended value	Range
Oven functions		
Fan plus	160 °C	30 – 250 °C
Conventional heat	180 °C	30 – 280 °C
Auto roast	160 °C	100 – 230 °C
Intensive bake	170 °C	50 – 250 °C
Full grill	240 °C	200 – 300 °C
Fan grill	200 °C	100 – 260 °C
Moisture plus		
Moisture plus + Auto roast	160 °C	130 – 230 °C
Moisture plus + Fan plus	160 °C	130 – 250 °C
Moisture plus + Intensive bake	170 °C	130 – 250 °C
Moisture plus + Conv. heat	180 °C	130 – 280 °C
Pyrolytic		
Automatic programmes Auto		

Menu	Recommended value	Range
Further		
Bottom heat	190 °C	100 – 280 °C
Eco Fan heat	190 °C	100 – 250 °C
Defrost	25 °C	25 – 50 °C
Drying	60 °C	30 – 70 °C
Heat crockery	80 °C	50 – 100 °C
Prove dough		
Prove for 15 minutes	–	–
Prove for 30 minutes	–	–
Prove for 45 minutes	–	–
Keeping warm	75 °C	60 – 90 °C
Descale		
Settings		
Operating hours		

Cooking programmes

- If possible, use the automatic programmes for cooking food.
- Remove all accessories from the oven compartment that are not required for cooking.
- In general, if a range of temperatures is given in a recipe or chart, it is best to select the lower temperature and to check the food after the shortest duration.
- Preheat the oven compartment only if instructed to do so in the recipe or the cooking chart.
- If possible, do not open the door during a programme.
- Use dark, matt bakeware and cooking containers made of non-reflective materials (enamelled steel, heat-resistant glass, coated aluminium). Shiny materials such as stainless steel or aluminium reflect the heat and therefore can give a more uneven food heating result. Do not cover the oven floor or the rack with heat-reflecting aluminium foil.
- Monitor cooking durations to avoid wasting energy when cooking.
  Set the cooking duration, or use a food probe if you have one.
- The Fan plus function can be used for cooking many types of food. Because the fan distributes the heat in the oven compartment straight away, it allows you to use a lower temperature than you would with Conventional heat. It also enables you to cook on multiple shelf levels at the same time.
- Eco Fan heat is an innovative function which is suitable for smaller foodstuffs, e.g. frozen pizzas, part-baked rolls, biscuits and for meat dishes and roasts. Energy-efficient cooking thanks to optimal utilisation of heat. When cooking on a single shelf, up to 30 % less energy is used with comparatively good cooking results. Do not open the door during the cooking programme.
- Fan grill is the best function for grilled dishes. With this function you can use lower temperatures than in other grill functions which use the maximum temperature setting.
- Whenever possible you should cook multiple foods at the same time. Place them next to each other in the oven or on different shelf levels.
- Foods which you are unable to cook at the same time should, if possible, be cooked one after the other in order to make use of existing heat in the oven.

Residual heat utilisation

- In cooking programmes using temperatures greater than 140 °C and with cooking durations longer than 30 minutes, the temperature can be turned down to the lowest possible level about 5 minutes before the end of the cooking programme. The residual heat in the oven is sufficient for cooking the food until it is done. However, never switch the oven off (see “Warning and safety instructions”).
- If you have set a cooking duration for a cooking programme, the oven heating elements will switch off automatically shortly before the end of cooking. The residual heat in the oven is sufficient to complete the cooking process.
- It is best to start the pyrolytic cleaning programme immediately after a cooking programme. The residual heat in the oven will help reduce the amount of energy required.

Customising settings

■ Select Display | QuickTouch | Off for the control elements to reduce energy consumption.

■ For the oven interior lighting, select Lighting | Off or “On” for 15 seconds. The oven interior lighting can be switched on again at any time by touching the ☼ sensor control.

Energy-saving mode

The oven will switch itself off automatically to save energy if a programme is not being run and controls have not been operated. The time of day will appear in the display or the display will remain dark (see “Settings”).

- Switch the oven on.

The main menu will appear.

- Place the food in the oven compartment.
- Select the operating mode you want to use.

The operating mode and the recommended temperature will appear.

- Change the recommended temperature if necessary.

The recommended temperature will be accepted within a few seconds. You can change the temperature subsequently via the arrow buttons.

- Confirm with *OK*.

The required and the actual temperature will appear and the heating-up phase will begin.

You will see the temperature increasing. A buzzer will sound when the set temperature is reached for the first time.

- After cooking, select the sensor control for the selected operating mode to end the cooking process.
- Take the food out of the oven compartment.
- Switch the oven off.

Changing values and settings for a cooking programme

Depending on the function, as soon as a cooking programme is in progress, you can use the ⮌ sensor control to change the values or settings for this programme.

- Select the ⮌ sensor control.

Depending on the function, the following settings appear:

- Temperature
- Core temperature
- Duration
- Finish at
- Start at
- Booster
- Pre-heat
- Rapid cooling phase
- Keeping warm
- Crisp function

Changing values and settings

- Select the desired value or setting and confirm with *OK*.
- Change the value or setting and confirm with *OK*.

The cooking programme will restart with the new values and settings.

Changing the temperature and core temperature

You can permanently reset the recommended temperature to suit your cooking preferences by selecting Further ⧉ | Settings ⚑ | Recommended temperatures.

The core temperature only appears if you are using the food probe (see “Roasting – Food probe”).

- Select the ⮌ sensor control.
- Change the temperature and the core temperature if necessary.

Tip: You can change the temperature directly via the navigation area.

- Confirm with *OK*.

The cooking programme will resume with the new desired temperatures.

Setting cooking durations

Cooking results can be impaired if there is a long delay between the food being placed in the oven and the start of cooking. Fresh food can change colour and even deteriorate. When baking, the cake mixture or dough can dry out, and the raising agents can lose their effectiveness. Select as short as possible a time until the cooking programme starts.

You have placed the food in the oven compartment, selected an operating mode and the required settings such as the temperature.

By entering Duration, Finish at or Start at via the ◷ sensor control, you can automatically switch the cooking process off or on and off.

- Duration
  Enter the required cooking duration for the food. The heating will switch off automatically once this duration has elapsed. The maximum cooking duration that can be set depends on the operating mode that you have selected.
- Finish at
  Specify when you want the cooking process to end. The oven heating will switch off automatically at the time you have set.
- Start at
  This function will only appear in the menu if you have set a Duration or Finish at time. With Start at, you have to specify when you want the cooking process to start. The oven heating will switch on automatically at the time you have set.

■ Select the ◷ sensor control.

■ Set the desired times.

■ Confirm with *OK*.

■ Touch the ⮌ sensor control to return to the menu for the selected operating mode.

Changing the set cooking durations

■ Select the ◷ sensor control.

■ Select the desired time.

■ Confirm with *OK*.

■ Select Change.

■ Change the set time.

■ Confirm with *OK*.

■ Touch the ⮌ sensor control to return to the menu of the selected function.

These settings will be deleted in the event of a power failure.

Deleting the set cooking durations

■ Select the ◷ sensor control.

■ Select the desired time.

■ Confirm with *OK*.

■ Select Delete.

■ Confirm with *OK*.

■ Touch the ⮌ sensor control to return to the menu of the selected function.

If you delete Duration, the set times for Finish at and Start at are also deleted.

If you delete Finish at or Start at, the cooking programme will start using the cooking duration set.

Cancelling a cooking programme

You can cancel a cooking programme using the function sensor control that lights up orange or using the ⮌ sensor control.

The oven compartment heating and lighting will then switch off. Any cooking durations set will be deleted.

Touch the function sensor control to return to the main menu.

If the Rapid cooling phase function is switched on, the door automatically opens a little at the end of the cooking process and the cooling fan rapidly cools down the food and oven compartment.

Touch the sensor control for the selected function to return to the main menu.

Cancelling a cooking programme without a set cooking duration

- Touch the sensor control for the selected function.

The main menu will appear.

- **Or:** select the ⮌ sensor control.
- Select Cancel process.
- Confirm with *OK*.

Cancelling a cooking programme with a set cooking duration

- Touch the sensor control for the selected function.

Cancel process? appears in the display.

- Select Yes.
- Confirm with *OK*.
- **Or:** select the ⮌ sensor control.
- Select Cancel process.
- Confirm with *OK*.
- Select Yes.
- Confirm with *OK*.

Pre-heating the oven compartment

The Booster is used in conjunction with certain functions to quickly pre-heat the oven compartment.

The Pre-heat can be used with any function and has to be switched on separately for each cooking programme. If you have set a cooking duration, it will only start to count down after the heating-up phase.

It is only necessary to pre-heat the oven compartment in a few instances.

- Most dishes can be placed in the cold oven compartment to make use of the heat produced during the heating-up phase.
- Pre-heat the oven compartment when cooking the following food with the following functions:

- Dark bread dough as well as beef sirloin joints and fillet with the Fan plus, Moisture plus and Conventional heat functions
- Cakes and pastries with a short cooking duration (approx. 30 minutes or less) as well as delicate items (e.g. sponge) with the Conventional heat function (without the Booster function)

Booster

The Booster function is used to quickly pre-heat the oven compartment.

This function is switched on as the factory default setting for the following functions (Further | Settings | Booster | On):

- Fan plus
- Conventional heat
- Auto roast
- Moisture plus

If you set a temperature above 100 °C and the Booster function is switched on, a rapid heating-up phase heats the oven to the set temperature. The top heat/ grill element and the ring heater element come on together with the fan.

Delicate items (e.g. sponge or biscuits) will brown too quickly on the top if the Booster function is used.

Switch off the Booster function for these items.

Switching the Booster on and off for a cooking programme

If you have selected the Booster | On setting, you can switch off the function separately for a cooking programme.

On the other hand, you can also switch on the function separately for a cooking programme if you have selected the Booster | Off setting.

Example: you have selected a function and the required settings such as the temperature.
You want to switch off the Booster function for this cooking programme.

- Select the ⮌ sensor control.
- Select Booster | Off.
- Confirm with *OK*.

The Booster function is switched off during the heating-up phase. Only the heating elements associated with the function are pre-heating the oven compartment.

Pre-heat

It is only necessary to pre-heat the oven in a few instances.

You can place most dishes in the cold oven compartment to make use of the heat produced during the heating-up phase.

If you have set a cooking duration, it will only start to count down when the desired temperature is reached and you have placed the food in the oven.

Start the cooking process immediately without delaying the start time.

Switching on Pre-heat

The Pre-heat function can be used with any operating mode and has to be switched on separately for each cooking programme.

Example: you have selected a function and the required settings such as the temperature.
You want to switch on the Pre-heat function for this cooking programme.

- Select the ⮌ sensor control.
- Select Pre-heat | On.
- Confirm with *OK*.

The following message is displayed with a time: Place food in the oven at . The oven compartment is heated to the set temperature.

- As soon as you are prompted to do so, place the food in the oven compartment.
- Confirm with *OK*.

Rapid cooling phase

The Rapid cooling phase function allows you to cool the food and the oven compartment down rapidly at the end of a cooking programme.

Switching the Rapid cooling phase function on and off for a cooking programme

If you have selected the Rapid cooling phase | On setting, you can switch this function off individually for a particular cooking programme.

Conversely, you can switch the function on individually for a particular cooking programme if you have selected the Rapid cooling phase | Off setting.

Example: you have selected a function and the required settings such as the temperature.
You want to switch off the Rapid cooling phase function for this cooking programme.

- Select the ⮌ sensor control.
- Select Rapid cooling phase | Off.
- Confirm with *OK*.

If the Keeping warm function is switched on as well, the following message will appear: When "Rapid cooling" is deactivated, "Keeping warm" is also switched off..

- If necessary, confirm this message with *OK*.

The Rapid cooling phase and Keeping warm functions are switched off. At the end of the cooking process, the door remains closed. The cooling fan cools down the food and oven compartment.

Keeping warm

The Keeping warm function allows you to keep food warm at the end of a cooking programme without accidentally overcooking it.

The food is kept warm at a preset temperature (see "Settings – Recommended temperatures").

You can only use the Keeping warm function in combination with the Rapid cooling phase function.

If you have selected the Keeping warm | On setting, you can switch this function off individually for a particular cooking programme.

Conversely, you can switch the function on individually for a particular cooking programme if you have selected the Keeping warm | Off setting.

Switching the Keeping warm function on for a cooking programme

Example: you have selected a function and the required settings such as the temperature.
You want to switch on the Keeping warm function for this cooking programme.

- Select the ⮌ sensor control.
- Select Keeping warm | On.
- Confirm with *OK*.

If the Rapid cooling phase function is switched off as well, the following message will appear: "Keeping warm" requires the "Rapid cooling" function. "Rapid cooling" will also be activated..

- If necessary, confirm the message with *OK*.

The Keeping warm and Rapid cooling phase functions are switched on. At the end of the cooking process, the door

automatically opens a little. The cooling fan rapidly cools the food and oven compartment down to the preset temperature.
As soon as the temperature has been reached, the door closes again automatically to keep the food warm.

Switching the Keeping warm function off for a cooking programme

Example: you have selected a function and the required settings such as the temperature.
You want to switch off the Keeping warm function for this cooking programme.

- Select the ⮌ sensor control.
- Select Keeping warm | Off.
- Confirm with *OK*.

The Keeping warm function is switched off. At the end of the cooking process, the door remains closed. The cooling fan cools down the food and oven compartment.

The setting for the Rapid cooling phase function remains unchanged.

Crisp function

It is a good idea to use the Crisp function function (moisture reduction) when cooking food which has a moist topping e.g. quiche, pizza, tray bakes with fresh fruit toppings or muffins.

Poultry in particular gets a good crisp skin with this function.

Switching on Crisp function

The Crisp function function can be used with any operating mode and has to be switched on separately for each cooking programme.

You have selected a function and the required settings such as the temperature.
You want to switch on the Crisp function function for this cooking programme.

- Select the ⮌ sensor control.
- Select Crisp function | On.
- Confirm with *OK*.

The Crisp function function is switched on.

Your oven is equipped with a steam injection system for cooking with added moisture. Baking, roasting and cooking with the Moisture plus function guarantees optimum steam and air flow for even cooking and browning results.

You can combine cooking with moisture with various functions:

- Moisture plus + Auto roast
- Moisture plus + Fan plus
- Moisture plus + Intensive bake
- Moisture plus + Conv. heat

After selecting the function, set the temperature and the type and number of bursts of steam (Automatic burst of steam, Manual bursts of steam or Time-controlled bursts of steam).

Fresh tap water is taken into the steam injection system via the pipe on the left underneath the fascia panel.

Liquids other than water can cause damage to the oven.
Only use tap water when cooking with added moisture.

The water is injected as bursts of steam into the oven compartment during the cooking programme. The steam inlets are located in the rear left-hand corner of the oven roof.

Suitable food items

One burst of steam takes about 5–8 minutes. The number of bursts of steam and when they are performed will depend on the type of food being cooked:

- **Yeast doughs** will rise better if steam is released at the beginning of the programme.
- **Bread and bread rolls** rise better if steam is released at the start. Another burst of steam at the end of the programme will give the bread and rolls a glistening crust.
- When **roasting meat with a high fat content**, releasing steam at the beginning of roasting will help render the fat.

Additional moisture is not suitable for mixtures which already contain a lot of moisture, such as meringues. These need to dry out during baking.

Tip: Use the supplied recipes or the Miele app for reference.

Starting a cooking programme with Moisture plus

It is quite normal for condensation to form on the inside of the door during steam injection. This will dissipate during the course of the cooking programme.

- Prepare the food and place it inside the oven compartment.
- Select Moisture plus.
- Select the desired function with added moisture.
  The cooking programmes run identically with all heat sources.
- Confirm with *OK*.

The recommended temperature will appear.

Setting the temperature

- Change the recommended temperature if necessary.
- Confirm with *OK*.

The steam injection option will appear.

Selecting steam injection

- If you would like a burst of steam to be automatically injected into the oven after the heating-up phase, select Automatic burst of steam.
- If you would like to inject one or more bursts of steam manually at specific times, select 1 burst of steam, 2 bursts of steam or 3 bursts of steam.
- Confirm with *OK*.

If you have selected multiple bursts of steam, the steam injection option will appear.

- Select how you want steam injection to be performed.

- Manual bursts of steam
  You have to perform steam injection yourself.
- Time-controlled bursts of steam
  Set the steam injection times. The oven will then inject 1, 2 or 3 bursts of steam at the specified times.

- Confirm with *OK*.

If you are cooking food – e.g. bread or rolls – in a pre-heated oven, it is best to inject the steam manually and select the Pre-heat | On function. The first burst of steam should be injected as soon as you have placed the food in the oven.

If you have selected more than one burst of steam, the second burst cannot be injected until the oven compartment has reached a temperature of at least 130 °C.

If you want to use the Pre-heat function, remember to factor in the heating-up phase when performing manual and time-controlled steam injection (see “Operation” – “Pre-heat”).

- Set the steam injection times if necessary.
- Confirm with *OK*.

The prompt to draw in water then appears.

Preparing and starting the water intake process

- Fill a suitable container with the required amount of fresh tap water.
- Open the door.
- Pull the water intake pipe forwards (located on the left below the fascia panel).

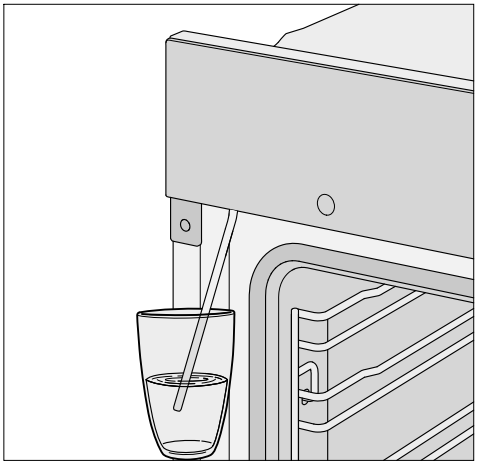

- Immerse the end of the water intake pipe in the container with the tap water.
- Confirm with *OK*.

The water intake process will begin.

The amount of water actually drawn up into the oven may be less than the amount specified as required, leaving a small amount in the container.

You can interrupt and resume the intake process at any time by selecting *OK*.

- At the end of the water intake process, remove the water container and close the door.

The sound of the pump running can be heard. Residual water in the water intake pipe is being drawn into the oven.

The oven heating and cooling fan will switch on. The required and actual temperatures will appear.

You will see the temperature increasing. A buzzer will sound when the set temperature is reached for the first time.

If you have selected Time-controlled bursts of steam, you can check the injection time in advance by touching ℹ Info.

Releasing bursts of steam

⚠ Danger of injury caused by steam.
Steam can cause severe scalding.
In addition, steam condensing on the control panel will cause the sensor controls and the touch display to react more slowly.
Do not open the door whilst steam is being released.

Automatic burst of steam

Once the heating-up phase has been completed, the automatic burst of steam is injected.

The water will vaporise in the oven compartment. ♨ and Burst of steam active appear in the display.

Following steam injection, ♨ and Burst of steam active disappear.

- Continue cooking until the end of the cooking duration.

Manual bursts of steam

The bursts of steam can be injected as soon as the ♨ sensor control lights up in the display.

Please wait until the heating-up phase is completed to allow the steam to be distributed evenly by the warm air in the oven.

Tip: For tips on when to inject the steam, please refer to the recipes in the cookbook supplied with the oven or to the Miele app. Use the Minute minder 🔔 function to remind you when to inject the steam.

- Select the ♨ sensor control.

The burst of steam is injected. ♨ and Burst of steam active will appear in the display and the ♨ sensor control will go out.

- Proceed as described to inject further bursts of steam as soon as the ♨ sensor control lights up.

After the last burst of steam is injected, the ♨ sensor control, the message and ♨ all disappear from the display.

- Continue cooking until the end of the cooking duration.

Time-controlled bursts of steam

The oven will inject steam at the set times.

♨ and Burst of steam active appear when the steam is being injected.

After the last burst of steam is injected, ♨ and Burst of steam active disappear.

- Continue cooking until the end of the cooking duration.

Evaporate residual moisture

When cooking using the addition of moisture, the water will be equally distributed between the bursts of steam and used up as long as the programme is not interrupted.

However, if a programme using the addition of moisture is manually interrupted before all the bursts of steam have been released or if there is a power cut, the water for these unused bursts of steam will remain in the steam injection system.

The next time Moisture plus or an automatic programme with moisture is used, Evaporate residual moisture will appear in the display with the options.

- It is best to start the evaporation of residual water straight away so that only fresh water is used during a food cooking programme.

⚠ Danger of injury caused by steam.
Steam can cause severe scalding.
Do not open the door whilst steam is being released.

Depending on the amount of water, evaporation of residual water can take up to 30 minutes.

The oven compartment is heated up and the remaining water is evaporated, causing condensation to form in the oven compartment and on the door.

- Be sure to wipe away the condensation from the door and oven compartment once the compartment has cooled down.

Starting residual water evaporation immediately

⚠ Danger of injury caused by steam.
Steam can cause severe scalding.
Do not open the door whilst steam is being released.

- Select a function or an automatic programme that uses moisture.

The prompt Evaporate res. moisture? will then appear.

- Select Yes.

Evaporate residual moisture and a time then appear in the display.

The residual water evaporation will then start. You can follow the time counting down in the display.

The time shown in the display will depend on the amount of residual water left in the steam injection system. During the evaporation process, the duration may be adjusted by the system according to the amount of water currently present.

At the end of the residual water evaporation process, a buzzer will sound and Finished will appear.

A cooking process using an operating mode or an automatic programme with moisture can now be run.

Whilst residual water is evaporating, moisture will condense on the door and in the oven compartment. This moisture needs to be removed after the oven compartment has cooled down.

Skipping residual water evaporation

Allowing further intake of water can, under extremely adverse circumstances, cause water to overflow from the steam injection system into the oven compartment.
It is therefore best not to cancel the evaporation process.

- Select a function or an automatic programme that uses moisture.

Evaporate res. moisture? appears.

- Select Skip.

A cooking programme using a function or an automatic programme with moisture assistance can now be run.

You will be prompted to carry out the evaporation of residual water the next time you select the function or an automatic programme that uses moisture assistance and when you switch the oven off.

The wide range of automatic programmes enables you to achieve excellent results with ease.

Categories

The Auto automatic programmes are sorted into categories to provide a better overview. Simply select the appropriate programme for the type of food you are cooking and follow the instructions in the display.

Using automatic programmes

■ Select Automatic programmes Auto.

A list will appear in the display.

■ Select the desired food category.

The automatic programmes available for the food category selected will then appear.

■ Select the desired automatic programme.

■ Follow the instructions in the display.

Some automatic programmes will prompt you to use the food probe. Read the information under “Roasting – Food probe”.

The core temperature cannot be changed for the automatic programmes.

Tip: Use ℹ Info to display information such as how to place or turn the food depending on the cooking programme.

Handy hints

- When using automatic programmes, the recipes provided are designed as a guide only. Other similar recipes, including those using different quantities, can be used for the automatic programme in question.
- After cooking, allow the oven compartment to cool down to room temperature again before starting an automatic programme.
- Some automatic programmes require a pre-heating phase before food is placed in the oven compartment. A prompt will appear in the display indicating when this needs to be done.
- Some automatic programmes require the addition of liquid after a certain cooking duration. You will be prompted by a message in the display when this needs to be done (e.g for adding liquid).
- The duration quoted for automatic programmes is an estimate. It may increase or decrease depending on the programme. The duration, in particular with meat, will vary depending on the initial temperature of the food.
- When using the food probe, the cooking duration will be determined by when the core temperature is reached.
- If by the end of an automatic programme the food is not cooked enough, select Cont. cooking or Continue baking. Conventional heating will then be used for 3 minutes to continue cooking or baking the food.

This section provides information on the following applications:

- Defrost
- Drying
- Heat crockery
- Prove dough
- Keeping warm
- Low temperature cooking
- Frozen food/ready meals

Defrost

Gentle defrosting of frozen goods means that the vitamins and minerals are generally retained.

- Select Further ⧉.
- Select Defrost.
- Alter the recommended temperature if necessary and then set the duration.

Air is circulated throughout the oven compartment to gently defrost the frozen goods.

⚠ Risk of infection from bacteria.

Bacteria such as salmonella can cause life-threatening food poisoning.

It is particularly important to observe food hygiene rules when defrosting fish and meat, and in particular when defrosting poultry.

Do not use the liquid produced during defrosting.

Process the food as required as soon as it has been defrosted.

Tips

- Remove the packaging and place the frozen goods on the universal tray or in a suitable bowl or dish.
- Use the universal tray with the rack placed on top of it for defrosting poultry. This way the frozen goods will not be lying in the defrosted liquid.
- Meat, poultry or fish does not need to be fully defrosted before cooking. Defrost until the food has started to thaw. The surface will then be sufficiently thawed to take herbs and seasoning.

Drying

Dehydrating or drying is a traditional method of preserving fruit, certain vegetables and herbs.

It is important that fruit and vegetables are ripe and not bruised before they are dried.

- Peel and core the food for drying, if necessary, and cut it up.
- Depending on how big it is, distribute the food for drying evenly in a single layer (if possible) over the baking and roasting rack or the universal tray.

Tip: You can also use the perforated Gourmet baking and AirFry tray, if you have one.

- Dry on a maximum of 2 levels at the same time.
  Place the food for drying on shelf levels 1+3.
  If using the baking and roasting rack and universal tray, place the universal tray below the rack.
- Select Further ⧉.
- Select Drying.
- Change the recommended temperature if necessary and then set the drying time.
- Follow the instructions on the display.
- Turn the food for drying on the universal tray at regular intervals.

The drying times are longer for whole or halved food items.

Food for drying		[°C]	[h]
Fruit		60–70	2–8
Vegetables		55–65	4–12
Mushrooms		45–50	5–10
Herbs*		30–35	4–8

Special application/Operating mode,
Temperature, Drying time,
Special application Drying,
Operating mode Conventional heat

* When drying herbs, always use the universal tray on shelf level 2 and use the Conventional heat operating mode, as the fan is switched on in the Drying special application.

- Reduce the temperature if condensation begins to form in the oven compartment.

Removing the dried food

⚠ Risk of injury caused by hot surfaces.
The oven gets hot during operation. You could burn yourself on the heating elements, oven compartment or accessories.
Use oven gloves when removing dried food from the oven.

- Allow the dried fruit or vegetables to cool down after drying.

Dried fruit needs to be completely dry, but also soft and elastic. Juice should not escape when cut.

- Store dried food in sealed glass jars or tins.

Heat crockery

When the crockery is pre-heated, the food does not cool down as quickly.

Use heat-resistant crockery.

- Place the rack on shelf level 2 and place the crockery to be warmed on top. Depending on the size of the dishes, you can also place the crockery on the oven compartment floor and take the side runners out to make more room.
- Select Further .
- Select Heat crockery.
- Alter the recommended temperature if necessary and then set the time.
- Follow the instructions in the display.

⚠ Risk of injury caused by hot surfaces.
The oven gets hot during operation. You could burn yourself on the heating elements, oven compartment or accessories. Droplets of water may have accumulated underneath the crockery.
Use oven gloves when removing the crockery from the oven.

Prove dough

This programme is designed specifically for proving yeast dough.

- Select Further .
- Select Prove dough.
- Select the proving time.
- Follow the instructions in the display.

Keeping warm

You can keep food warm in the oven compartment for several hours.

In order to maintain the quality of food, select the shortest possible time.

- Select Further ⧉.
- Select Keeping warm.
- Place the food to be kept warm in the oven compartment and confirm with *OK*.
- Alter the recommended temperature if necessary and then set the time.
- Follow the instructions in the display.

Low temperature cooking

Low temperature cooking is ideal for cooking delicate cuts of beef, veal or lamb when a tender result is desired.

First sear the meat all over at a high temperature on the hob in order to seal it.

Then place the meat in the pre-heated oven compartment where the low temperature and long cooking duration will cook it to perfection and ensure it is very tender.

The meat will relax. The juices inside will start to circulate evenly throughout the meat to reach the outer layers.
This gives very tender and succulent results.

- Only use lean meat which has been correctly hung and trimmed. Bones must be removed before cooking.
- For searing, use a suitable cooking oil or fat that can withstand high temperatures (e.g. clarified butter, vegetable oil).
- Do not cover meat during the cooking process.

The cooking duration takes approx. 2–4 hours depending on the weight and size of the meat and how well you want it cooked.

- As soon as the cooking process is done, you can carve the meat straight from the oven. It does not need to rest.
- The meat can be left in the oven compartment to keep warm until you serve it. This will not affect results in any way.
- Serve on pre-heated plates with very hot sauce or gravy to prevent it cooling down too quickly. The meat is at the ideal temperature for eating straight away.

If using the food probe, please observe the information under “Roasting – Food probe”.

Using Conventional heat

Take a look at the information in the cooking charts at the end of this booklet.

Use the universal tray with the rack placed on top of it.

- Place the rack together with the universal tray on shelf level 2.
- Select the Conventional heat function and a temperature of 120 °C.
- Pre-heat the oven together with the universal tray and rack for approx. 15 minutes.
- Whilst the oven compartment is pre-heating, sear the meat thoroughly on all sides on the hob.

⚠ Danger of burning due to hot surfaces.
The oven gets hot during operation. You could burn yourself on the heating elements, oven compartment or accessories.
Use oven gloves when placing food in the oven or removing it and when working in the hot oven compartment.

- Place the seared meat on the rack.
- Reduce the temperature to 100 °C (see “Cooking charts”).
- Continue cooking until the end of the cooking duration.

Frozen food/Ready meals

Tips for cakes, pizza and baguettes

- Bake cakes, pizza and baguettes on baking paper on the rack.
  Do not use the baking tray or the universal tray for frozen foods with a large surface area. The tray could become warped and difficult, or even impossible, to remove from the oven compartment when hot. Additional use will make the warping worse.
- Use the lowest temperature recommended on the packaging.

Tips for French fries, croquettes and similar items

- These frozen items can be cooked on the baking tray or universal tray.
- Use the lowest temperature recommended on the packaging.
- Turn food several times during cooking.

Preparing frozen food/ready meals

Handling food carefully will help protect your health.
Cakes, pizzas and french fries should be cooked until golden, not dark brown.

- Select the function and temperature recommended on the packaging.
- Pre-heat the oven compartment.
- Place the food in the pre-heated oven compartment on the shelf level recommended on the packaging.
- Check the food at the end of the shortest cooking duration recommended on the packaging.

User programmes

You can create and save up to 20 User programmes.

- You can combine up to 9 cooking stages to accurately programme your favourite or most frequently used recipes. In each cooking stage, you can select settings such as the function, temperature and cooking duration or core temperature.
- You can specify the shelf level(s) for the food.
- You can enter the name of the programme for your recipe.

When you call up and start your programme again, it will run automatically.

There are different ways of creating a User programme:

- At the end of an automatic programme, save it as a User programme.
- Save a cooking programme after running it with a set cooking duration.

Then enter a programme name.

Creating User programmes

■ Select Further ⧉.

■ Select User programmes.

■ Select Create programme.

You can now specify the settings for the first cooking stage.

Follow the instructions in the display:

■ Select and confirm the desired settings.

If you select the Pre-heat function, first complete the first cooking stage. Use Add cooking stage to then add another cooking stage where you set a cooking duration. Only then can you save or start the programme.

■ Select Finish cooking stage.

The settings for the first cooking stage have now been set.

You can add more cooking stages, for example, if you want to add another cooking function to follow on from the first.

■ If additional cooking stages are required, select Add cooking stage and proceed as for the first cooking stage.

■ When you have finished setting all the cooking stages, select Set the shelf level.

■ Select the desired level(s).

■ Confirm with *OK*.

If you want to check the settings or to change them at a later date, select the cooking stage in question.

■ Select Save.

■ Enter the programme name.

■ Select ✓.

A message will appear in the display confirming that the programme name has been saved.

■ Confirm with *OK*.

You can start the saved programme immediately, delay the start or change the cooking stages.

Starting User programmes

- Place the food in the oven compartment.
- Select Further ⧉.
- Select User programmes.
- Select the desired programme.
- Select Allow.

Depending on the programme settings, the following menu options appear in the display:

- Start now
  The programme will start immediately. The oven heating will switch on immediately.
- Finish at
  Specify the time when you want the programme to stop. The oven heating will switch off automatically at the time you have set.
- Start at
  Specify the time when you want the programme to start. The oven heating will switch on automatically at the time you have set.
- Show cooking stages
  A summary of your settings will appear in the display.
- Display actions
  The required actions, e.g. placing the food in the oven, will appear in the display.

- Select the desired menu option.
- Confirm the message regarding which shelf level to place the food with *OK*.

The programme selected will begin straight away or at the time set.

Use ℹ Info to display information such as how to place or turn the food depending on the cooking programme.

During the cooking programme, use ⮌ to switch the Rapid cooling phase and Keeping warm functions on or off.

- At the end of the programme, select the ⧉ sensor control.

Changing cooking stages

Cooking stages in automatic programmes that have been saved under a different name cannot be changed.

- Select Further ⧉.
- Select User programmes.
- Select the programme you want to change.
- Select Change programme.
- Select the cooking stage that you want to change or Add cooking stage to add another cooking stage.
- Select and confirm the desired settings.
- If you want to start the modified programme without changing it, select Start programme.
- Select Save when you have changed all the settings.

A message will appear in the display confirming that the programme name has been saved.

- Confirm with *OK*.

The saved programme has been changed and you can start it immediately or delay the start.

Changing the name

- Select Further ⧉.
- Select User programmes.
- Select the programme you want to change.
- Select Change name.
- Change the programme name.
- Select ✓.
- Once you have changed the programme name, select Save.

A message will appear in the display confirming that the programme name has been saved.

- Confirm with *OK*.

The programme has now been renamed.

Deleting User programmes

- Select Further ⧉.
- Select User programmes.
- Select the programme you want to delete.
- Select Delete programme.

The programme will be deleted.

Go to Further ⧉ | Settings ⚑ | Factory default | User programmes to delete all User programmes at the same time.

Handling food carefully will help protect your health.
Cakes, pizzas and french fries should be cooked until golden, not dark brown.

Tips on baking

- Set a cooking duration. If used for baking, do not delay the start for too long. Cake mixture or dough will dry out, and the raising agents will lose their effectiveness.
- Generally speaking, you can use racks, baking trays, universal trays and any type of baking tray made of heat-resistant material.
- Avoid using bright, thin-walled tins as they give an uneven or poor browning result. Under adverse circumstances, the food will not cook properly.
- Position rectangular tins with the longer side across the width of the oven compartment for optimum heat distribution and even baking results.
- Always place bakeware on the rack.
- Bake cakes with fruit toppings or deep cakes on the universal tray.

Using baking parchment

Miele accessories, e.g. the universal tray, are treated with PerfectClean enamel (see “Features”). Surfaces treated with PerfectClean enamel generally do not need to be greased or covered with baking parchment.

- Use baking parchment when baking lye mixtures because the sodium hydroxide used can damage the surface treated with PerfectClean.
- Use baking parchment when baking sponge, meringue, macaroons or similar items. Due to their high egg white content, these are more likely to stick.
- Use baking paper when cooking frozen food on the rack.

Notes on the cooking charts

You can find the cooking charts at the end of this book.

Selecting the temperature

- As a general rule, select the lower temperature given in the chart. Baking at temperatures higher than those recommended may reduce the cooking duration, but will lead to uneven browning of the food, and unsatisfactory cooking results.

Selecting the cooking duration

Unless otherwise stated, the cooking durations given in the cooking charts are for an oven compartment which has not been pre-heated. With a pre-heated oven compartment, shorten times by around 10 minutes.

- As a general rule, check the food after the shortest duration. Stick a wooden skewer into the food.

If it comes out clean without any batter/dough on it, the food is done.

Notes on the functions

You can find an overview of all the functions with their recommended values in “Main and sub-menus”.

Using Automatic programmes Auto

- Follow the instructions in the display.

Using Fan plus

Because the fan distributes the heat around the oven compartment straight away, it allows you to use a lower temperature than you would with the Conventional heat function.

Use this function if you are baking on multiple shelves at the same time.

- 1 shelf: place the food in shelf level 2.
- 2 shelves: place the food on shelf levels 1+3 or 2+4.
- 3 shelves: place the food on shelf levels 1+3+5.

Tips

- If you are cooking on multiple shelves at the same time, slide the universal tray in on the lowest level.
- For moist biscuits and cakes, bake on a maximum of 2 shelf levels at once.

Using Moisture plus

Use this function with your preferred type of heating for cooking with moisture assistance.

- Place the food in shelf level 2.

Using Intensive bake

Use this function for baking cakes with moist toppings.

Do **not** use this function for baking thin biscuits.

- Place cakes on shelf level 1 or 2.

Using Conventional heat

Dark metal, enamel, or aluminium bakeware with a matt finish, as well as heat-resistant glass, ceramic, and coated bakeware can be used.

Use this function for baking traditional recipes. If using an older recipe or cookbook, set the oven temperature 10 °C lower than the recommended one. This will not change the cooking duration.

- Place the food in shelf level 1 or 2.

Using Eco Fan heat

Use this function for cooking small amounts of food, e.g. frozen pizzas, part-baked rolls or biscuits, while saving energy.

- Place the food in shelf level 2.

Tips for roasting

- You can use all crockery made from temperature-resistant materials, e.g. roasting dishes, roasting pans with lid, ovenproof glass dishes, roasting bags, dishes made from earthenware or cast iron, the universal tray, rack and/or anti-splash insert (if available) on top of the universal tray.
- **Pre-heating** the oven compartment is only required when roasting beef sirloin joints and fillet. Pre-heating is generally not necessary.
- Use a **closed roasting dish** for roasting meat, such as an oven dish. The meat stays succulent. The oven compartment will also stay cleaner than when roasting on the rack. This ensures that sufficient stock remains for making gravy.
- If you are using a **roasting bag**, follow the instructions on the packaging.
- If you are using the **rack** or an **open roasting dish** for roasting, you can add a little fat or oil to very lean meat.
- **Season** the meat and place in the roasting dish. Dot with butter or margarine or brush with oil or cooking fat if necessary. For large lean cuts of meat (2–3 kg) and fatty poultry add about 1/8 litre of water to the dish.
- Do not add too much liquid during cooking as this will hinder the **browning** process. Browning only occurs towards the end of the cooking duration. Remove the lid about halfway through the cooking duration if a more intensive browning result is desired.
- At the end of the programme, take the food out of the oven compartment, cover it and leave to **stand** for about 10 minutes. This helps retain juices when the meat is carved.
- For a crisp finish, baste **poultry** 10 minutes before the end of the cooking duration with slightly salted water.

Notes on the cooking charts

You can find the cooking charts at the end of this book.

■ Take note of the temperature range, the shelf levels and the timings. These also take the type of cooking container, the size of the meat and cooking practices into account.

Selecting the 🌡 temperature

■ As a general rule, select the lower temperature given in the chart. If higher temperatures are used than those specified, the meat will brown on the outside, but will not be properly cooked through.

■ When cooking with Fan plus, Moisture plus and Auto roast, select a temperature which is approx. 20 °C lower than with Conventional heat.

■ For cuts which weigh more than 3 kg, select a temperature approx. 10 °C lower than that given in the roasting chart. The roasting process will take longer, but the meat will cook evenly through and the skin or crackling will not be too thick.

■ When roasting on the rack, set a temperature approx. 10 °C lower than for roasting in a covered oven dish.

Selecting the ⏲ cooking duration

Unless otherwise stated, the durations given in the roasting chart are for an oven compartment which has not been pre-heated.

- The traditional British method for calculating the roasting time is to allow 15 to 20 minutes per lb/ 450 grammes, according to type of meat, plus approx. 20 minutes, adjusting the length of time as roasting proceeds to obtain the required result. The roasting time can also be determined by multiplying the thickness of the roast [cm] with the time per cm [min/cm] stated below, depending on the type of meat:

- Beef/venison: 15–18 min/cm
- Veal/lamb: 12–15 min/cm
- Sirloin/fillet: 8–10 min/cm

- As a general rule, check the food after the shortest duration.

Tips

- For frozen meat, increase the cooking duration by approx. 20 minutes per kg.
- Frozen meat weighing less than approx. 1.5 kg does not need to be defrosted before roasting.

Notes on the functions

You can find an overview of all the functions with their recommended values in “Main and sub-menus”.

Use the Bottom heat function towards the end of the cooking duration to brown the base of the food.

Do not use the Intensive bake function for roasting as the juices will become too dark.

Using Automatic programmes Auto

- Follow the instructions in the display.

Using Fan plus or Auto roast

These functions are suitable for roasting meat, fish and poultry that needs to be well browned as well as sirloin joints and fillet.

The Fan plus function allows you to use a lower temperature than you would with the Conventional heat function, because the heat is immediately distributed around the oven compartment.

In the Auto roast function, the oven compartment heats initially to a high searing temperature (approx. 230 °C). As soon as this temperature has been reached, the oven automatically drops the temperature back down to the pre-selected roasting temperature (continued roasting).

- Place the food in shelf level 2.

Using Moisture plus

Use this function with your preferred type of heating for cooking with moisture assistance.

- Place the food in shelf level 2.

Using Conventional heat

Use this function for baking traditional recipes. If using an older recipe or cookbook, set the oven temperature 10 °C lower than the recommended one. This will not change the cooking duration.

- Place the food in shelf level 2.

Using Eco Fan heat

Use this function for cooking smaller roasts or meat dishes while saving energy.

- Place the food in shelf level 2.

Food probe

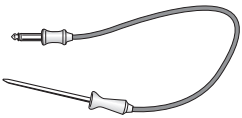

The food probe allows the temperature to be monitored precisely during a cooking programme.

How it works

The metal tip of the food probe must be fully inserted into the centre of the food all the way to the handle. There is a temperature sensor in the metal tip which measures the core temperature of the food during cooking. The rise in the core temperature of the food reflects the progress of cooking. Set a lower or higher core temperature, depending on whether you want your roast to be medium or well done.

The core temperature can be set up to 99 °C. Information on food and respective core temperatures can be found in the cooking charts at the end of this book.

The cooking duration will be similar when cooking with or without the food probe.

When to use the food probe

Some automatic programmes and special applications will prompt you to use the food probe.

You can also use the food probe with User programmes and with the following functions:

- Auto roast
- Fan plus
- Intensive bake
- Conventional heat
- Moisture plus + Auto roast
- Moisture plus + Fan plus
- Moisture plus + Intensive bake
- Moisture plus + Conv. heat

Important usage notes

- You can place the meat in a pot or on the rack.
- The metal tip of the food probe must be fully inserted into the centre of the food so that the temperature sensor reaches more or less to the core.
- When cooking poultry, insert the metal tip into the thickest part of the breast. Press the breast with your index finger and thumb to find the thickest part.
- The metal tip must not touch any bone or be inserted in areas with a lot of fat. Heavily marbled areas and bones can cause cooking to end prematurely.
- If the meat is very heavily marbled with fat, select the highest core temperature given in the cooking charts.
- When using aluminium foil or roasting bags, insert the food probe through the foil/bag into the centre of the food. You can also place meat inside the bag or foil with the food probe already inserted. Follow the roasting bag manufacturer’s instructions.

Using the food probe

- Insert the metal tip of the food probe completely into the centre of the food all the way to the handle.

If you are cooking several pieces of meat at the same time, insert the food probe into the largest piece of meat.

- Place the food in the oven compartment.

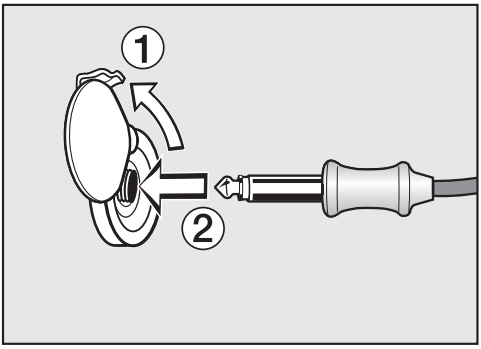

- Insert the plug of the food probe into the socket until you feel it engage.
- Close the door.
- Select the function or automatic programme.
- Set the temperature and the core temperature if necessary.

The core temperatures cannot be changed for the automatic programmes.
Follow the instructions on the display.

The cooking programme is brought to an end as soon as the core temperature is reached.

⚠ Risk of injury caused by hot surfaces.
The food probe can get hot. You could burn yourself on it.
Wear oven gloves when removing the food probe from its socket.

Delaying the start of a cooking programme with food probe

You can set the cooking process to start at a later time.

- Once you have selected a function, touch the ◷ sensor control.
- Select Start at.

The finish time can be calculated approximately because the duration of a cooking process is about the same, whether or not the food probe is used.

You cannot set Duration and Finish at because the total cooking duration is determined by when the set core temperature is reached.

Time left display

If the temperature set for a cooking programme is above 140 °C, the estimated time left will appear in the display.

The time left is calculated from the cooking temperature selected, the set core temperature, and the progress of the core temperature as it rises.

The time left first shown is an estimate. As the cooking process continues, the time left is revised continuously, and a more accurate figure is shown.

The time left will be deleted if the cooking or core temperature is changed or if a different function is selected. If the door is opened for a longer time, the time left will be recalculated.

⚠ Risk of injury caused by hot surfaces.
If you grill with the door open, hot air will escape from the oven instead of being cooled by the cooling fan. The control elements will get hot.
Grill with the oven door closed.

Tips for grilling

- Pre-heating is necessary when grilling. Pre-heat the top heat/grill element for approx. 5 minutes with the door closed.
- Trim the meat if necessary. Do not season the meat with salt before grilling as this draws the juices out.
- Add a little oil to lean meat if necessary. Do not use other types of fat as they can easily burn and cause smoke.
- Clean fish in the normal way. To enhance the flavour, season with a little salt. Fish can also be drizzled with lemon juice.
- Use the universal tray with the wire rack or the grilling and roasting insert (if present) in place. The juices collect under the insert. This prevents them from spitting and making the oven dirty and they can then be used for making gravy and sauces. Brush the wire rack or the grilling and roasting insert with oil and then place the food on top.

Do not use the baking tray.

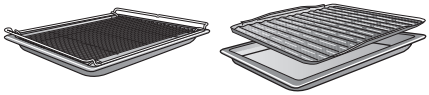

Notes on the cooking charts

You can find the cooking charts at the end of this book.

- Take note of the temperature range, the shelf levels and the durations. These take the size of the meat and cooking practices into account.
- Check the food after the shortest duration quoted.

Selecting the 🌡 temperature

- As a general rule, select the lower temperature given in the chart. If higher temperatures are used than those specified, the meat will brown on the outside, but will not be properly cooked through.

Choosing a shelf level

- Select the shelf level depending on the thickness of the food to be cooked.
- Place flat food in shelf level 3 or 4.
- Place thicker food in shelf level 1 or 2.

Selecting the ⏲ cooking duration

- Grill thinner cuts of meat/slices of fish for approx. 6–8 minutes per side. It is best to grill food of a similar thickness at the same time so that the cooking durations do not vary too much.
- As a general rule, check whether the food is cooked after the shortest duration.
- To **test the food**, press down on the meat with a spoon. This lets you determine how well the meat has been cooked.

- **Rare/pink**
  If the meat gives easily to the pressure of the spoon, it will still be red on the inside.
- **Medium**
  If there is some resistance, the inside will be pink.
- **Well done**
  If there is very little resistance, it is cooked through.

Tip: If the surface of a thicker cut of meat is browned but the centre is still raw, move the food to a lower level or reduce the temperature and continue grilling. This will stop the surface from becoming excessively charred.

Notes on the functions

You can find an overview of all the functions with their recommended values in “Main and sub-menus”.

The plastic on the food probe can melt at very high temperatures.

Do not use the food probe when using the grill functions.

Do not store the food probe in the oven compartment when it is not being used.

Using Full grill

Use this function to grill flat thin cuts in large quantities and for browning large baked dishes.

The whole of the top heating/grill element glows red to provide the required heat.

Using Fan grill

This function is suitable for grilling thicker food, such as chicken.

A temperature setting of 220 °C is generally recommended for thinner types of food, while 180–200 °C is recommended for thicker cuts.

⚠ Danger of injury caused by hot surfaces.
The oven gets hot during operation. You could burn yourself on the heating elements, oven compartment or accessories.
Allow the heating elements, oven compartment and the accessories to cool before manual cleaning.

⚠ Risk of injury due to electric shock.
The steam from a steam cleaning appliance could reach live electrical components and cause a short circuit.
Never use a steam cleaner for cleaning.

Failure to maintain the oven in a clean condition could lead to deterioration of the surface that could adversely affect the life of the appliance and possibly result in a hazardous situation.
Surfaces can discolour or alter if unsuitable cleaning agents are used. The oven front is particularly susceptible to damage from oven cleaners or descaling agents.
All surfaces are susceptible to scratching. Scratches on glass can in some circumstances lead to breakage.
Remove all cleaning agent residues immediately.

Cosmetic products, especially sunscreen, and hand disinfectants can leave stains on matt glass surfaces.
If cosmetic products come into contact with a matt glass surface, remove the residue immediately with hot water, washing-up liquid and a clean microfibre cloth.

Unsuitable cleaning agents

To avoid damaging the surfaces, do not use:

- Cleaning agents containing soda, ammonia, acids or chlorides
- Cleaning agents containing descaling agents on the front
- Abrasive cleaning agents (e.g. powder cleaners, scouring milk, scouring pads)
- Solvent-based cleaning agents
- Stainless steel cleaners
- Dishwasher cleaning agents
- Glass cleaning agents
- Cleaning agents for ceramic glass hobs
- Hard, abrasive brushes or sponges (e.g. pot scourers, brushes or sponges which have been previously used with abrasive cleaning agents)
- Stain remover eraser blocks
- Sharp metal scrapers
- Steel wool
- Spot cleaning with mechanical cleaning agents
- Oven cleaners
- Stainless-steel spiral pads

If soiling is left on for any length of time, it may become impossible to remove. If items are used frequently without being cleaned, it may become very difficult to clean them.

It is therefore best to remove any soiling immediately.

The accessories are not dishwasher-safe.

Tip: Soiling caused by spilt fruit juices and cake mixtures is best removed while the oven compartment is still warm.

To make it easier to clean the oven:

- Remove the door.
- Take out the side runners with FlexiClip runners (if fitted).
- Lower the top heat/grill element.

Removing normal soiling

There is a delicate fibreglass seal around the oven compartment to seal the glass in the oven door. This can be damaged by rubbing or scouring.
Avoid cleaning the fibreglass seal.

Removing normal soiling

- Remove normal soiling immediately with warm water, washing-up liquid and a clean sponge or a clean, damp microfibre cloth.
- Remove all cleaning agent residues thoroughly with clean water.
  This is particularly important for any parts with a PerfectClean finish, as cleaning agent residues will impair the non-stick function.
- After cleaning, wipe the surfaces dry using a soft cloth.

Cleaning the food probe

Do not put the food probe into water or clean it in the dishwasher as this will damage it.

Clean the food probe with a damp cloth only.

Removing stubborn soiling (excluding the FlexiClip runners)

Spilt fruit and roasting juices may cause lasting discolouration or matt patches on surfaces. This discolouration will not affect the properties of the surface finish.

Do not attempt to remove these stains. Only use the equipment specified.

- Baked-on deposits can be removed with a glass scraper or with a stainless-steel spiral pad (e.g. Spontex Spirinett), hot water and washing-up liquid.

Pyrolytic cleaning of the oven compartment

Instead of cleaning the oven compartment manually you can run the Pyrolytic function.

During pyrolytic cleaning the oven compartment reaches temperatures in excess of 400 °C. Any residual soiling is burnt off and turned to ash by the high temperatures.

There are 3 pyrolytic settings available, each with a different duration:

- Level 1 for light soiling
- Level 2 for heavier soiling
- Level 3 for very heavy soiling

The oven door is automatically locked when the pyrolytic cleaning process is started. It cannot be opened until after the programme has finished.

The timer can be used to delay the start time of the pyrolytic cleaning programme, for instance to make use of cheaper electricity tariffs.

At the end of the pyrolytic cleaning programme any residues such as ash from the pyrolytic process, which may be formed depending on the oven compartment's degree of soiling, can be easily wiped away.

Preparing for pyrolytic cleaning

Accessories that are not suitable for pyrolytic cleaning will be damaged by the high temperatures.

Remove all accessories that are not suitable for pyrolytic cleaning from the oven compartment before starting the pyrolytic cleaning programme. This also applies for optional accessories that are not suitable for pyrolytic cleaning.

The accessories below are suitable for pyrolytic cleaning and can be left in the oven compartment during pyrolytic cleaning:

– Side runners
– FlexiClip runners HFC 72
– Rack HBBR 72

- Remove all accessories that are not suitable for pyrolytic cleaning from the oven.
- Place the rack on the top shelf level.

Coarse soiling in the oven compartment can cause thick smoke to develop.
Burnt-on residues can cause lasting discolouration or matt spots on enamelled surfaces.

Before starting the pyrolytic cleaning programme, remove coarse soiling from the oven compartment and scrape any burnt-on residues off enamelled surfaces with a glass scraper.

Starting pyrolytic cleaning

⚠ Risk of injury caused by hazardous steam.

During pyrolytic cleaning, steam, which can irritate mucous membranes, can be released.

During pyrolytic cleaning, do not stay in the kitchen for longer periods of time and do not let children and pets enter the kitchen.

It is important to ensure that the kitchen is well ventilated during pyrolytic cleaning. Prevent the odour from escaping into other rooms.

⚠ Risk of injury caused by hot surfaces.

The oven gets much hotter during pyrolytic cleaning than during normal use.

Do not let children touch the oven during pyrolytic cleaning.

- Select Pyrolytic [ ].
- Select the level required according to the amount of soiling.
- Confirm with *OK*.

Follow the instructions in the display.

- Confirm with *OK*.

You can start the pyrolytic cleaning programme straight away or delay the start time.

Starting pyrolytic cleaning straight away

- To start the pyrolytic cleaning programme straight away, select Start now.
- Confirm with *OK*.

The pyrolytic cleaning programme will start.

The door will lock automatically. The oven heating and the cooling fan will then switch on automatically.

The oven interior lighting will not come on during the pyrolytic cleaning programme.

The time remaining for the pyrolytic cleaning programme will start counting down in the display. You cannot alter the duration.

You can use the minute minder at the same time as running the cleaning programme. At the end of the minute minder time the buzzer will sound, 🔔 will start flashing and the time can be viewed counting up in the display. To switch of the visual and acoustic signals, touch the 🔔 sensor control.

Starting pyrolytic cleaning at a later time

- To start the pyrolytic cleaning programme later, select Start at.
- Confirm with *OK*.
- Set the time when you want the pyrolytic cleaning programme to start.
- Confirm with *OK*.

The door will lock automatically. Start at and the start time set will appear in the display.

The [🧹] sensor control lights up orange.

You can reset the start time via the ⏲ sensor control at any point up to the starting time.

As soon as the start time has been reached, the oven heating and cooling fan will switch on automatically and the time remaining will appear in the display.

Finishing off the pyrolytic cleaning process

When the time remaining has counted down to 0:00 h, a message will appear in the display to tell you that the door is unlocking.

Process finished will appear in the display and a buzzer will sound as soon as the door has been unlocked.

- Switch the oven off.

The visual and acoustic signals will switch off.

> ⚠ Risk of injury caused by hot surfaces.
> At the end of the pyrolytic cleaning function, the oven will still be very hot. You could burn yourself on the heater elements, oven compartment or accessories.
> Allow the heater elements, oven compartment and accessories to cool down before removing any pyrolytic residues or oiling the side runners.

- Clean the oven compartment and accessories suitable for pyrolytic cleaning to remove any pyrolytic residues (e.g. ash) that can build up depending on the degree of soiling in the oven compartment.

- Add a few drops of heat-resistant cooking oil to some kitchen paper and use this to lubricate the side runners.

Most residues can be removed with hot water, a little washing-up liquid and a clean sponge or a clean, damp microfibre cloth.

Depending on the degree of soiling, a visible deposit could build up on the glass on the inside of the oven door. This can be removed with a dishwashing sponge, a glass scraper or a stainless steel spiral pad (e.g. Spontex Spirinett) and a little washing-up liquid.

There is a delicate fibreglass seal around the oven compartment to seal the glass in the oven door. This can be damaged by rubbing or scouring.
Avoid cleaning the fibreglass seal.

Enamelled surfaces can be permanently discoloured by spilt fruit juices. Such discolouration does not affect the properties of the enamel.

Do not attempt to remove these stains.

Extending and retracting the FlexiClip runners

After cleaning, discolouration or light patches can remain on the FlexiClip runners. However this does not affect their operation.

- Extend and retract the FlexiClip runners several times after running the pyrolytic cleaning programme.

Descale

The frequency of descaling will depend on the water hardness level in your area.

The descaling process can be run at any time.

However, to ensure that the oven functions correctly, you will be automatically prompted to run the descaling process for the steam injection system after a certain number of cooking processes.

The oven will count down in the display the last 10 cooking processes that can be run before it needs to be descaled. You will then not be able to run any operating mode or automatic programme using moisture assistance.

These operating modes can only be used again after you have carried out a descaling process. All other operating modes and automatic programmes without moisture assistance can still be used.

Descaling process sequence

Once the descaling process has been started it must be completed through to the end. It cannot be cancelled.

Descaling takes approx. 90 minutes and consists of several steps:

1. Preparing the descaling process
2. Drawing in the descaling solution
3. Activation phase
4. Rinse 1
5. Rinse 2
6. Rinse 3
7. Residual water evaporation

Preparing the descaling process

You will need a container of approx. 1 litre capacity.

A plastic tube (with suction cup) is supplied with your oven so that you do not have to hold the container with the descaling agent underneath the water intake pipe.

We recommend using the descaling tablets supplied. They have been specially developed for Miele for optimum results.

Tip: Miele descaling tablets are available to order from the Miele webshop, from Miele or from your Miele dealer.

Other descaling agents, which contain other acids besides citric acid and/or other undesirable substances, such as chlorides for example, could cause damage.

Moreover, the descaling result required could not be guaranteed if the descaling solution was not of the appropriate concentration.

- Fill the container with approx. 600 ml of cold tap water and thoroughly dissolve one descaling tablet in it.

Carrying out the descaling process

- Select Further ⧉.
- Select Descale.

If the functions and automatic programmes that use added moisture are already locked, the descaling process can be started immediately by touching *OK*.

- Push the universal tray into the top shelf level as far as it will go to collect the descaling solution after it has been used. Confirm the message shown with *OK*.

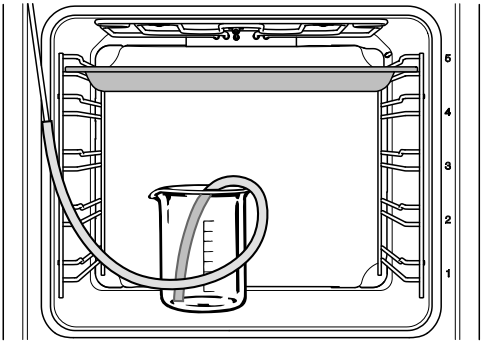

- Place the container with the descaling solution on the floor of the oven compartment.
- Attach one end of the plastic tube to the water intake pipe. Place the other end of the plastic tube in the bottom of the descaling solution container and secure the plastic tube to the container with the suction cup.
- Confirm with *OK*.

The water intake process will begin. You will hear the noise of the pump.

You can interrupt and resume the intake process at any time by selecting *OK*.

The amount of solution specified may exceed the amount which is actually taken in. Some of the solution may therefore be left in the container at the end of descaling.

A message will appear to confirm that the intake process is complete.

- Confirm with *OK*.

The **activation phase** will begin. You can watch the time counting down in the display.

- Leave the container in the oven with the tube still connected to the water intake pipe. Top the container up with approx. 300 ml of water, as the system will need to draw in some more liquid during the activation phase.

The system will take in more liquid at approximately 5 minute intervals. You will hear the noise of the pump.

The interior lighting and cooling fan remain switched on for the whole duration of the process.

At the end of the activation phase a buzzer will sound.

Rinsing the steam injection system after the activation phase

After the activation phase the steam injection system must be rinsed out to remove residues of descaling solution.

To do this approx. 1 litre of fresh tap water is pumped through the steam injection system three times and is collected in the universal tray.

- Take the universal tray with the collected descaling agent out of the oven and empty it. Place the tray back in the oven again on the top shelf level.
- Remove the plastic tube from the container.
- Remove the container, rinse it out thoroughly and fill it with approx. 1 litre of fresh tap water.
- Replace the container in the oven compartment and secure the plastic tube in the container.
- Confirm with *OK*.

The intake process for the **first rinse** will start.

The water is fed through the steam injection system and is collected in the universal tray.

Instructions for preparing the **second rinse** will appear.

- Take the universal tray with the collected rinse water out of the oven and empty it. Place the tray back in the oven again on the top shelf level.
- Remove the plastic tube from the container and fill it with approx. 1 litre of fresh tap water.
- Replace the container in the oven compartment and secure the plastic tube in the container.
- Confirm with *OK*.
- Proceed in exactly the same way for the **third rinse**.

Leave the universal tray with the collected rinse water from the third rinse in the oven compartment during residual moisture evaporation.

Evaporating residual moisture

After the third rinse residual moisture evaporation will commence.

- Remove the container and tube from the oven compartment.
- Close the door.
- Confirm with *OK*.

⚠ Danger of injury caused by steam.
Steam can cause severe scalding.
Do not open the door while the residual water is being evaporated.

The oven heating will switch on and the duration of residual moisture evaporation will appear.

The duration is amended automatically depending on the actual amount of residual moisture.

Finalising the descaling process

At the end of residual water evaporation, an information window appears with tips on cleaning after the descaling process.

- Confirm with *OK*.

A buzzer sounds and Finished appears.

- Switch the oven off with the ⏻ On/ Off sensor control.

> ⚠ Risk of injury caused by hot surfaces.
> The oven gets hot during operation. You could burn yourself on the heater elements, oven compartment or accessories.
> Allow the heater elements, oven compartment and accessories to cool before manual cleaning.

- Remove the universal tray with the collected fluid and empty it.
- When the oven compartment has cooled down, clean away any condensation and descaling agent residues.
- Leave the oven door open until the oven compartment is completely dry.

Door removal

The door weighs approx. 10 kg.

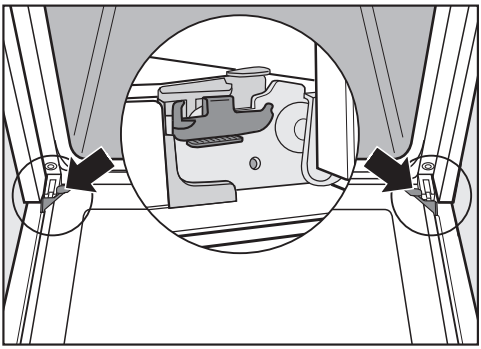

The oven door is connected to the door hinges by retainers.
Before removing the door from the retainers, the locking clamps on both door hinges have to be released.

- Open the door fully.

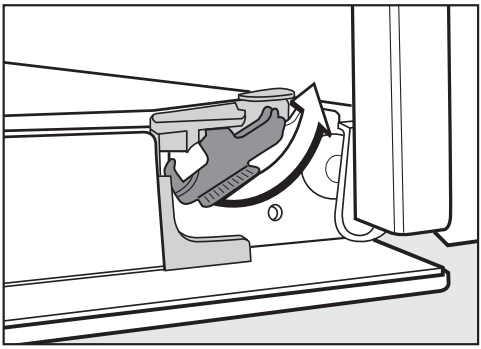

- Release the locking clamps by turning them as far as they will go.

The oven could become damaged if you incorrectly remove the door.
Never pull the door horizontally off its retainers, as they will spring back against the oven.

- Raise the door up till it rests partially open.

- Hold the door on either side and pull it diagonally upwards off the retainers. Make sure that the door goes back on straight.

Dismantling the door

The oven door is an open system with 4 glass panes which have a heat-reflective coating on some of their surfaces.

When the oven is operating, air is directed through the door to keep the outer pane cool.

If soiling has worked its way in between the glass panes, the door can be dismantled in order to clean in between the panes.

Scratches on the door glass can cause the glass to break.
Do not use abrasive cleaners, hard sponges, brushes or sharp metal tools to clean the door glass.
When cleaning the door glass, you must also follow the instructions that apply to the oven front.

The different sides of the door glass have different coatings. The sides facing the oven compartment have heat-reflecting properties.
The oven could become damaged if you fit the door glass the wrong way round.
Make sure that you place the door glass back in the right position after cleaning.

Oven cleaners will damage the surface of the aluminium profiles.
Only clean these parts with warm water and washing-up liquid, applied with a clean sponge cloth or a clean, damp microfibre cloth.

The door glass could break if dropped.
Keep the disassembled door glass in a safe place.

⚠ Risk of injury caused by the door slamming shut.
The door may slam shut if you attempt to disassemble it when it is fitted to the oven.
Always remove the door before disassembling it.

- Place the door with the outer glass pane on a soft surface (e.g. a tea towel) to prevent it getting scratched.

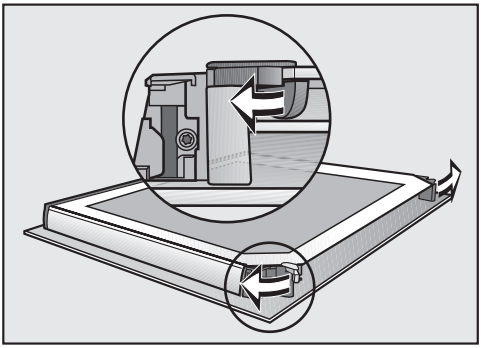

- Flip the two glass pane retainers outwards to open them.

Remove the inner pane and the two middle panes one after the other:

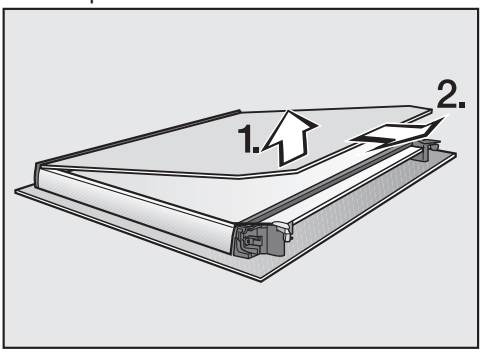

- **Gently** lift the inner pane up and out of the plastic strip.

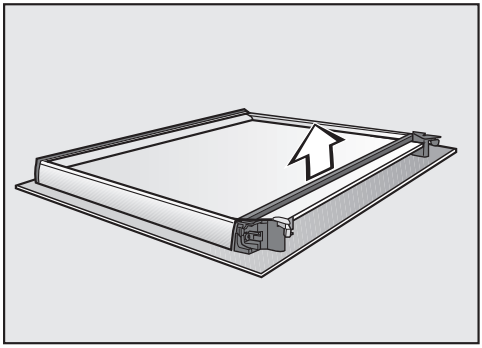

- Remove the seal.

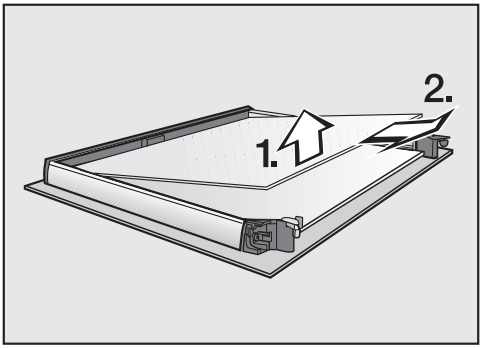

- Carefully lift the upper of the two middle panes up and take it out.

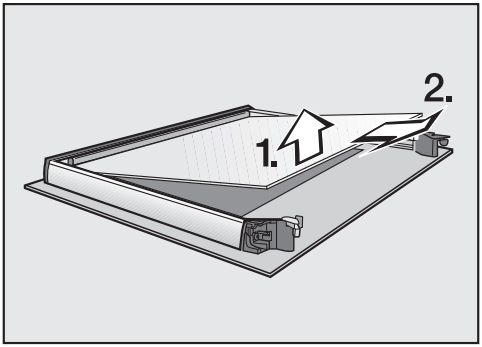

- Then lift the lower of the two middle panes up carefully and take it out.
- Clean the door panes and other parts with a clean sponge and a solution of hot water and washing-up liquid or a clean, damp microfibre cloth.

- Dry all parts with a soft cloth.

Then reassemble the door carefully:

The two middle panes are identical. To help you put them back in correctly, the material number is printed on the panes.

- Refit the lower of the two middle panes in such a way that the material number is legible (i.e. not reversed).

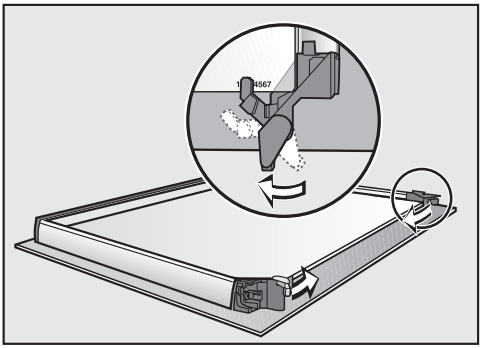

- Flip both the glass pane retainers inwards in such a way that they fit over the lower of the two middle panes.
- Refit the upper of the two middle panes in such a way that the material number is legible (i.e. not reversed). The pane must rest on the retainers.

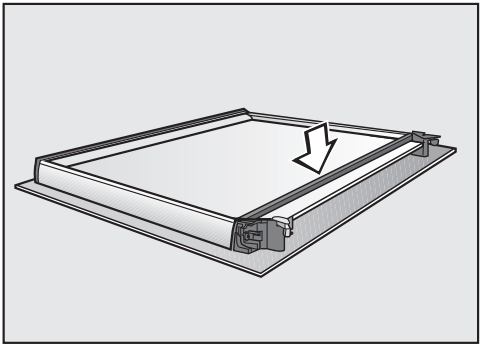

- Refit the seal.

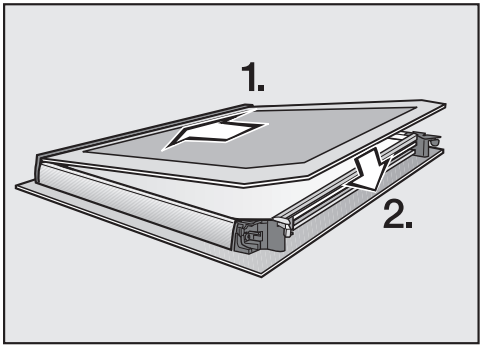

- Push the inner pane with the matt printed side facing downwards into the plastic strip and place it between the retainers.

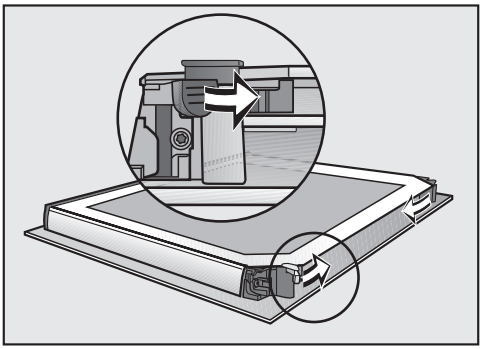

- Flip both the glass pane retainers inwards to close them.

The door is now reassembled.

Fitting the door

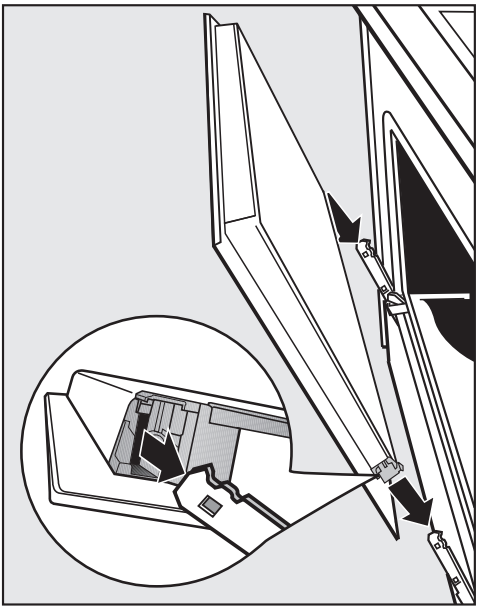

- Hold the door securely on both sides and carefully fit it back into the hinge retainers.
  Make sure that you fit the door straight.
- Open the door fully.

If the locking clamps are not locked, the door could become loose, resulting in damage.
Always ensure that the locking clamps are locked after refitting the door.

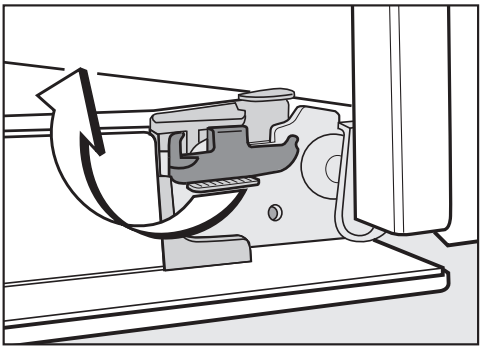

- To relock the locking clamps, turn them back up to the horizontal position as far as they will go.

Removing the side runners with FlexiClip runners

The side runners can be removed together with the FlexiClip runners (if inserted).

If you wish to remove the FlexiClip runners separately beforehand, please follow the instructions in “Features” – “Fitting and removing FlexiClip runners”.

⚠ Danger of injury caused by hot surfaces.
The oven gets hot during operation. You could burn yourself on the heating elements, oven compartment or accessories.
Allow the heating elements, oven compartment and accessories to cool before removing the side runners.

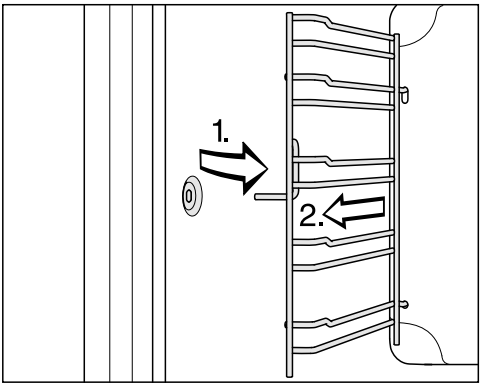

- Pull the side runners out of holder (1.) and remove them (2.).

Reassemble by following these instructions in reverse order.

- Insert the components carefully.

Lowering the top heat/grill element

If the oven compartment roof is badly soiled, the top heat/grill element can be lowered to make cleaning easier. Clean the oven compartment roof regularly with a damp cloth or a dishwashing sponge.

⚠ Danger of injury caused by hot surfaces.
The oven gets hot during operation. You could burn yourself on the heating elements, oven compartment or accessories.
Allow the heating elements, oven compartment and the accessories to cool before manual cleaning.

The enamel on the oven floor can become damaged by fastening nuts being dropped on it.
Place a cloth or similar item over the oven compartment floor to protect it.

- Remove the side runners.

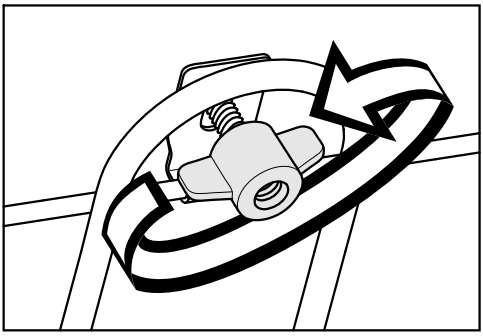

- Unscrew the wing nut.

Be careful not to damage the top heat/grill element.
Never use force when lowering the top heat/grill element.

- Carefully lower the top heat/grill element.

You can now access the top of the oven compartment.

- Clean the ceiling of the oven with hot water and washing-up liquid, applied with a clean sponge cloth or a clean, damp microfibre cloth.
- After cleaning, raise the top heat/grill element gently back up again.
- Replace the wing nut and tighten it securely.
- Fit the side runners.

Problem solving guide

Many malfunctions and faults that can occur in daily operation can be easily remedied. You can save time and money in many cases, as you do not need to call your Miele dealer.

The following tables are designed to help you to find the cause of a malfunction or a fault and to resolve it.

Issue	Cause and remedy
The display is dark.	You have selected the Time | Show | Off setting. When the oven is switched off, the display is dark. ■ As soon as the oven is switched on, the main menu will appear. If you want the time of day to be displayed constantly, select the Time | Show | On setting.
	There is no power to the oven. ■ Check that the oven plug is correctly inserted into the socket and switched on. ■ Check whether the circuit breaker has tripped. Contact a qualified electrician or your Miele dealer.
The buzzer does not sound.	The buzzers are deactivated or set at too low a volume. ■ Switch on the buzzers or increase the volume with the Volume | Buzzer tones setting.
The oven compartment does not heat up.	Demo mode is active. You can select menu options in the display and the sensor controls, but the oven heating does not work. ■ Deactivate demo mode with the Showroom programme | Demo mode | Off setting.
The sensor control flashes when you switch on the oven.	You have not yet connected your oven to a WiFi network. The sensor control flashes to tell you that you can easily network the oven using this sensor control. The sensor control will stop flashing once the oven has been switched on and off multiple times, but the networking function will remain active.

Issue	Cause and remedy
You cannot open the door with the ▭ sensor control.	You have selected the Display | QuickTouch | Off setting. The ▭ sensor control does not respond when the oven is switched off. ■ As soon as the oven is switched on, the sensor controls will respond. If you want the sensor controls to respond even when the oven is switched off, select the Display | QuickTouch | On setting.
	The oven is not switched on at the mains. ■ Make sure that the plug is correctly inserted in the socket and that the socket switch has been flicked to on, or that the appliance has been switched on at the mains. ■ Check whether the fuse has tripped. If it has, contact a qualified electrician or your Miele dealer. ■ If you need to open the door, e.g. because there is still food in the oven compartment, use the opener supplied to lever the door open. To do this, look for the gap between the fascia panel and the door on the top outside edge of the door, and insert the opener into the gap at an angle. You can also pull the door open by grasping the side of the door with both hands and pulling carefully until it opens.
	The pyrolytic cleaning programme has been started. ⚠ Risk of injury caused by hot surfaces. During pyrolytic cleaning, the oven door will remain locked until the temperature inside the oven drops to below 280 °C. Do not attempt to lever open the door with the opener as described above! ■ Wait until the oven has cooled down. The door will unlock itself automatically as soon as the temperature in the oven has dropped below 280 °C.

Issue	Cause and remedy
The sensor controls do not respond.	You have selected the Display | QuickTouch | Off setting. When the oven is switched off, the sensor controls do not respond. ■ As soon as the oven is switched on, the sensor controls will respond. If you want the sensor controls to respond even when the oven is switched off, select the Display | QuickTouch | On setting.
	The oven is not connected to the power supply. ■ Check that the oven plug is correctly inserted into the socket and switched on. ■ Check whether the fuse has tripped. Contact a qualified electrician or your Miele dealer.
	There is a fault with the controls. ■ Touch and hold the ⏻ On/Off button until the display switches off and the oven restarts.
Press OK for 6 seconds to unlock **appears in the display when the oven is switched on.**	The 🔒 system lock has been activated. ■ You can deactivate the system lock for a programme by touching the *OK* sensor control for at least 6 seconds. ■ If you want to permanently deactivate the system lock, select the Safety | System lock 🔒 | Off setting.
Power cut -process cancelled **appears in the display.**	There has been a brief power cut. This has caused the current cooking programme to stop. ■ Switch the oven off and then back on again. ■ Restart the cooking programme.
12:00 **appears in the display.**	The power supply was interrupted for longer than 150 hours. ■ Reset the time and date.
Maximum operating hours reached **appears in the display.**	The oven has been operating for an unusually long time. This has triggered the safety switch-off function. ■ Confirm with *OK*. The oven is now ready to use.
⚠ Fault **F32 appears in the display.**	The door lock for pyrolytic cleaning has not locked. ■ Switch the oven off and then back on again. Start the pyrolytic cleaning programme again. ■ If the message appears again, contact your Miele dealer.

Issue	Cause and remedy
⚠ Fault **F33 appears in the display.**	The door lock for pyrolytic cleaning has not opened. ■ Switch the oven off and then back on again. ■ If the door lock still does not deactivate itself, contact your Miele dealer.
Fault **and a fault code not listed here appears in the display.**	A fault has occurred that you cannot resolve. ■ Call your Miele dealer.
Function currently not available **appears in the display after selecting the Descale function.**	The steam injection system is faulty. ■ Call your Miele dealer.
Programmes that use added moisture are not taking in water.	Demo mode is active. You can select menu options in the display and the sensor controls, but the pump for the steam injection system is not working. ■ Deactivate Demo mode by selecting Settings | Showroom programme | Demo mode | Off.
	The pump for the steam injection system is faulty. ■ Call your Miele dealer.
A noise can be heard after a cooking programme.	The cooling fan remains switched on after a cooking programme (see “Settings – Cooling fan run-on”).
The oven has switched itself off.	To save power, the oven switches off automatically if a button is not pressed after a certain amount of time or after a cooking programme has ended. ■ Switch the oven back on.
Cakes/biscuits are not cooked properly after the duration given in the cooking chart.	A different temperature from the one given in the recipe was used. ■ Select the temperature required for the recipe.
	The ingredient quantities are different from those given in the recipe. ■ Check whether you amended the recipe. The addition of more liquid or more eggs makes a moister mix which requires a longer cooking duration.

Issue	Cause and remedy
The browning of the baked goods is uneven.	The wrong temperature or shelf level was selected. ■ There will always be a slight unevenness in browning. If browning is very uneven, check whether the correct temperature and shelf level were selected.
	The material or colour of the bakeware is not suitable for the oven function selected. ■ When using the Conventional heat function, light coloured, shiny tins will not produce as desirable results. Dark, matt tins are best for baking.
There is still soiling in the oven compartment after a pyrolytic cleaning programme.	The pyrolytic cleaning programme burns off soiling in the oven and leaves it as ash. ■ Remove the ash using a damp microfibre cloth or with a clean sponge and a solution of hot water and washing-up liquid. If there is still coarse soiling left in the oven after the pyrolytic cleaning programme you should start the programme again, selecting a longer duration if necessary.
The accessories make noises when being pushed into or pulled out of the oven.	The pyrolytic resistant surface of the side runners creates friction when accessories are being pushed into or pulled out of the oven. ■ To reduce the friction, add a few drops of heat resistant cooking oil to some kitchen paper and use this to lubricate the side runners. Repeat this after every pyrolytic cleaning programme.
The oven interior lighting switches off after a short time.	You have selected the Lighting | "On" for 15 seconds setting. ■ If you want the oven interior lighting to be switched on during the entire cooking programme, select the Lighting | On setting.
The oven interior lighting is off or does not switch on.	You have selected the Lighting | Off setting. ■ Press the ☼ sensor control to switch on the oven interior lighting for 15 seconds. ■ If required, select the Lighting | On or "On" for 15 seconds setting.
	The oven interior lighting is faulty. ■ Call your Miele dealer.

Information to help you rectify faults yourself and about Miele spare parts can be found at www.miele.com/service.

Contact in case of malfunction

In the event of any faults which you cannot remedy yourself, please contact your Miele dealer.

Contact details for your Miele dealer are given at the end of this document.

Please quote the model and serial number of your appliance when contacting your Miele dealer. This information can be found on the data plate.

This information is given on the data plate, which is visible on the front frame of the oven when the door is fully open.

Warranty

For information on the appliance guarantee specific to your country please contact your Miele dealer. See end of this booklet for contact details.

Installation dimensions

Dimensions are given in mm.

Installation in a tall or base unit

When building the oven into a base unit underneath a hob, please also observe the installation instructions for the hob as well as the building-in depth required for the hob.

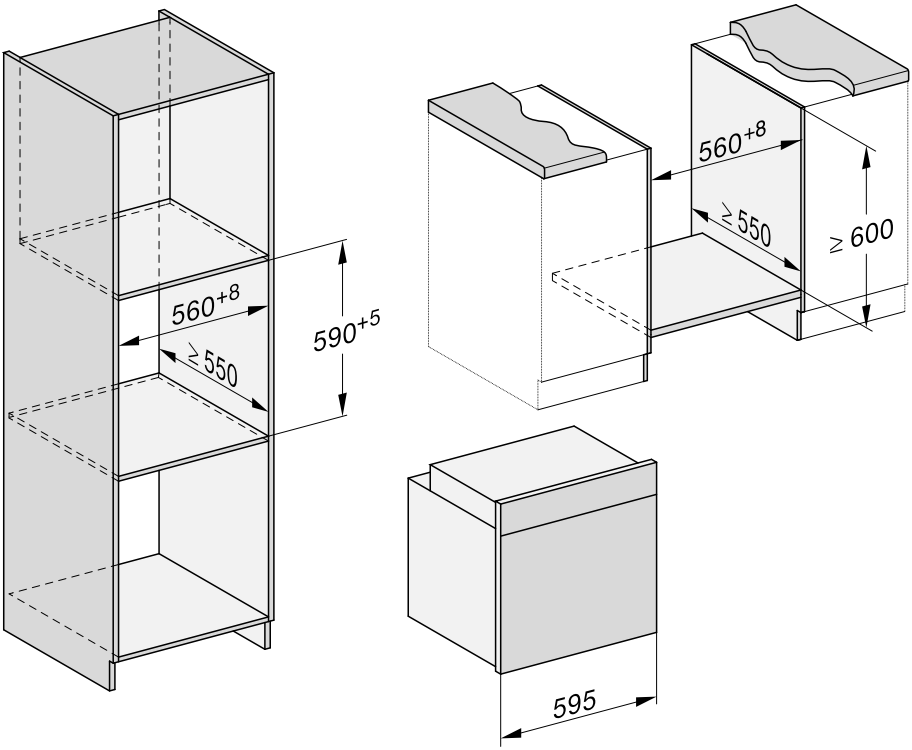

Side view

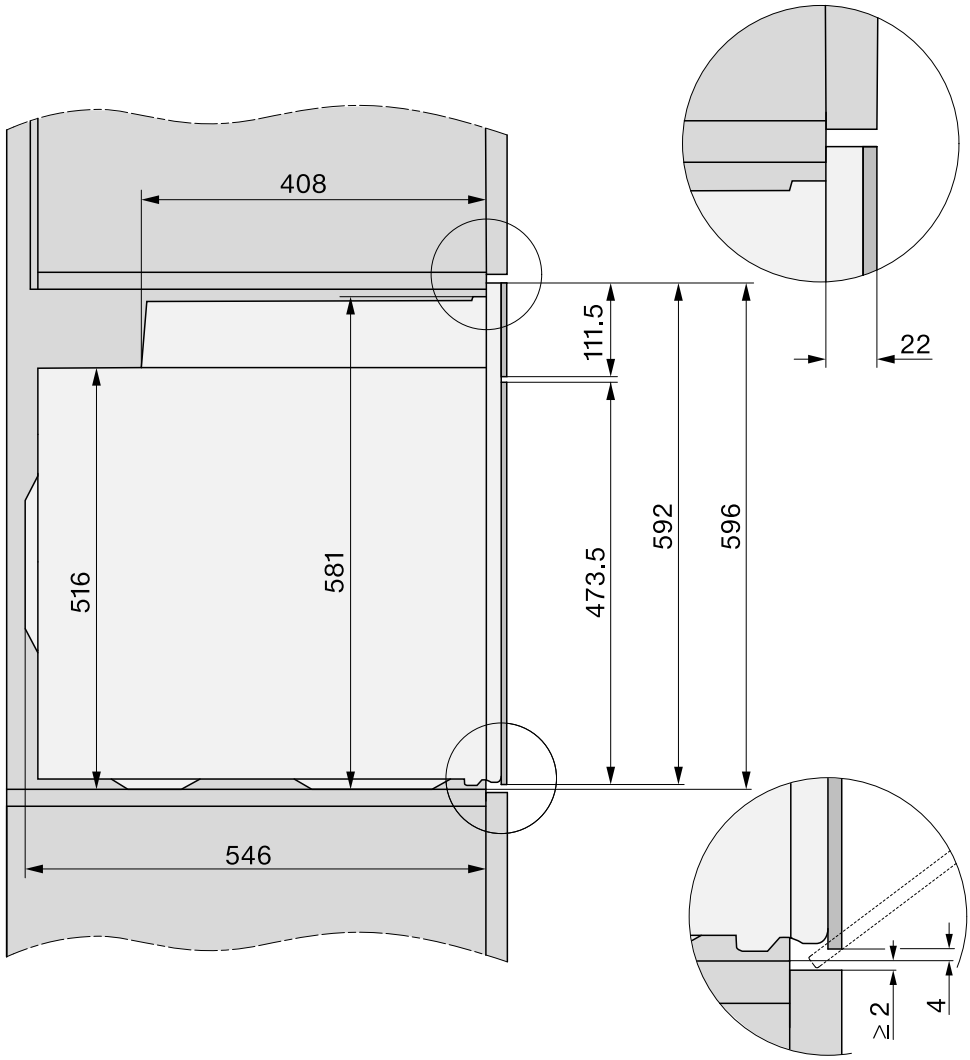

Connections and ventilation

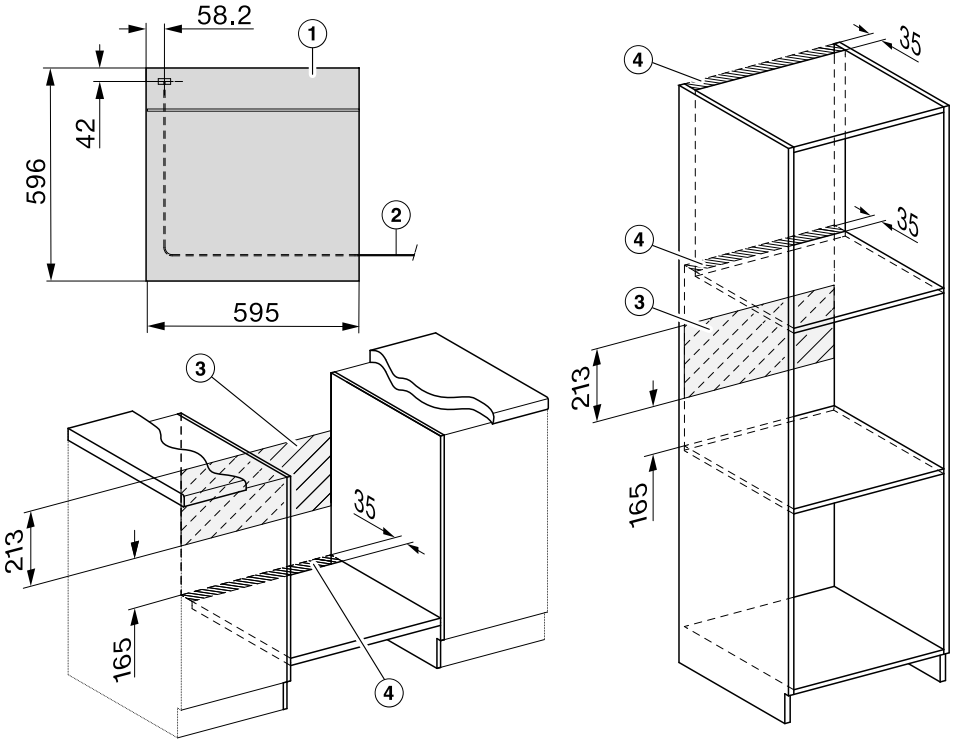

① Front view

② Mains supply cord, length = 1.500 mm

③ No connections permitted in this area

④ Ventilation cut-out, min. 150 cm^2

Installing the oven

For safety reasons, the oven may only be used when it has been fully installed.

The oven requires a sufficient supply of cool air for efficient operation. The required supply of cool air must not be excessively heated by other heat sources (e.g. solid fuel stoves).

The following must be observed when installing the appliance:
Make sure that the shelf that the oven sits on does not touch the wall.
Do not fit heat insulation strips to the side walls of the housing unit.

- Connect the oven to the electrical supply.

Use the recessed grips on the side of the housing to carry the appliance. It is a good idea to remove the door (see “Cleaning and care” – “Door removal”) and to remove the accessories before installing the appliance. This makes the oven lighter when you push it into the housing unit.

- To remove the door, use the opener supplied to prise the door open. You can also pull the door open by grasping the sides of the door with both hands and pulling carefully until it opens.
- Remove the door (see “Cleaning and care” – “Door removal”) and take the accessories out of the oven.
- Push the oven into the housing unit and align it.
- Reconnect the mains power to the isolator switch.
- Touch the sensor control to open the door if you have not removed it already.

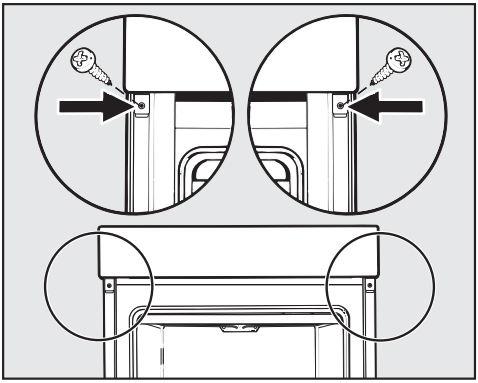

- Use the screws supplied to secure the oven to the side walls of the housing unit.
- Refit the door if necessary (see “Cleaning and care” – “Fitting the door”).

Electrical connection

All electrical work should be carried out by a suitably qualified and competent Miele approved technician in strict accordance with local and national safety regulations.

This appliance is supplied with a power cord without plug for fixed connection to your power system.

Fuse rating of branch circuit should be minimum 15 A and maximum 30 A.

The voltage and connected load are given on the data plate situated at the front of the oven interior. Please ensure that these match the household mains supply.

Connection should be made via a fused connection unit or a suitable isolator, which complies with national and local safety regulations, and the on/off switch should be easily accessible after the appliance has been installed.

If the switch is not accessible after installation (depending on country) an additional means of disconnection must be provided for all poles.

Switches with a minimum all-pole contact gap of 3 mm are suitable for isolating the appliance. These include circuit breakers, fuses and protective devices.

For extra safety it is advisable to install a suitable residual current device (RCD) / ground fault interrupter (GFI). Contact a qualified electrician for advice.

If the supply cord is damaged, it must be replaced by the manufacturer, its service agent or similarly qualified persons in order to avoid a hazard. For safety reasons, such replacement may only be carried out by a qualified specialist or your Miele dealer.

The wires in the mains lead are coloured as follows:

Green/yellow = earth

Blue = neutral

Brown = live

When replacing the cable supplied with another cable or changing the connection, only cable type H 05 VV-F with a suitable cross-sectional area (CSA) may be used.

⚠ **WARNING - THIS APPLIANCE MUST BE EARTHED**

Temporary or permanent operation on an autonomous power supply system or a power supply system that is not synchronised with the mains power supply (e.g. island networks, back-up systems) is possible. A prerequisite for operation is that the power supply system complies with the specifications of EN 50160 or an equivalent standard. The function and operation of the protective measures provided in the domestic electrical installation and in this Miele product must also be maintained in isolated operation or in operation that is not synchronised with the mains power supply, or these measures must be replaced by equivalent measures in the installation. As described, for example, in the current version of
BS OHSAS 18001–2 ISO 45001.

Creamed mixture

Cakes/biscuits (accessories)		[°C]			[min]	CF
Muffins (1 tray)		150–160	–	2	25–35	–
Muffins (2 trays)		150–160	–	1+3	30–40[3]	–
Small cakes (1 tray)		150	–	2	30–40	–
		160[2]	–	3	20–30	–
Small cakes (2 trays)		150[2]	–	1+3	25–35	–
Madeira cake (baking and roasting rack, loaf tin, 30 cm)[1]		150–160	–	2	60–70	–
		155–165[2]	–	2	60–70	✓
Marble, nut cake (baking and roasting rack, loaf tin, 30 cm)[1]		150–160	–	2	60–70	–
		150–160	–	2	60–70	–
Marble, nut cake (baking and roasting rack, ring tin/Bundt cake tin, ∅ 26 cm)[1]		150–160	✓	2	55–65	–
		150–160	✓	2	60–70	–
Fresh fruit cake (1 tray)		150–160	–	2	40–50	✓
		155–165	–	1	40–50	✓
Fresh fruit cake (baking and roasting rack, springform cake tin, ∅ 26 cm)[1]		150–160	✓	2	55–65	✓
		165–175[2]	–	2	50–60	✓
Flan base (baking and roasting rack, flan base tin, ∅ 28 cm)[1]		150–160	–	2	25–35	–
		170–180[2]	–	2	15–25	–

Operating mode, Temperature, Booster, Shelf level, Cooking duration, CF Crisp function, Fan plus, Conventional heat, ✓ On, – Off

[1] Use a dark coloured, matt baking tin and place it centrally on the baking and roasting rack.

[2] Pre-heat the oven before putting food inside.

[3] Take the trays out of the oven early if the food is sufficiently browned before the specified cooking duration has elapsed.

Cooking charts

Shortcrust pastry

Cakes/biscuits (accessories)		[°C]			[min]	CF
Biscuits (1 tray)		140–150	–	2	25–35	–
		150–160	–	2	25–35	–
Biscuits (2 trays)		140–150	–	1+3	25–35[3]	–
Drop cookies (1 tray)		140	–	2	35–45	–
		160[2]	–	3	25–35	–
Drop cookies (2 trays)		140	–	1+3	40–50[3]	–
Flan base (baking and roasting rack, flan base tin, ∅ 28 cm)[1]		150–160	✓	2	35–45	–
		170–180[2]	✓	2	20–30	–
Cheesecake (baking and roasting rack, springform cake tin, ∅ 26 cm)[1]		170–180	–	2	80–90	–
		160–170	–	2	80–90	–
Apple pie (baking and roasting rack, springform cake tin, ∅ 20 cm)		160	–	2	90–100	–
		180	–	1	85–95	–
Apple pie, double crust (baking and roasting rack, springform cake tin, ∅ 26 cm)[1]		180–190[2]	–	2	60–70	✓
		160–170	–	2	60–70	✓
Fresh fruit cake, glazed (baking and roasting rack, springform cake tin, ∅ 26 cm)[1]		170–180	–	2	60–70	–
		150–160	–	2	55–65	–
Fresh fruit cake, glazed (1 tray)		170–180	–	2	50–60	✓
		160–170	–	2	45–55	✓
Fruit flan (1 tray)		210–220[2]	✓	1	45–55	✓
		190–200	–	2	40–50	✓

Operating mode, Temperature, Booster, Shelf level, Cooking duration, CF Crisp function, Fan plus, Eco Fan heat, Conventional heat, Intensive bake, ✓ On, – Off

[1] Use a dark coloured, matt baking tin and place it centrally on the baking and roasting rack.

[2] Pre-heat the oven before putting food inside.

[3] Take the trays out of the oven early if the food is sufficiently browned before the specified cooking duration has elapsed.

Yeast dough

Cakes/biscuits (accessories)		[°C]			[min]	CF
Bundt cake (baking and roasting rack, Bundt cake tin, ∅ 24 cm)[1]		150–160	–	2	50–60	–
		160–170	–	2	50–60	–
Stollen (1 tray)		150–160	–	2	55–65	–
		160–170	✓	2	55–65	–
Streusel cake with/without fruit (1 tray)		160–170	–	2	35–45	✓
		170–180	–	3	45–55	✓
Fresh fruit cake (1 tray)		160–170	✓	2	45–55	✓
		170–180	✓	3	45–55	✓
Apple turnovers/raisin whirls (1 tray)		160–170	✓	2	25–35	–
Apple turnovers/raisin whirls (2 trays)		160–170	✓	1+3	30–40[4]	–
White bread, free-form (1 tray)		190–200	✓	2	30–40[5]	–
		190–200	–	2	30–40	–
White bread (baking and roasting rack, loaf tin, 30 cm)[1]		180–190	✓	2	45–55	–
		190–200[2]	✓	2	55–65[6]	✓[7]
Wholegrain bread (baking and roasting rack, loaf tin, 30 cm)[1]		180–190	✓	2	55–65	–
		200–210[2]	✓	2	55–65[6]	✓[7]
Proving yeast dough (baking and roasting rack)		30–35	–	–[3]	–	–

Operating mode, Temperature, Booster, Shelf level, Cooking duration, CF Crisp function, Fan plus, Conventional heat, Moisture plus + Fan plus, Moisture plus + Conv. heat, ✓ On, – Off

[1] Use a dark coloured, matt baking tin and place it centrally on the baking and roasting rack.

[2] Pre-heat the oven before putting food inside.

[3] Place the baking and roasting rack on the floor of the oven and stand the bowl containing the dough on the rack. Depending on the size of the bowl, you may need to remove the side runners.

[4] Take the trays out of the oven early if the food is sufficiently browned before the specified cooking duration has elapsed.

[5] Release 1 burst of steam at the beginning of the cooking process.

[6] Release 2 bursts of steam at the beginning of the cooking process.

[7] Turn on the Crisp function 15 minutes into the cooking process.

Cooking charts

Quark dough

Cakes/biscuits (accessories)		[°C]			[min]	CF
Fresh fruit cake (1 tray)		160–170	✓	2	45–55	✓
		170–180	✓	3	45–55	✓
Apple turnovers/raisin whirls (1 tray)		160–170	–	3	25–35	✓
Apple turnovers/raisin whirls (2 trays)		150–160	✓	1+3	25–35[1]	✓

Operating mode, Temperature, Booster, Shelf level, Cooking duration, CF Crisp function, Fan plus, Conventional heat, ✓ On, – Off

[1] Take the trays out of the oven early if the food is sufficiently browned before the specified cooking duration has elapsed.

Sponge mixture

Cakes/biscuits (accessories)		[°C]			[min]	CF
Sponge cake base (2 eggs) (baking and roasting rack, springform cake tin, ∅ 26 cm)[1]		160–170[2]	–	2	15–25	–
Sponge cake base (4–6 eggs) (baking and roasting rack, springform cake tin, ∅ 26 cm)[1]		150–160[2]	–	2	30–40	–
Whisked sponge (baking and roasting rack, springform cake tin, ∅ 26 cm)[1]		180	–	2	25–35	–
		150–170[2]	–	2	25–45	–
Swiss roll sponge (1 tray)		180–190[2]	✓	1	15–25	–

Operating mode, Temperature, Booster, Shelf level, Cooking duration, CF Crisp function, Conventional heat, Fan plus, ✓ On, – Off

[1] Use a dark coloured, matt baking tin and place it centrally on the baking and roasting rack.

[2] Pre-heat the oven before putting food inside.

Choux pastry, puff pastry, meringue

Cakes/biscuits (accessories)		[°C]			[min]	CF
Choux buns (1 tray)		160–170	–	2	30–40	✓
		160–170	–	2	25–35[1]	✓[2]
Pastry puffs (1 tray)		180–190	–	2	20–30	–
Pastry puffs (2 trays)		180–190	–	1+3	20–30[3]	–
Macaroons (1 tray)		120–130	–	2	25–50	✓
Macaroons (2 trays)		120–130	–	1+3	25–50[3]	✓
Meringues/pavlovas (1 tray of 6, each ∅ 6 cm)		80–100	–	2	120–150	✓
Meringues/pavlovas (2 trays of 6, each ∅ 6 cm)		80–100	–	1+3	150–180	✓

Operating mode, Temperature, Booster, Shelf level, Cooking duration, CF Crisp function, Fan plus, Moisture plus + Fan plus, ✓ On, – Off

[1] Release 1 burst of steam 8 minutes into the cooking process.

[2] Turn on the Crisp function 15 minutes into the cooking process.

[3] Take the trays out of the oven early if the food is sufficiently browned before the specified cooking duration has elapsed.

Savoury dishes

Food (accessories)		[°C]			[min]	CF
Savoury flan (1 tray)		220–230[1]	✓	1	30–40	✓
		180–190	–	1	45–55	✓
Onion tart (1 tray)		180–190[1]	✓	2	25–35	✓
		170–180	–	2	30–40	✓
Pizza, yeast dough (1 tray)		170–180	✓	2	25–35	✓
		210–220[1]	–	2	20–30	✓
Pizza, quark dough (1 tray)		170–180	✓	2	25–35	✓
		190–200[1]	✓	3	25–35	✓
Frozen pizza, pre-cooked (baking and roasting rack)		200–210	–	2	20–25	–
Toast (baking and roasting rack)		300	–	3	5–8	–
Baked dishes/gratins (e.g. toast) (baking and roasting rack on universal tray)		275[2]	–	3	3–6	–
Grilled vegetables (baking and roasting rack on universal tray)		275[2]	–	4	5–10[3]	✓
		250[2]	–	3	5–10[3]	✓
Ratatouille (1 universal tray)		180–190	–	2	40–60	–

Operating mode, Temperature, Booster, Shelf level, Cooking duration, CF Crisp function, Conventional heat, Intensive bake, Fan plus, Eco Fan heat, Full grill, Fan grill, ✓ On, – Off

[1] Pre-heat the oven before putting food inside.

[2] Pre-heat the oven for 5 minutes before putting food inside.

[3] Turn the food halfway through cooking.

Beef

Food (accessories)		[°C]			[min]	[°C]
Braised beef, approx. 1 kg (oven dish with lid)	[2]	150–160[3]	✓	2	120–130[6]	–
	[2]	170–180[3]	✓	2	120–130[6]	–
		180–190	–	2	160–180[7]	–
Fillet of beef, approx. 1 kg (universal tray)	[2]	180–190[3]	✓	2	25–60	45–75
Fillet of beef (rare), approx. 1 kg[1]	[2]	80–85[4]	–	2	70–80	45–48
Fillet of beef (medium), approx. 1 kg[1]	[2]	90–95[4]	–	2	80–90	54–57
Fillet of beef (well done), approx. 1 kg[1]	[2]	95–100[4]	–	2	110–130	63–66
Sirloin joint, approx. 1 kg (universal tray)	[2]	180–190[3]	✓	2	35–65	45–75
Sirloin joint (rare), approx. 1 kg[1]	[2]	80–85[4]	–	2	80–90	45–48
Sirloin joint (medium), approx. 1 kg[1]	[2]	90–95[4]	–	2	110–120	54–57
Sirloin joint (well done), approx. 1 kg[1]	[2]	95–100[4]	–	2	130–140	63–66
Burgers, meat patties[1]		300[5]	–	4	15–25[8]	–

Operating mode, Temperature, Booster, Shelf level, Cooking duration, Core temperature, Auto roast, Conventional heat, Eco Fan heat, Full grill, ✓ On, – Off

[1] Use the baking and roasting rack and universal tray.

[2] Sear the meat on the hob first.

[3] Pre-heat the oven before putting food inside.

[4] Pre-heat the oven at 120 °C for 15 minutes. Reduce the temperature when you place the food in the oven.

[5] Pre-heat the oven for 5 minutes before putting food inside.

[6] Roast with the lid on to start with. Remove the lid 90 minutes into the cooking duration and add approx. 0.5 litres of liquid.

[7] Roast with the lid on to start with. Remove the lid 100 minutes into the cooking duration and add approx. 0.5 litres of liquid.

[8] Turn the food halfway through cooking.

Veal

Food (accessories)		[°C]			[min]	[°C]
Braised veal, approx. 1.5 kg (oven dish with lid)	[2]	160–170[3]	✓	2	120–130[5]	–
	[2]	170–180[3]	✓	2	120–130[5]	–
Fillet of veal, approx. 1 kg (universal tray)	[2]	160–170[3]	✓	2	30–60	45–75
Fillet of veal (pink), approx. 1 kg[1]	[2]	80–85[4]	–	2	50–60	45–48
Fillet of veal (medium), approx. 1 kg[1]	[2]	90–95[4]	–	2	80–90	54–57
Fillet of veal (well done), approx. 1 kg[1]	[2]	95–100[4]	–	2	90–100	63–66
Saddle of veal (pink), approx. 1 kg[1]	[2]	80–85[4]	–	2	80–90	45–48
Saddle of veal (medium), approx. 1 kg[1]	[2]	90–95[4]	–	2	100–130	54–57
Saddle of veal (well done), approx. 1 kg[1]	[2]	95–100[4]	–	2	130–140	63–66

Operating mode, Temperature, Booster, Shelf level, Cooking duration, Core temperature, Auto roast, Conventional heat, ✓ On, – Off

[1] Use the baking and roasting rack and universal tray.

[2] Sear the meat on the hob first.

[3] Pre-heat the oven before putting food inside.

[4] Pre-heat the oven at 120 °C for 15 minutes. Reduce the temperature when you place the food in the oven.

[5] Roast with the lid on to start with. Remove the lid 90 minutes into the cooking duration and add approx. 0.5 litres of liquid.

Lamb, game

Food (accessories)		[°C]			[min]	[°C]
Leg of lamb on the bone, approx. 1.5 kg (oven dish with lid)		170–180	–	2	100–120[4]	64–82
Saddle of lamb, off the bone (universal tray)	[1]	180–190[2]	✓	2	10–20	53–80
Saddle of lamb, off the bone (baking and roasting rack and universal tray)	[1]	95–105[3]	–	2	40–60	54–66
Saddle of venison, off the bone (universal tray)	[1]	160–170[2]	–	2	70–90	60–81
Roebuck saddle, off the bone (universal tray)	[1]	140–150[2]	–	2	25–35	60–81

Operating mode, Temperature, Booster, Shelf level, Cooking duration, Core temperature, Conventional heat, ✓ On, – Off

1 Sear the meat on the hob first.

2 Pre-heat the oven before putting food inside.

3 Pre-heat the oven at 120 °C for 15 minutes. Reduce the temperature when you place the food in the oven.

4 Roast with the lid on to start with. Remove the lid 50 minutes into the cooking duration and add approx. 0.5 litres of liquid.

Poultry, fish

Food (accessories)		[°C]			[min]	[°C]
Poultry, 0.8–1.5 kg (universal tray)		170–180	✓	2	55–65	85–90
Chicken, approx. 1.2 kg (baking and roasting rack on universal tray)		180–190[1]	–	2	60–70[3]	85–90
Poultry, approx. 2 kg (oven dish)		180–190	✓	2	100–120[4]	85–90
		190–200	✓	3	100–120[4]	85–90
Poultry, approx. 4 kg (oven dish)		160–170	✓	2	180–200[5]	90–95
		180–190	✓	2	180–200[5]	90–95
Fish, 200–300 g (e.g. trout) (universal tray)		210–220[2]	–	2	15–25[6]	75–80
Fish, 1–1.5 kg (e.g. salmon trout) (universal tray)		210–220[2]	–	2	30–40[6]	75–80
Fish fillet in foil, 200–300 g (universal tray)		200–210	–	2	25–30	75–80

Operating mode, Temperature, Booster, Shelf level, Cooking duration, Core temperature, Auto roast, Fan grill, Conventional heat, Moisture plus + Conv. heat, Eco Fan heat, ✓ On, – Off

[1] Pre-heat the oven for 5 minutes before putting food inside.

[2] Pre-heat the oven before putting food inside.

[3] Turn the food half way through grilling.

[4] Add approx. 0.25 litres of liquid at the start of the cooking process.

[5] Add approx. 0.5 litres of liquid after 30 minutes.

[6] Manually inject 1 burst of steam 5 minutes into the cooking process.

Copyrights and licences for the communication module

For the purpose of operating and controlling the communication module, Miele uses proprietary or third-party software that is not covered by open source licensing terms. These items of software/software components are protected by copyright. The copyrights held by Miele and third parties must be respected.

Furthermore, this communication module contains software components which are distributed under open source licence conditions. The open source components contained in the appliance along with the corresponding copyright notices, copies of the licensing terms valid at the time, and any further information can be accessed locally via IP using a web browser *(http://<IP address>/Licenses)*. The liability and warranty arrangements for the open source licences displayed in this location only apply in relation to the respective rights holders.

Miele in Saudi Arabia:
Awad Badi Nahas Trading Co. Ltd.
Medina Road, P.O. Box 11529
Jeddah 21463
Kingdom of Saudi Arabia
Tel. +966 12 2560888
Hotline for customer care 920003240
(Sat – Thu; 8 am – 5 pm)
Fax +966 12 2560555
E-mail: info@awadnahas.com
Website: www.awadnahas.com

Miele in United Arab Emirates:
Miele Appliances LLC
Showroom 1 Eiffel 1 Building
Sheikh Zayed Road, Umm Al Sheif
P.O. Box 114782 - Dubai
United Arab Emirates
Tel. +971 4 3044 999
Fax +971 4 3418 852
800-MIELE (64353)
E-mail: info@miele.ae
Website: www.miele.ae
Webshop: shop.miele.ae

Manufacturer: Miele & Cie. KG, Carl-Miele-Straße 29, 33332 Gütersloh, Germany

Miele

H 7464 BPX

en-AE

M.-Nr. 11 328 171 / 01