Operating and Installation Instructions
Oven



To prevent accidents and damage to the range, you **must** read all instructions supplied before installing or using the appliance.

en-US, CA

M.-Nr. 11 899 991

Contents

IMPORTANT SAFETY INSTRUCTIONS **5**

Overview **15**

Control panel **16**
On/Off button 17
Display 17
Sensor buttons 17
Symbols 19

Using the appliance **20**
Selecting a menu option 20
Changing a setting in a list 20
Changing the setting with a segment bar 20
Selecting an operating mode or function 20
Entering numbers 21
Activating MobileStart 21

Features **22**
Data plate 22
Scope of delivery 22
Standard and optional accessories 22
Safety features 26
PerfectClean treated surfaces 26
Self-Clean-ready accessories 26

Initial commissioning **27**
Miele@home 27
Basic settings 28
Heating the oven for the first time 29

Settings **30**
Settings overview 30
Opening the “Settings” menu 32
Language 32
Time 32
Lighting 32
Display 33
Volume 33
Units 33
Electrical version 33
Calibrate temperature 33
Booster 34
Recommended temps. 34
Self clean recommended 34
Cooling fan run-on 34

Contents

Safety 34
Miele@home 35
Performing Scan & Connect 36
Remote control 36
Activating MobileStart 36
RemoteUpdate 36
Software version 37
Showroom program 37
Factory default 37
Operating hours 37

Timer **38**

Main and submenus **39**

Energy-saving tips **40**

Operation **42**
Changing values and settings for a cooking program 42
Changing the temperature 42
Setting additional durations 43
Changing set durations 43
Deleting the set cooking durations 43
Canceling a cooking program 44
Preheating the oven compartment 44
Booster 44

Automatic programs **45**
Categories 45
Using automatic programs 45
Usage notes 45

Additional applications **46**
Defrost 46
Slow Roasting 47
Canning 49
Frozen food/ready meals 51
Warm-up Cookware 51

Baking **52**
Tips for baking 52
Notes on the operating modes 53

Contents

Roasting **54**
Tips for roasting 54
Notes on the operating modes 55

Broiling **56**
Tips for broiling 56
Notes on the operating modes 57

AirFry **58**
Accessories 58
Tips for AirFrying 58
Using the AirFry operating mode 58

Cleaning and care of the oven **60**
Unsuitable cleaning agents 60
Removing normal soiling 61
Removing stubborn soiling 61
Cleaning the oven compartment with Self clean 62
Removing the door 65
Installing the door 66
Removing the side runners with FlexiClip telescopic runners 66
Lowering the browning/broiling element 67

Frequently asked questions **68**

Customer Service **72**
Contact in the event of a fault 72
Appliance warranty and product registration 72
Availability of replacement parts, repair services and maintenance information 72

Caring for the environment **73**

Installation **74**
Installation dimensions 74
Installation in a tall or base cabinet (30" niche with trim kit EBA 7xxx) 74
Installation in a tall or base cabinet (24" niche) 75
Side view 76
Connections and ventilation 77
Installing and removing the oven 78
Taking the oven out of the housing unit 79
Electrical connection 80

Declaration of conformity **81**

Copyrights and licenses for the communication module **82**

When using the appliance, please comply with the basic safety requirements, including the following instructions:

Read all instructions before installation and use of the oven to prevent accidents and damage to the appliance.

This appliance complies with current safety requirements. Improper use of the appliance can lead to personal injury and material damage.

Read all instructions before installing or using the oven for the first time. Only use the appliance for its intended purpose.

Keep these operating instructions in a safe place and pass them on to any future user.

Appropriate use

▶ This oven is intended for domestic use and use in other similar environments.

▶ The oven is not intended for outdoor use.

▶ The oven is intended for cooking food – and, in particular, for baking, roasting, broiling, reheating, defrosting, and drying food – in domestic settings only.
All other types of use are not permitted.

▶ Risk of Fire! Do not use this oven to store or dry flammable materials.

▶ This oven can only be used by people with reduced physical, sensory, or mental capabilities or lack of experience and knowledge if they are supervised while using it.
They may only use it unsupervised if they have been shown how to do so in a safe manner. They must be able to understand and recognize the possible dangers caused by incorrect operation.

▶ The oven compartment is equipped with special bulbs to cope with particular conditions (e.g., temperature, moisture, chemical resistance, abrasion resistance, and vibration). These special bulbs must only be used for the purpose for which they are intended. They are not suitable for room lighting.

Safety with children

▶ Activate the system lock to ensure that children cannot switch on the oven inadvertently.

IMPORTANT SAFETY INSTRUCTIONS

▶ Children should be supervised in the vicinity of the oven. Never allow children to play with the oven.

▶ Burn Hazard - Do not allow children to use the oven. Failure to do so can result in severe burns or serious injury.

▶ Risk of suffocation from packaging material. While playing, children may become entangled in packaging material (such as plastic wrapping) or pull it over their head, presenting the risk of suffocation. Keep packaging material away from children.

▶ Risk of injury caused by hot surfaces. Children's skin is far more sensitive to high temperatures than that of adults. External parts of the oven such as the door glass, control panel, and the vent become quite hot.
Do not let children touch the oven when it is in operation.

▶ Risk of injury caused by hot surfaces. Children's skin is far more sensitive to high temperatures than that of adults. The oven gets much hotter during the Self Clean program than during normal use. Do not let children touch the oven during the Self Clean program.

▶ Risk of injury from the open door. The oven door can support a maximum weight of 33 lbs (15 kg). Children could injure themselves on an open door.
Do not let children sit on the door, lean against it, or swing on it.

Technical safety

▶ This appliance must be installed and connected in compliance with the installation instructions.

▶ Unauthorized installation, maintenance, and repairs can cause considerable danger for the user. Installation, maintenance, and repairs should only be carried out by a qualified specialist or Miele Service.

▶ Maintenance by the user: Never repair or replace any part of the appliance unless the instructions specifically recommend doing so. Service work should only be performed by a qualified technician.

▶ Damage to the oven can compromise your safety. Check the oven for visible signs of damage. Do not use a damaged oven.

▶ Temporary or permanent operation on an autonomous power supply system or a power supply system that is not synchronized with the grid power supply (e.g., island networks, back-up systems) is possible. A prerequisite for operation is that the power supply system complies with national and local codes.
The function and operation of the protective measures provided in the domestic electrical installation and in this Miele product must also be maintained in isolated operation or in operation that is not synchronized with the grid power supply, or these measures must be replaced by equivalent measures in the installation.

▶ The electrical safety of this appliance can only be guaranteed when correctly grounded. It is essential that this basic safety requirement is fulfilled. If in doubt, the electrical installation should be checked by a qualified electrician.

▶ Proper installation: Make sure that your appliance has been installed correctly and that it has been grounded by a qualified technician.

▶ The connection data (voltage and frequency) on the data plate of the oven must match the domestic electrical supply in order to avoid the risk of damage to the oven. Compare this before connecting the appliance to the domestic electrical supply. If in any doubt, consult a qualified electrician.

▶ Power bars and extension cords do not guarantee the required safety of the appliance. Do not use these to connect the oven to the power supply.

▶ For safety reasons, only use the oven when it has been fully installed.

▶ This appliance must not be used in a non-stationary location (e.g., on a ship).

▶ Risk of injury due to electric shock. Any contact with live connections or tampering with the electrical or mechanical components of the oven will endanger your safety and may lead to appliance malfunctions.
Do not open the oven housing under any circumstances.

▶ The manufacturer's warranty may be invalidated if the oven is not repaired by a qualified specialist or by Miele Service.

▶ If defective safety-relevant components are replaced, full compliance with safety requirements may only be guaranteed if genuine Miele replacement parts are used.

IMPORTANT SAFETY INSTRUCTIONS

▶ If the oven is delivered without a power cord, a special cord must be installed by a qualified specialist or Miele Service (see “Electrical connection” under “Installation”).

▶ If the power cord is damaged, it must be replaced with a special cord by a qualified specialist or Miele Service (see “Electrical connection” under “Installation”).

▶ During installation, maintenance, and repair work, e.g., if the oven interior lighting is faulty, the oven must be completely disconnected from the power supply (see “Frequently asked questions”). To ensure this:

- The circuit breakers have been switched off, or
- the fuses of the electrical installation have been completely removed, or
- the plug (if present) is removed from the outlet. To do this, pull the plug not the cord.

▶ The oven requires a sufficient supply of cool air for efficient operation. Make sure that the supply of cool air is not hindered in any way (e.g., by installing heat insulation strips in the cabinet niche). In addition, the required supply of cool air must not be excessively heated by other heat sources.

▶ If the oven is built in behind a cabinet door front, do not close the cabinet door while the oven is in use. Heat and moisture can build up behind the cabinet door when closed. This can result in damage to the oven, cabinet niche, and floor. Leave the cabinet door front open until the oven has cooled down completely.

Correct use

▶ Caution: Heating elements may be hot even though they are not glowing. Interior surfaces of an oven become hot enough to cause burns. External parts of the oven such as the door glass, vents, and the control panel can become hot. During and after use, do not touch, or let clothing or other flammable materials come into contact with heating elements or interior surfaces of the oven until they have had sufficient time to cool.

▶ Do not let food sit in the oven for an extended period of time before or after cooking. Doing so can result in food poisoning or sickness.

▶ Loose fitting or hanging garments present a fire hazard. Wear proper apparel while operating the appliance.

▶ Use only dry, heat-resistant potholders. Moist or damp potholders used on hot surfaces may result in steam burns. Do not let potholders come in contact with oil or grease. Do not substitute dish towels or other bulky items for potholders. Do not let potholders touch hot heating elements.

▶ Open the door carefully to allow hot air or steam to escape before placing or removing food.

▶ To prevent burns, always place oven racks at their desired height while the oven is cool. If the rack must be moved while the oven is hot, do not let pot holders touch hot heating elements.

▶ To prevent burns, allow the heating elements to cool before cleaning by hand.

▶ Smother the fire or flames, or use a dry chemical extinguishing agent or foam fire extinguisher.

▶ Never store flammable liquids and materials in, above or under an oven, or near cooking surfaces.

⚠ WARNING

NEVER use this appliance as a space heater to heat or warm the room. Doing so may result in carbon monoxide poisoning and overheating of the oven.

⚠ WARNING

NEVER use this appliance as storage space. Doing so may result in carbon monoxide poisoning and overheating of the oven.

⚠ WARNING

NEVER cover any slots, holes or openings in the oven bottom or cover an entire rack with materials such as aluminum foil. Doing so blocks air flow through the oven and may cause carbon monoxide poisoning. Aluminum foil linings may also trap heat, causing a fire hazard.

▶ Do not obstruct the flow of combustion and ventilation air.

▶ This oven must only be used for cooking food. Corrosive chemicals and vapors as well as fumes, vapors or heat given off by glues, plastics or flammable liquids and materials could be hazardous. Do not use it as a dryer, kiln, dehumidifier, etc.

IMPORTANT SAFETY INSTRUCTIONS

▶ Do not let metal objects (aluminum foil, pans) come in contact with the heating element.

▶ Make certain that the power cords of small appliances do not come in contact with or get caught in the oven door.

▶ When baking frozen pizzas or pies, place them on the wire rack lined with parchment paper. Do not use the baking tray or the roasting pan for frozen foods with a large surface area. The tray or pan could become warped and difficult to remove from the oven when hot. Frozen foods like french fries, chicken nuggets, etc. can be baked on the baking tray.

▶ Risk of injury caused by hot surfaces. The oven gets hot during operation. You could burn yourself on the heating elements, oven compartment, accessories, or food.
When the oven is hot, use pot holders to insert, remove, or turn food, as well as when adjusting the oven shelves, etc.

▶ To avoid fueling any flames, do not open the oven door if smoke appears inside the appliance. Interrupt the process by turning the appliance off and disconnecting it from the power. Do not open the door until the smoke has dissipated.

▶ Due to the high temperatures radiated, objects left near the oven could catch fire. Do not use the oven to heat up the room.

▶ Oils and fats are a fire hazard if allowed to overheat. Never leave the oven unattended when cooking with oil or fats. Never attempt to put out oil or fat fires with water. Turn the oven off and extinguish the flames by leaving the door closed.

▶ Broiling food for excessively long cooking durations can cause it to dry out with the risk of catching fire. Do not exceed the recommended cooking durations.

▶ Certain foods dry out quickly and may catch fire due to high broiling temperatures.
Never use broiling modes to finish baking par-cooked rolls or bread, or to dry flowers or herbs. Instead, use the Convection or Surround operating mode.

▶ If using alcohol in your recipes, please be aware that high temperatures can cause the alcohol to evaporate. The vapor can catch fire on hot heating elements.

▶ When using residual heat to keep food warm, corrosion from high air humidity and condensation can occur in the oven. This can cause damage to the control panel, countertop, and cabinet carcase. Keep the oven on and select the lowest temperature available for the selected operating mode. The cooling fan will then continue to run automatically.

▶ Food which is stored in the oven compartment or left in it to be kept warm can dry out and the moisture released can lead to corrosion damage in the oven. Always cover food that is left in the oven to keep warm.

▶ A buildup of heat can cause the enamel on the floor of the oven to crack or flake off.
Never line the floor of the oven with aluminum foil or oven liners.
If you wish to place dishware on the floor of the oven during the cooking process, or place dishware on the floor of the oven to heat it up, you can do so, but only with the Convection operating mode, without the Booster function.

▶ The oven floor can become damaged by items being pushed around on it. When placing pots, pans, or dishware on the oven floor, do not push them around.

▶ Risk of injury caused by steam. Pouring a cold liquid onto a hot surface creates steam, which can cause severe scalding. The sudden temperature change can also cause damage to hot surfaces. Never pour cold liquids directly onto hot enameled surfaces.

▶ Risk of injury caused by steam. During cooking processes with moisture injection and during the residual moisture evaporation process, steam is produced, which can lead to severe scalding. Never open the door when bursts of steam are being injected or while the residual water is being evaporated.

▶ It is important that the temperature in the food being cooked is evenly distributed and sufficiently high. You can ensure this by stirring or turning the food.

▶ Plastic containers which are not heat-resistant melt and may ignite at high temperatures and can damage the oven.
Use only plastic containers that are suitable for use in an oven. Follow the manufacturer's instructions.

▶ Canning food and heating it up in closed containers results in an increase in pressure which can cause them to explode. Do not use cans for canning or reheating food.

▶ Risk of injury from the open door. You could bang into the open door or trip over it. Do not leave the door open unnecessarily.

▶ The door can support a maximum load of 33 lbs (15 kg). Do not lean or sit on an open door, or place heavy items on it. Make sure that nothing gets trapped between the door and the oven compartment. This could damage the oven.

The following applies to stainless steel surfaces:

▶ Adhesives will damage the coated stainless steel surface and cause it to lose its dirt-repellent protective coating. Do not use sticky notes, adhesive tape, or other types of adhesive on the stainless steel surface.

▶ Magnets can cause scratches. Do not use the stainless steel surface as a magnetic notice board.

Cleaning and care

▶ Only clean parts listed in these operating and installation instructions.

▶ There is a delicate fiberglass seal around front of the oven compartment provide a seal for the glass on the inside of the oven door. This can be damaged by rubbing or scouring. If possible, refrain from cleaning this.

▶ Do not use oven cleaners. Do not use standard oven cleaners in the oven compartment or on the front of the oven. Never line the oven with oven liners.

▶ Risk of injury due to electric shock. The steam from a steam cleaning appliance could reach live electrical components and cause a short circuit. Never use a steam cleaner for cleaning.

▶ Scratches on the door glass can cause the glass to break. Do not use abrasive cleaners, hard sponges, brushes, or sharp metal tools to clean the door glass.

▶ The side runners can be removed (see “Cleaning and care of the oven – Removing the side runners with FlexiClip telescopic runners”). Reinstall the side runners correctly.

▶ Coarse soiling in the oven compartment can cause thick smoke to develop. Remove coarse soiling from the oven compartment before running the Self Clean program.

▶ Risk of injury caused by hazardous steam. During the Self Clean program, steam can be released.
During the Self Clean program, do not stay in the kitchen for longer periods of time and do not let children and pets enter the kitchen. It is important to ensure that the kitchen is well ventilated during the Self Clean program. Close doors to other rooms to prevent the odor spreading throughout the house.

▶ In warm, moist environments, there is a higher probability of pest infestations. Ensure the oven and the area surrounding it are always kept clean.
Damage caused by pests is not covered by the warranty.

Accessories

▶ Miele assumes no liability for the use of accessories that are not genuine Miele accessories. Miele may not be liable for warranty, guarantee, and/or product liability claims if damage or defects are due to the use or installation of accessories that do not originate from Miele or have not been approved by Miele.

▶ The Miele Gourmet Casserole Dish HUB 5000/HUB 5001 (if available) must not be inserted on shelf level 1. This will damage the floor of the oven. The lack of clearance will create a buildup of heat, which can cause the enamel to crack or flake off. Never place a Miele Casserole Dish on the upper support of shelf level 1 either as it will not be secured by the non-tip safety notches. As a general rule, use shelf level 2.

▶ Accessories that are not suitable for the Self Clean program will be damaged by the high temperatures. Remove all accessories that are not suitable for the Self Clean program from the oven compartment before starting the Self Clean process. This also applies to optional accessories that are not suitable for the Self Clean program (see “Cleaning and care of the oven”).

California Proposition 65

⚠ WARNING

This product can expose you to chemicals mineral oils[1], Nickel (Metallic)[1], Diisononyl phthalate (DINP)[1] and Di-isodecyl phthalate (DIDP)[2], which are known to the State of California to cause [1]cancer and [2]birth defects or [2]other reproductive harm.

For more information go to www.P65Warnings.ca.gov.

IMPORTANT SAFETY INSTRUCTIONS

KEEP THE OPERATING AND INSTALLATION INSTRUCTIONS IN A SAFE PLACE AND REVIEW THEM PERIODICALLY.

Oven

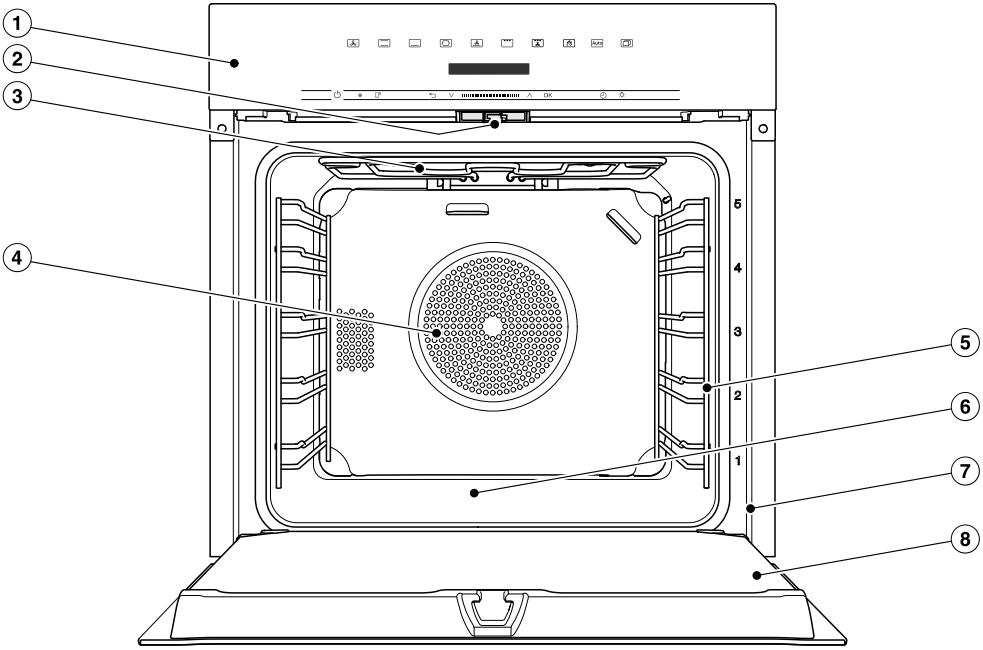

① Controls
② Door lock
③ Browning/Broiling element
④ Convection fan with heating element
⑤ Side runners with 5 shelf levels
⑥ Oven floor with bottom heat element underneath it
⑦ Front frame with data plate
⑧ Door

Control panel

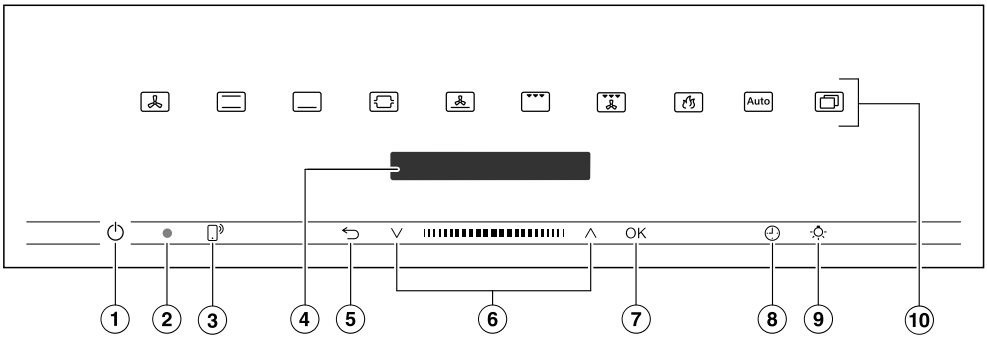

① Recessed ⏻ On/Off button
For turning the oven on and off

② Optical interface
(for Miele Service only)

③ sensor button
For controlling the oven via your mobile device

④ Display
For displaying the time of day and information on operation

⑤ ⮌ sensor button
For going back a step and for canceling a cooking program

⑥ Navigation area with ∧ and ∨ arrow buttons
For scrolling through lists and for changing values

⑦ *OK* sensor button
For accessing functions and saving settings

⑧ sensor button
For setting a timer, the cooking duration, or the start or finish time for the cooking program

⑨ sensor button
For switching the oven interior lighting on and off

⑩ Sensor buttons
For selecting operating modes, automatic programs, and settings

On/Off button

The ⏻ On/Off button is recessed and reacts to touch.

Use this button to turn the oven on and off.

Display

The display is used for showing the time of day or information about operating modes, temperatures, cooking durations, automatic programs, and settings.

After turning the oven on with the ⏻ On/Off button, Select operating mode will appear in the main menu.

Sensor buttons

The sensor buttons react to touch. Every tap of a sensor button is confirmed with an audible keypad tone. You can turn this keypad tone off using More ▣ | Settings | Volume | Keypad tone.

If you want the sensor buttons to respond even when the oven is turned off, select the Display | QuickTouch | On setting.

Sensor buttons above the display

For information on the functions and operating modes, see “Main and submenus”, “Settings”, “Automatic programs”, and “Further applications”.

Control panel

Sensor buttons under the display

Sensor control	Function
	If you want to control the oven from your mobile device, you must have the Miele@home system, turn on the Remote control setting, and tap this sensor button. The sensor button then lights up and the MobileStart function is available. As long as this sensor button is illuminated, you can control the oven via your mobile device (see “Settings – Miele@home”).
	Depending on which menu you are in, this sensor button will take you back a level or back to the main menu. If a cooking program is in progress at the same time, use this sensor button to cancel the program.
	In the navigation area, use the arrow buttons or the area between them to scroll up or down in the lists. The display shows the menu option that you want to select. You can change the values and settings using the arrow buttons or the area between them.
OK	As soon as you reach a confirmable value, message, or setting, the *OK* sensor button will light up orange. By selecting this sensor button you can access functions such as the timer, save changes to values or settings, or confirm instructions.
	If no cooking program is in progress, you can use this sensor button to set a timer (e.g., when boiling eggs) at any point. If a cooking program is in progress at the same time, you can set a timer, the cooking duration, and a start or end time for the program.
	Select this sensor button to turn the oven interior lighting on and off. Depending on the setting selected, the oven interior lighting turns off after 15 seconds or remains constantly turned on or off.

Symbols

The following symbols may appear on the display:

Symbol	Meaning
i	This symbol indicates that there is additional information and advice about using the appliance. Select *OK* to confirm the information.
🔔	Timer
✓	A check indicates the option which is currently selected.
■■■■□□□	Some settings, e.g., display brightness and signal tone volume, are selected using a segment bar.
🔒	The system lock prevents the oven being switched on by mistake (see “Settings – Safety”).

Use the ∧ and ∨ arrow buttons or the area between them in the navigation area to use the oven.

As soon as you reach a confirmable value, message, or setting, the *OK* sensor control will light up orange.

Selecting a menu option

- Touch the ∧ or ∨ arrow buttons or swipe to the right or left in the area until you reach the desired menu option.

Tip: If you press and hold an arrow button, the list continues scrolling automatically until you release the arrow button.

- Confirm your selection with *OK*.

Changing a setting in a list

A ✓ check will appear beside the current setting.

- Touch the ∧ or ∨ arrow buttons or swipe to the right or left in the area until you reach the desired value or setting.
- Confirm with *OK*.

The setting is now saved. This will take you back to the previous menu.

Changing the setting with a segment bar

Some settings are represented by a bar made up of segments. If all of the segments are illuminated, the maximum value is selected.

If none of the segments are illuminated or if only one is, the minimum value is selected or the setting is turned off altogether (e.g., volume).

- Touch the ∧ or ∨ arrow buttons or swipe to the right or left in the area until you reach the desired setting.
- Confirm your selection with *OK*.

The setting is now saved. This will take you back to the previous menu.

Selecting an operating mode or function

The sensor buttons for the operating modes and functions (e.g., More) are located above the display (see “Controls” and “Settings”).

- Touch the sensor button for the desired operating mode or function.

The sensor button on the control panel lights up orange.

- For operating modes and functions: set values such as the temperature.
- Under More: scroll through the lists until you reach the desired menu option.
- Confirm with *OK*.

Changing the operating mode

You can change to another operating mode during a cooking program.

The sensor button for the previously selected function lights up orange.

- Touch the sensor button of the new operating mode or function.

The new operating mode will appear on the display with its corresponding recommended values.

The sensor button for the new operating mode lights up orange.

Under More, scroll through the lists until you reach the desired menu option.

Entering numbers

Numbers that can be changed are highlighted.

- Touch the ∧ or ∨ arrow buttons or swipe to the right or left in the area until the desired number is highlighted.

Tip: If you press and hold an arrow button, the numbers continue scrolling automatically until you release the arrow button.

- Confirm with *OK*.

The changed number is now saved. This will take you back to the previous menu.

Activating MobileStart

- Select the sensor button to activate MobileStart.

The sensor button lights up. You can operate your oven remotely with the Miele app.

Directly operating on the oven takes priority over operating it via the remote control function on the app.

You can use MobileStart as long as the sensor button is lit up.

A list of the models described in these operating and installation instructions can be found on the back page.

Data plate

The data plate located on the front frame of the oven is visible when the door is open.

The data plate states the model number, the serial number, and connection data (voltage, frequency, and maximum rated load).

Have this information available if you need to contact Miele so that any issues can be rectified as quickly as possible.

Scope of delivery

- Operating and installation instructions for using the oven
- Screws for securing the oven to the cabinet niche
- Various accessories

Standard and optional accessories

Features will vary depending on model.

The side runners, universal tray, and wire rack (or “rack” for short) are supplied as standard with the oven.

Depending on the model, your oven may also come supplied with some of the accessories listed here.

All accessories and cleaning agents and care products in these instructions are designed to be used with Miele Ovens.

These can be ordered from the Miele web store, Miele Customer Service, or from your Miele dealer.

When ordering, please have the model identifier of your oven ready along with the desired accessories.

Side runners

Side runners for accessories are installed on either side of the oven compartment for shelf levels 5 1.

The shelf level numbers are indicated on the front of the oven frame.

Each level consists of 2 rails, one above the other.

The accessories (e.g., the wire rack) are pushed into the oven between the two rails.

The FlexiClip telescopic runners (if present) are installed on the lower rail.

You can remove the side runners (see “Cleaning and care of the oven – Removing the side runners with FlexiClip telescopic runners”).

Baking tray, universal tray, and wire rack with non-tip safety notches

Baking tray HBB 71:

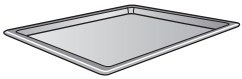

Universal tray HUBB 71:

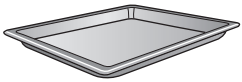

Wire rack HBBR 72:



These accessories are inserted into the oven between the two rails of a side runner.

Always position the wire rack with the loading surface in the lower position.

These accessories have non-tip safety notches installed in the middle of their short sides. These prevent the trays from being pulled out completely from the side runners when you only wish to pull accessories out partially.



If you are using the universal tray with the wire rack on top, insert the tray between the rails of the side runners and the rack will automatically slide in above them.

FlexiClip telescopic runners HFC 72

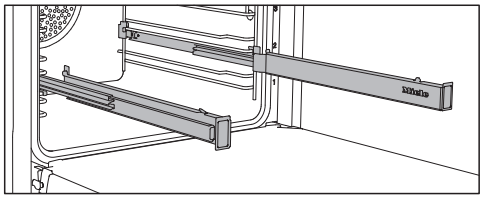

You can use the FlexiClip telescopic runners on shelf levels 1–4.

Push the FlexiClip telescopic runners all the way into the oven before placing accessories on them.

The accessories will then automatically sit securely in between the stoppers at either end of each runner and be prevented from sliding off.

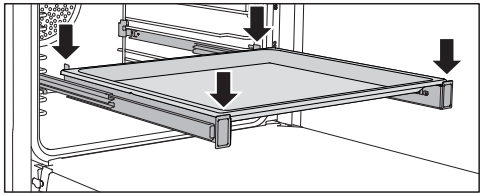

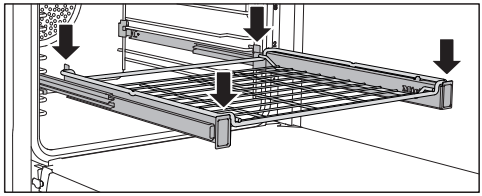

The FlexiClip telescopic runners can support a maximum load of 33 lb (15 kg).

Installing and removing the FlexiClip telescopic runners

⚠ Risk of injury caused by hot surfaces.
The oven gets hot during operation. You could burn yourself on the heating elements, oven compartment, or accessories.
Allow the heating elements, oven compartment, and the accessories to cool down before installing or removing the FlexiClip telescopic runners.

The FlexiClip telescopic runners are installed in between the two rails that make up a shelf level.

The FlexiClip telescopic runner with the Miele logo is installed on the right.

When installing or removing the FlexiClip telescopic runners, do **not** extend them.

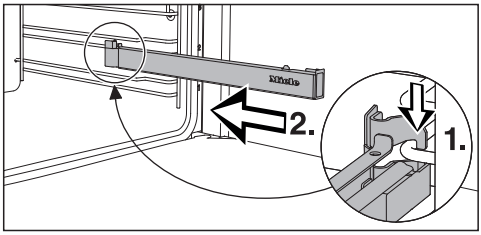

- Hook the FlexiClip telescopic runner onto the lower rail of a shelf level at the front (1.) and push it along the rail into the oven compartment (2.).

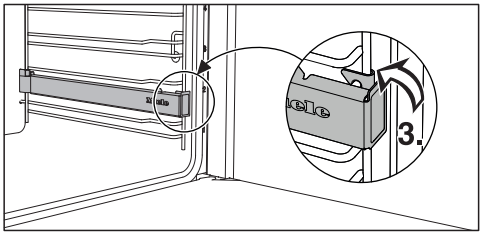

- Then secure the FlexiClip telescopic runner to the lower rail of the shelf level (3.).

If the FlexiClip telescopic runners are difficult to pull out after installing, you may need to pull firmly on them once to release them.

To remove a FlexiClip telescopic runner, proceed as follows:

- Push the FlexiClip telescopic runner in all the way.

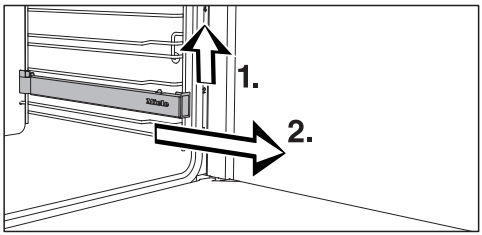

- Remove the FlexiClip telescopic runner by raising it at the front (1.) and then pulling it forwards along the rail of the shelf level and out (2.).

Round baking pans



The **solid round baking pan HBF 27-1** is suitable for cooking pizzas, flat cakes made with yeast, or whisked mixtures, sweet and savory tarts, baked desserts, flat bread, and can also be used for frozen cakes and pizzas.

The **perforated round baking and AirFry pan HBFP 27-1** can be used for the same purposes as the **perforated Gourmet baking and AirFry tray HBBL 71**.

The enameled surface of both bakeware pans has been treated with PerfectClean.

■ Insert the wire rack and place the round baking pan on the wire rack.

Gourmet baking and AirFry tray, perforated HBBL 71



The fine perforations of the Gourmet baking and AirFry tray optimize cooking processes:

- Browning on the underside of baked goods made from fresh yeast and quark doughs as well as bread and rolls is improved.
  Roll out the dough on a level surface first and then place it on the perforated Gourmet baking and AirFry tray.
- French fries, croquettes, or similar items can be fried in a low-fat air flow (AirFrying).
- During dehydrating/drying, the air circulation around the food for drying is optimized.

The enameled surface has been treated with PerfectClean.

The **round perforated baking and AirFry tray HBFP 27-1** can be used for the same purposes.

Grilling and roasting insert HGBB 71

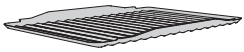

The grilling and roasting insert fits in the universal tray.
When broiling, roasting, or AirFrying, the tray will collect meat juices and stop them from burning so that they can be used for making gravy and sauces.

The enameled surface has been treated with PerfectClean.

Gourmet Casserole Dishes HUB Casserole dish lids HBD

Unlike other roasting dishes, the Miele Gourmet Casserole Dishes can be placed in the oven directly on the side runners. They have non-tip safety notches like the wire rack to prevent them from being pulled out too far.
The surface of the casserole dishes has a non-stick coating.

Gourmet Casserole Dishes are available in different depths. The width and the height are the same.

Suitable lids are available separately. Please quote the model number when ordering.

Depth:
8 1/2" (22 cm)

HUB 5000-M
HUB 5001-M*

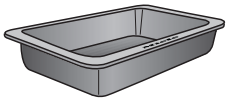

HBD 60-22

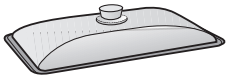

Depth:
13 3/4" (35 cm)

HUB 5001-XL*

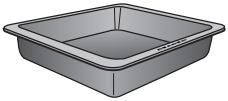

HBD 60-35

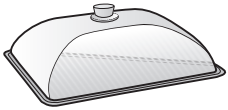

*Suitable for induction cooktops

Safety features

- **System lock** 🔒
  (see “Settings – Safety”)
- **Sensor lock**
  (see “Settings – Safety”)
- **Cooling fan**
  (see “Settings – Cooling fan run-on”)
- **Safety shut-off**
  This safety shut-off is activated automatically if the oven has been operating for an unusually long period of time. The period of time will depend on the particular operating mode being used.
- **Ventilated door**
  The oven door is made of glass panes that have a heat-reflective coating on part of their surface. When the oven is operating, air is passed through the door to keep the outer pane cool. You can remove the door for cleaning purposes (see “Cleaning and care of the oven”).
- **Door locking** for Self Clean
  At the beginning of a Self Clean program, the door will lock for safety reasons. The door will only unlock when the temperature in the oven compartment has dropped to below 535°F (280°C).

PerfectClean treated surfaces

PerfectClean surfaces have very good non-stick properties making them exceptionally easy to clean.

Food can be easily removed from these surfaces. Soiling from baking and roasting can also be easily removed from these surfaces.

However, do not use ceramic knives as these will scratch the PerfectClean surface.

Read the instructions in “Cleaning and care of the oven” to retain the benefits of the non-stick properties and easy cleaning.

PerfectClean treated surfaces:

- Universal tray
- Baking tray
- Broiling and roasting insert
- Gourmet baking and AirFry tray, perforated
- Round perforated baking and AirFry tray
- Round baking pan

Self-Clean-ready accessories

See “Cleaning and care of the oven” for more information.

The following accessories can be left in the oven compartment during the Self Clean program:

- Side runners
- FlexiClip telescopic runners HFC 72
- Wire rack

Miele@home

Your oven is equipped with an integrated WiFi module.

To use this feature, you will need:

- A WiFi network
- The Miele app
- A Miele user account. You can create a user account via the Miele app.

The Miele app will guide you as you connect your oven to your home WiFi network.

Once your oven is connected to your WiFi network, you can use the app to carry out various activities, such as:

- Call up information on the operating status of your oven
- Retrieve information on cooking processes that are in progress
- Stop cooking programs that are in progress

Connecting your oven to your WiFi network will increase energy consumption, even when the oven is turned off.

Make sure that the signal of your WiFi network is sufficiently strong in the place where your oven is installed.

Availability of the Wi-Fi connection

The Wi-Fi connection shares a frequency range with other appliances (including microwave ovens and remote control toys). This can cause sporadic or even complete connection failures. Therefore, the availability of featured functions cannot be guaranteed.

Miele@home availability

The ability to use the Miele app depends on the availability of the Miele@home service in your country.

The Miele@home service is not available in every country.

For information about availability, please visit www.miele.com.

Miele App

The Miele App is available to download free of charge from the Apple App Store® or from the Google Play Store™.

Download on the App Store

ANDROID APP ON Google Play

Basic settings

You must make the following settings before starting up for the first time. You can change these settings again at a later time (see “Settings”).

⚠ Risk of injury caused by hot surfaces.
The oven gets hot during operation.
For safety reasons, only use the oven when it has been fully installed.

The oven will turn on automatically when it is connected to the electrical supply.

Setting the language

- Select the desired language.

If you have accidentally selected a language that you don’t understand, proceed as described in “Settings – Language ⚑”.

Setting the location

- Select the required location.

Setting up Miele@home

Set up “Miele@home” will appear on the display.

- To set up Miele@home now, confirm by touching *OK*.
- To set it up at a later date, select Skip and confirm with *OK*.
  See “Settings – Miele@home” for information on setting up at a later date.
- To set up Miele@home immediately, select the connection method you want to use.

You will then be guided by the display and the Miele app.

Setting the time

- Set the time of day in hours and minutes.
- Confirm with *OK*.

Setting the voltage

⚠ The set voltage variant must match the voltage of the domestic electrical supply in order to avoid the risk of damage to the oven.
Confirm the voltage before setting. If in any doubt, consult a qualified electrician.

- Select the voltage variant.
- Confirm with *OK*.

Completing the commissioning process

- Follow any further instructions on the display.

The appliance is now ready for use.

Heating the oven for the first time

New ovens may have a slight odor during their first use. Heating up the oven for at least an hour with nothing in it will eliminate the odor.

Ensure that the kitchen is well ventilated while the appliance is being heated up for the first time.
Close doors to other rooms to prevent the odor spreading throughout the house.

- Remove any adhesive labels or protective films from the ovens and accessories.
- Before heating the oven up, wipe the interior with a damp cloth to remove any dust or bits of packaging.
- Insert the FlexiClip telescopic runners (if available) into the side racks and insert all trays and the wire rack.
- Turn the oven on using the ⏻ On/Off button.

Select operating mode appears.

- Select Convection [fan].

350°F (160°C) will appear as a recommended value.

The oven heating, lighting, and cooling fan will turn on.

- Set the highest possible temperature.
- Confirm with *OK*.

Heat up the oven for at least an hour.

- After at least an hour, turn the oven off with the ⏻ On/Off button.

Cleaning the oven compartment after heating it up for the first time

⚠ Risk of injury caused by hot surfaces.
The oven gets hot during operation. You could burn yourself on the heating elements, oven compartment, or accessories.
Allow the heating elements, oven compartment, and accessories to cool before manual cleaning.

- Take all accessories out of the oven compartment and clean it by hand (see “Cleaning and care of the oven”).
- Clean the oven compartment with warm water and liquid dish soap, applied with a soft sponge or microfiber cloth.
- Dry all surfaces with a soft cloth.

Leave the oven door open until the oven compartment is completely dry.

Settings

Settings overview

Menu option	Available settings
Language ⚑	... | deutsch | english | ... Location
Time	Display On | Off* | Night dimming Clock format 12 h* | 24 h Set
Lighting	On "On" for 15 seconds* Off
Display	Brightness ■■■■□□□ QuickTouch On | Off*
Volume	Buzzer tones Melodies* ■■■■□□□ Solo Tone ■■■■■■■□□□□□□ Keypad tone ■■■■□□□ Welcome Melody On* | Off
Units	Temperature °C | °F*
Electrical version	208V / 60Hz 220V / 60Hz 240V / 60Hz
Calibrate temperature	■■■■□□□
Booster	On* | Off
Recommended temps.	
Self clean recommended	On* | Off
Cooling fan run-on	Temperature controlled* Time controlled

* Factory default

Menu option	Available settings
Safety	Sensor lock On | Off* System lock 🔒 On | Off*
Miele@home	Activate | Deactivate Connection status Set up again Reset Set up
Remote control	On* Off
RemoteUpdate	On* Off
Software version	
Showroom program	Demo Mode On | Off*
Factory default	Appliance settings Recommended temps.

* Factory default

Opening the “Settings” menu

In the More | Settings menu, you can personalize your oven by adapting the factory default settings to suit your requirements.

- Select More.
- Select Settings.
- Select the setting you want.

You can check settings or change them.

You cannot change settings while a cooking process is in progress.

Language

You can set your language and location.

After selecting and confirming your choice, the language you have selected will appear on the display.

Tip: If you have selected the wrong language by mistake, select the sensor button. Follow the symbol to get back to the Language submenu.

Time

Display

Select how you want the time of day to show on the display when the oven is turned off:

- On
  The time of day is always visible on the display. This setting increases energy consumption.
  If you also select the Display | QuickTouch | On setting, all sensor buttons will react to touch straight away.
  If you also select the Display | QuickTouch | Off setting, the oven has to be turned on before it can be used.
- Off
  The display appears dark to save energy. The oven has to be turned on before you can use it.
- Night dimming
  The time of day only shows on the display between 5:00 am and 11:00 pm. The display remains dark at all other times. This setting increases energy consumption.

Clock format

The time of day can be displayed in the 24 or 12-hour format (24 h or 12 h).

Set

Set the hours and the minutes.

If there is a power failure, the current time of day will reappear once the power has been restored. The time of day is saved for approx. 150 hours.

If the oven has been connected to a WiFi network and signed into the Miele app, the time will be synchronized based on the location setting in the Miele app.

Lighting

- On
  The oven interior lighting is turned on during the entire cooking period.
- “On” for 15 seconds
  The oven interior lighting turns off 15 seconds after a cooking program has begun. Press the sensor button to turn the oven interior lighting on again for 15 seconds.
- Off
  The oven interior lighting is turned off. Press the sensor button to turn the oven interior lighting on for 15 seconds.

Display

Brightness

The display brightness is represented by a segment bar.

- ■■■■■■■
  Maximum brightness
- ■⊏=====⊐
  Minimum brightness

QuickTouch

Select how the sensor buttons should respond when the oven is turned off:

- On
  If you have also selected the Time | Display | On or Night dimming setting, the sensor button will also respond when the oven is turned off. This setting increases energy consumption.
- Off
  Regardless of the Time | Display setting, the sensor buttons only respond when the oven is turned on, as well as for a certain amount of time after turning it off.

Volume

Buzzer tones

If audible signals are turned on, an audible signal will sound when the set temperature is reached and at the end of a set time.

Melodies

At the end of a process, a melody will sound several times at intervals.

The volume of the melody is represented by a segment bar.

- ■■■■■■■
  Maximum volume
- ⊏=====⊐
  Melody is turned off

Solo Tone

At the end of a process, a continuous tone will sound for a period of time.

The pitch of this continuous tone is represented by a segment bar.

- ■■■■■■■■■■■■■
  Maximum pitch
- ⊏==========⊐
  Minimum pitch

Keypad tone

The volume of the tone that sounds each time you tap a sensor button is represented by a segment bar.

- ■■■■■■■
  Maximum volume
- ⊏=====⊐
  Keypad tone is turned off

Welcome Melody

The melody that sounds when you tap the ⏻ On/Off button can be turned on or off.

Units

Temperature

You can set the temperature in Celsius (°C) or Fahrenheit (°F).

Electrical version

You can set the voltage variant. The setting must correspond to the voltage of your domestic electrical supply.

Calibrate temperature

You can change the temperature in increments in all operating modes and automatic programs so that it is higher or lower in the oven compartment than displayed.

The temperature calibration is represented by a bar with seven segments.



If all of the segments are filled, the oven compartment temperature is much higher than displayed. If one segment is filled, the oven compartment temperature is much lower than displayed.

Booster

The Booster function is used to quickly preheat the oven.

- On
  The Booster function is automatically turned on during the preheating phase of a cooking program. The browning/ broiling element, ring heating element, and blower all preheat the oven compartment to the set temperature at the same time.
- Off
  The Booster function is turned off during the preheating phase of a cooking program. Only the heating elements for the selected operating mode are used to preheat the oven compartment.

Recommended temps.

If you often cook with temperatures that differ from the default, the recommended temperatures can be changed.

After selecting this menu option, the list of operating modes will appear in the display together with their recommended temperatures.

- Select the operating mode you want to use.
- Change the recommended temperature.
- Confirm with *OK*.

Self clean recommended

You can set whether the recommendation for carrying out the Self Clean function will appear (On) or will not appear (Off).

Cooling fan run-on

The cooling fan will continue to run for a while after the oven has been turned off to prevent any humidity building up in the oven, on the control panel, or in the cabinet carcase.

- Temperature controlled
  The cooling fan turns off when the temperature in the oven drops below approx. 160°F (70°C).
- Time controlled
  The cooling fan turns off after a period of about 25 minutes.

Condensation can damage the cabinet carcase and the countertop. This could lead to corrosion of the oven.

When keeping food warm in the oven, increases to the Time controlled setting can lead to condensation in the control panel and moisture on the countertop and cabinet doors.

Do not adjust the Time controlled setting and try not to leave food in the warm oven.

Safety

Sensor lock

The sensor lock prevents the cooking program from being turned off by mistake or settings from being changed. Once activated, the sensor lock prevents the sensor buttons and fields on the display from working for a few

seconds after a program has been started, with the exception of the ⏻ On/Off button.

- On
  The sensor lock is active. Touch *OK* sensor button for at least 6 seconds to deactivate the sensor lock for a short period of time.
- Off
  The sensor lock is not active. All sensor buttons react to touch as normal.

System lock

The system lock prevents the oven from being turned on inadvertently.

You can still set a timer as well as use the MobileStart function when the system lock is active.

The system lock will remain activated even after a power failure.

- On
  The system lock is now active. Before you can use the oven, touch the *OK* sensor control for at least 6 seconds.
- Off
  The system lock is now deactivated. You can use the oven as normal.

Miele@home

The oven is a Miele@home-compatible domestic appliance. Your oven is equipped ex-works with a WiFi communication module and is suitable for wireless communication.

There are a number of ways of connecting your oven to your WiFi network. We recommend connecting your oven to your WiFi network with the help of the Miele app or via WPS.

- Activate
  This setting is only visible if Miele@home is deactivated. The WiFi function is reactivated.
- Deactivate
  This setting is only visible if Miele@home is activated. Miele@home remains set up; the WiFi function is turned off.
- Connection status
  This setting is only visible if Miele@home is activated. The display shows information such as the WiFi reception quality, network name, and IP address.
- Set up again
  This setting is only visible if a WiFi network has already been set up. Reset the network settings and set up a new network connection straight away.
- Reset
  This setting is only visible if a WiFi network has already been set up. The WiFi function is deactivated and the connection to the WiFi network will be reset to the factory default. You must set up a new connection to the WiFi network to be able to use Miele@home.
  Reset the network settings if you are disposing of or selling your oven, or if you are putting a used oven into operation. This is the only way to ensure that all personal data has been removed and the previous owner will no longer be able to access the oven.
- Set up
  This setting is only visible if no connection to the WiFi network has been set up yet. You must set up a new connection to the WiFi network to be able to use Miele@home.

Performing Scan & Connect

Initial commissioning has been carried out without Miele@home having been set up.

- Scan the QR code.

If you have installed the Miele app and have a user account, you will be taken directly to the networking steps.

If you have not yet installed the Miele app, you will be taken to the Apple App Store® or the Google Play Store™.

- Install the Miele app and set up a user account.
- Scan the QR code again.

The Miele app will guide you through the setup process.

Remote control

If you have installed the Miele app on your mobile device, have access to the Miele@home system, and have activated the remote control function (On), you can use the MobileStart function to retrieve information on oven cooking programs that are in progress or to end a program in progress.

Activating MobileStart

- Select the sensor button to activate MobileStart.

The sensor button lights up. You can operate your oven remotely with the Miele app.

Directly operating on the oven takes priority over operating it via the remote control function on the app.

You can use MobileStart as long as the sensor button is lit up.

RemoteUpdate

The RemoteUpdate menu option is only displayed and can only be selected if the requirements for using Miele@home have been met (see “Before first use – Miele@home”).

The RemoteUpdate function is used for updating the software in your oven. If an update is available for your oven, it will automatically download it. Updates will not be installed automatically. They must be initiated manually.

If you do not install an update, you can continue to use your oven as usual. However, Miele recommends installing updates.

Activating/deactivating

The RemoteUpdate function is activated as standard. Available updates will be downloaded automatically but will only be installed if you initiate installation manually.

Deactivate RemoteUpdate if you do not want any updates to be downloaded automatically.

Running a RemoteUpdate

Information about the content and scope of an update is provided in the Miele app.

A message will appear on your oven display if a software update is available.

You can install the update immediately or postpone this until later. When the oven is turned on again, you will be reminded about the update.

Deactivate RemoteUpdate if you do not want to install the update.

The update may take several minutes.

Please note the following information about the RemoteUpdate function:

- You will only receive a message when an update is available.
- Once an update has been installed, it cannot be undone.
- Do not turn the oven off during the update. Otherwise, the update will be aborted and will not be installed.
- Some software updates can only be carried out by Miele Customer Service.

Software version

The software version menu option is for use by Miele Customer Service. You do not need this information for domestic use.

Showroom program

This function enables the oven to be demonstrated in dealer showrooms without heating up. Do not activate this setting for domestic use.

Demo Mode

If you have Demo mode activated, Demo mode is active. The appliance will not heat up will appear when you turn on the oven.

- On
  Touch the *OK* sensor button for at least 4 seconds to activate Demo mode.
- Off
  Touch the *OK* sensor button for at least 4 seconds to deactivate Demo mode. You can use the oven as normal.

Factory default

- Appliance settings
  Any settings that have been altered will be reset to the factory default settings.
- Recommended temps.
  Any recommended temperatures that have been changed will be reset to the factory default settings.

Operating hours

Select More | Operating hours to query the total number of operating hours of your oven.

Using the Timer function

The 🔔 timer can be used to time other activities in the kitchen, e.g., boiling eggs.

The timer can also be used at the same time as a cooking program for which the start and finish times have been set (e.g., as a reminder to stir the food or add seasoning, etc.).

- The maximum timer duration that can be set is 59 minutes and 59 seconds.

Tip: When using an operating mode with moisture injection, use the timer to remind you to inject steam manually at the required time.

Setting the timer

If you have selected the Display | QuickTouch | Off setting, you will need to turn the oven on before setting the timer. The timer can then be seen counting down on the display when the oven is turned off.

Example: You want to boil some eggs and set a timer of 6 minutes and 20 seconds.

- Select the 🕘 sensor button.
- Select Timer if a cooking program is in progress at the same time.

The prompt Set 00:00 min will appear.

- Using the navigation area, set 06:20.
- Confirm with *OK*.

The timer duration is now saved.

When the oven is turned off, the timer duration counts down on the display and 🔔 appears instead of the time of day.

If you are cooking at the same time **without** a set cooking duration, 🔔 and the timer time will appear as soon as the selected temperature is reached.

If you are cooking at the same time **with** a set cooking duration, the timer will count down in the background as the cooking duration takes priority in the display.

If you are in a menu, the timer will count down in the background.

At the end of the timer duration, 🔔 will flash, the time will start counting up, and an audible signal will sound.

- Select the 🕘 sensor button.
- If required, confirm with *OK*.

The audible signal will stop and the symbols on the display will go out.

Changing the timer

- Select the 🕘 sensor button.
- Select Timer if a cooking program is in progress at the same time.
- Select Change.
- Confirm with *OK*.

The timer appears.

- Change the time set for the timer.
- Confirm with *OK*.

The altered timer time is now saved.

Deleting the timer

- Select the 🕘 sensor button.
- Select Timer if a cooking program is in progress at the same time.
- Select Delete.
- Confirm with *OK*.

The timer is deleted.

As different countries have different preferences when it comes to preparing food, the temperatures in °F and °C may not match. The temperatures are defined as they are specified in the table.

Menu	Recommended temp.	Range
Operating Modes		
Convection	350°F (160°C)	85–475°F (30–250°C)
Surround	400°F (180°C)	85–525°F (30–280°C)
Bake	375°F (190°C)	200–525°F (100–280°C)
Auto Roast	375°F (160°C)	200–450°F (100–230°C)
Intensive	400°F (170°C)	125–475°F (50–250°C)
Maxi Broil	500°F (240°C)	400–575°F (200–300°C)
Convection Broil	400°F (200°C)	200–500°F (100–260°C)
Self clean		
Automatic programs Auto		
More		
AirFry	425 °F (210 °C)	85–475°F (30–250°C)
Defrost	100°F (25°C)	75–125°F (25–50°C)
Settings		

Energy-saving tips

Cooking programs

- If possible, use the automatic programs for cooking food.
- Remove any accessories from the oven that you do not require for cooking.
- If a temperature range is given in the recipe, it is best to select the lower temperature and check the food after the shortest cooking time given.
- Preheat the oven only if instructed to do so in the recipe.
- If possible, do not open the door during a cooking process.
- It is best to use dark bakeware and steam oven pans with a matte finish made of non-reflective materials (enameled steel, heat-resistant glass, non-stick coated cast aluminum). Shiny materials such as stainless steel or aluminum reflect the heat and therefore can give a more uneven result. Do not cover the oven floor or the wire rack with heat-reflecting aluminum foil.
- Monitor cooking durations to avoid wasting energy when cooking. Set the cooking duration, or use a probe if you have one.
- The Convection operating mode can be used for cooking many dishes. Because the fan distributes the heat in the oven compartment right away, it allows you to use a lower temperature than you would with Surround. It also enables you to cook on multiple shelf levels at the same time.
- Convection Broil is the best operating mode for broiled dishes. Lower temperatures can be used than with other broil modes that use the maximum temperature setting.
- Whenever possible you should cook several dishes at the same time. Place them next to each other in the oven or on different shelf levels.
- Dishes which you are unable to prepare at the same time should, if possible, be cooked one after the other in order to make use of existing heat in the oven.

Residual heat utilization

- The temperature in cooking programs using temperatures above 285°F (140°C) which take longer than 30 minutes to cook can be turned down to the lowest possible temperature about 5 minutes before the end of cooking. The residual heat in the oven is sufficient for cooking the food until it is done. However, do not turn the oven off (see "IMPORTANT SAFETY INSTRUCTIONS").
- If you have set a cooking duration for a cooking program, the oven heating elements will turn off automatically shortly before the end of cooking. The residual heat in the oven is sufficient to complete the cooking process.
- It is best to start the Self Clean program immediately after a cooking program. The residual heat in the oven will help reduce the amount of energy required.

Customizing settings

- Select the Display | QuickTouch | Off setting for the control elements in order to reduce energy consumption.
- Select the Lighting | Off or "On" for 15 seconds setting for the oven interior lighting. You can turn the oven interior lighting on again at any time by tapping the ☼ sensor button.

Energy-saving mode

The oven will turn itself off automatically to save energy if a program is not being run and no controls have been operated. The time of day will appear on the display or the display will remain dark (see "Settings").

■ Turn the oven on.

The main menu will appear.

■ Place the food in the oven compartment.

■ Select the operating mode you want to use.

The operating mode will appear first, followed by the recommended temperature.

■ Adjust the recommended temperature, if necessary.

Otherwise, the recommended temperature will be accepted within a few seconds. You can change the temperature later via the arrow buttons.

■ Confirm with *OK*.

The actual temperature will appear and the preheating phase will begin.

You will see the temperature rising on the display. An audible signal will sound when the set temperature is reached for the first time.

■ After cooking, select the sensor control for the selected operating mode to end the cooking process.

■ Take the food out of the oven compartment.

■ Turn the oven off.

Changing values and settings for a cooking program

Depending on the operating mode, as soon as a cooking program is in progress, you can change the values or settings for this program.

Depending on the operating mode, you can change the following settings:

- Temperature
- Duration
- Finish at
- Start at

Changing the temperature

You can permanently reset the recommended temperature to suit your cooking preferences by selecting More | Settings | Recommended temps..

■ Select the ∧ or ∨ arrow buttons or swipe to the right or left in the area.

The desired temperature appears in the display.

■ Change the desired temperature via the navigation area.

The temperature changes in 5° steps.

■ Confirm with *OK*.

The cooking program will restart with the new desired temperature.

Setting additional durations

Cooking results can be adversely affected if there is a long delay between the food being placed in the oven and the start of cooking. Fresh food can change color and even spoil. When baking, the cake mixture or dough can dry out, and the raising agents can lose their effectiveness.
Select as short a time as possible until the start of the cooking process.

You have placed the food in the oven compartment, selected an operating mode and the required settings such as the temperature.

By entering Duration, Finish at, or Start at via the ◴ sensor control, you can automatically switch the cooking process off or on and off.

- Duration
  Enter the required cooking duration for the food. The oven heating will turn off automatically once the cooking duration has elapsed. The maximum cooking duration that can be set depends on the operating mode that you have selected.
- Finish at
  Specify when you want the cooking process to finish. The oven will turn off automatically at the time you have set.
- Start at
  This function will only appear in the menu if you have set a Duration or Finish at time. With Start at, you have to specify when you want the cooking process to start. The oven will turn on automatically at the time you have set.

■ Select the ◴ sensor control.
■ Set the required times.
■ Confirm with *OK*.
■ Touch the ⮌ sensor control to return to the menu of the selected operating mode.

Changing set durations

■ Select the ◴ sensor button.
■ Select the time you want.
■ Confirm with *OK*.
■ Select Change.
■ Change the set time.
■ Confirm with *OK*.
■ Touch the ⮌ sensor button to return to the menu of the selected operating mode.

These settings will be deleted in the event of a power failure.

Deleting the set cooking durations

■ Select the ◴ sensor button.
■ Select the time you want.
■ Confirm with *OK*.
■ Select Delete.
■ Confirm with *OK*.
■ Touch the ⮌ sensor button to return to the menu of the selected operating mode.

If you delete Duration, the set durations for Finish at and Start at are also deleted.
If you delete Finish at or Start at, the cooking program will start using the cooking duration set.

Canceling a cooking program

- Touch the sensor button for the selected operating mode or the ⮌ sensor button.
- When Cancel process appears in the display, confirm with *OK*.

The oven heating and lighting will then turn off. Any cooking durations set will be deleted.

The main menu will appear.

Preheating the oven compartment

The Booster function is used to quickly preheat the oven compartment in some operating modes.

The oven compartment only needs to be preheated in a few cases.

- You can place most dishes in the cold oven compartment to make use of the heat produced during the heating-up phase.
- Preheat the oven when cooking the following food with the following operating modes:

- dark bread dough as well as prime rib and fillets with the Convection and Surround operating modes
- cakes, cookies, and pastries with a short cooking duration (approx. 30 minutes or less) as well as delicate items (e.g., sponge) with the Surround operating mode (without the Booster function)

Booster

The Booster function is used to quickly preheat the oven.

This function is switched on as the factory default setting for the following operating modes (More | Settings | Booster | On):

- Convection
- AirFry
- Surround
- Auto Roast

If you set a temperature above 210°F (100°C) and the Booster function is turned on, a rapid preheating phase heats the oven compartment to the set temperature. The browning/broiling element and the ring heating element come on together with the fan.

Delicate items (e.g., sponge or cookies) will brown too quickly on the top if the Booster function is used.

Turn off the Booster function for these items.

Turning Booster off for a cooking process

- Select the Booster | Off setting before selecting the desired operating mode.

The Booster function is turned off during the heating-up phase. Only the heater elements for the selected operating mode are used to preheat the oven compartment.

If you then want to restart a cooking process with the Booster function, select the Booster | On setting to switch the function on again.

With the wide range of automatic programs, you can achieve excellent results with ease.

Categories

The automatic programs Auto are sorted into categories to provide a better overview. Simply select the appropriate automatic program for the type of food you are cooking and follow the instructions on the display.

Using automatic programs

■ Select Automatic programs Auto.

A list will appear.

■ Select the food category you want.

The automatic programs available for the category selected will then appear.

■ Select the automatic program that you want to use.

■ Follow the instructions on the display.

Usage notes

- After cooking, allow the oven compartment to cool down to room temperature again before starting a automatic program.
- Some automatic programs require a preheating phase before food can be placed in the oven. A prompt will appear on the display indicating when this needs to be done.
- Some automatic programs require liquid to be added during the cooking process. You will be prompted by a message on the display when this needs to be done (e.g., for adding liquid).
- The duration quoted for automatic programs is an estimate. It may increase or decrease depending on the program. The duration, in particular with meat, will vary depending on the initial temperature of the food.

Additional applications

This section provides information on the following applications:

- Defrost
- Slow Roasting
- Warm-up Cookware
- Canning
- Frozen food/ready meals

Defrost

Gentle defrosting of frozen food means that the vitamins and minerals are generally retained.

- Select More.
- Select Defrost.
- Alter the recommended temperature if necessary.

Air is circulated throughout the oven compartment to gently defrost the food.

Always observe USDA/CFIA food safety guidelines.

⚠ Risk of infection from bacteria.
Bacteria such as salmonella can cause life-threatening food poisoning.
It is particularly important to observe food hygiene rules when defrosting fish and meat, and in particular when defrosting poultry.
Do not use the liquid produced during defrosting.
Process the food as required as soon as it has been defrosted.

Tips

- Remove the packaging and place the frozen food on the universal tray or in a suitable bowl or dish.
- Use the universal tray with the wire rack placed on top of it for defrosting poultry. This way the food will not be lying in the defrosted liquid.
- Fish does not need to be fully defrosted before cooking. Defrost until the food has started to thaw. The surface will then be sufficiently thawed to take herbs and seasoning.

Defrosting durations

The duration needed for defrosting depends on the type and weight of the frozen food:

Frozen food	[oz/g]	[min]
Chicken	28/800	90–120
Meat	17.5/500	60–90
	35/1000	90–120
Sausage	17.5/500	30–50
Fish	35/1000	60–90
Strawberries	10.5/300	30–40
Pound cake	17.5/500	20–30
Bread	17.5/500	30–50

Weight/ defrosting duration

Slow Roasting

Slow Roasting is ideal for cooking delicate cuts of beef, pork, veal, or lamb to perfection.

Always observe USDA/CFIA food safety guidelines.

First briefly sear the meat on all sides at a high temperature on the cooktop in order to seal it.

Then place the meat in the preheated oven compartment where the low temperature and long cooking duration will cook it to perfection and ensure it is very tender.

The meat will relax. The juices inside will start to circulate evenly throughout the meat to reach the outer layers.
This gives very tender and succulent results.

- Only use lean meat which has been correctly seasoned and trimmed. Bones should be removed before cooking.
- For searing, use a suitable cooking oil or fat that can withstand high temperatures (e.g., clarified butter, vegetable oil).
- Do not cover meat during the cooking process.

The cooking duration takes approx. 2–4 hours depending on the weight and size of the meat and how well you want it cooked.

- As soon as the cooking process has finished, you can carve the meat straight from the oven. It does not need to rest.
- You can leave the meat in the oven to keep warm until you serve it. This will not affect results in any way.
- Serve on preheated plates with very hot sauce or gravy to prevent it cooling down too quickly. The meat is at an ideal temperature to eat straight away.

Using Surround

Use the universal tray with the wire rack placed on top of it.
Turn off the Booster function for the preheating phase.

- Place the wire rack with the universal tray on shelf level 2.
- Select the Surround function and a temperature of 250°F (120°C) without the Booster function.
- Preheat the oven together with the universal tray and wire rack for approx. 15 minutes.
- While the oven is preheating, sear the meat on all sides on the cooktop.

⚠ Danger of burning due to hot surfaces.
The oven gets hot during operation. You could burn yourself on the heating elements, oven compartment, or accessories.
When the oven is hot, use pot holders to insert, remove, or turn food, as well as when adjusting the oven shelves, etc.

- Place the seared meat on the wire rack.
- Reduce the temperature to 210°F (100°C).
- Continue cooking until the end of the cooking duration.

Additional applications

Cooking durations/core temperatures

Always observe USDA/CFIA food safety guidelines.

Meat	Cooking duration	Core temperature
Beef tenderloin, approx. 2.2 lbs (1 kg)		
- rare	60–80 min	113–119°F (45–48°C)
- medium	75–85 min	129–135°F (54–57°C)
- well done	110–130 min	145–151°F (63–66°C)
Prime rib, approx. 2.2 lbs (1 kg)		
- rare	70–80 min	113–119°F (45–48°C)
- medium	105–115 min	129–135°F (54–57°C)
- well done	130–140 min	145–151°F (63–66°C)
Pork tenderloin, approx. 0.75 lbs (350 g)	70–90 min	145–156°F (63–69°C)
Gammon joint*, approx. 2.2 lbs (1 kg)	140–160 min	145–151°F (63–66°C)
Veal tenderloin, approx. 2.2 lbs (1 kg)		
- pink	45–55 min	113–119°F (45–48°C)
- medium	75–85 min	129–135°F (54–57°C)
- well done	90–100 min	145–151°F (63–66°C)
Saddle of veal*, approx. 2.2 lbs (1 kg)		
- pink	75–85 min	113–119°F (45–48°C)
- medium	100–130 min	129–135°F (54–57°C)
- well done	130–140 min	145–151°F (63–66°C)
Saddle of lamb*	40–60 min	129–151°F (54–66°C)

* Boneless

Canning

⚠ Risk of infection from bacteria.
The spores of the botulinum bacterium are not sufficiently killed by canning legumes and meat only once. Toxins may form which can lead to serious poisoning. These spores are only destroyed by canning the food again.
After they have cooled down, **always** reheat legumes and meat a second time within 2 days.

⚠ Risk of injury from increased pressure in sealed cans.
Canning food and heating it up in closed containers results in an increase in pressure which can cause them to explode.
Do not use cans for canning or reheating food.

Always observe USDA/CFIA food safety guidelines.

Preparing fruit and vegetables

The instructions are for 6 jars with a capacity of 1 L each.

Only use jars that are specifically designed for canning (preserving jars or jars with a screw cap). Only use undamaged jars and rubber rings.

- Rinse the jars with hot water before canning and fill them up to a maximum of 3/4" (2 cm) below the rim.
- After filling the jars, clean the outside of the rims with a clean cloth and hot water, and then seal the jars.
- Slide the universal tray onto shelf level 2. Place the jars on the tray.
- Select the Convection operating mode and a temperature of 320–340°F (160–170°C).
- Wait until bubbles rise evenly in the jars.

Then reduce the temperature to prevent the contents from boiling over.

Canning fruit and vegetables

- Set the specified post-canning warming temperature as soon as bubbles are visible in the jars, then leave the jars in the warm oven for the time specified.

Canning vegetables

- As soon as bubbles are visible in the jars, set the specified canning temperature and cook the vegetables for the time specified.
- After canning, set the specified post-canning warming temperature, then leave the jars in the warm oven for the time specified.

	/	/
Fruit	–/–	85°F (30°C) 25–35 min
Pickling cucumbers	–/–	85°F (30°C) 25–30 min
Red beets	250°F (120°C) 30–40 min	85°F (30°C) 25–30 min
Beans (green or yellow)	250°F (120°C) 90–120 min	85°F (30°C) 25–30 min

/ Canning temperature and time once bubbles are visible in the jars
/ Post-canning warming temperature and time

Removing the jars after canning

⚠ Risk of injury caused by hot surfaces.
The jars will be very hot after canning. Use oven mitts when removing the jars from the oven.

- Take the jars out of the oven.
- Cover the jars with a towel and leave to set for approx. 24 hours in a draft-free area.
- After they have cooled down, **always** reheat beans and meat a second time within 2 days.
- Remove the fasteners from the jars and make sure all jars are closed properly when storing them.

Either boil open jars again or store them in a cool place and consume the preserved fruit or vegetables immediately.

- Check the jars during storage. If jars have opened during storage or if the screw cap is bulging and does not make a popping noise when opened, dispose of the contents.

Frozen food/ready meals

Tips for cakes, pizza, and baguettes

- Bake cakes, pizza, and baguettes on parchment paper on the wire rack.
- Use the lowest temperature recommended by the manufacturer.

Tips for French fries, croquettes, and similar items

Use the AirFry operating mode to cook these frozen foods (see “AirFry”).

Preparing frozen food/ready meals

Handling and cooking food correctly is essential for maintaining good health.
Cakes, pizzas, and French fries should be cooked until golden, not dark brown.

- Select the operating mode and temperatures recommended on the food’s packaging.
- Preheat the oven.
- Place the food in the preheated oven on the shelf level recommended on the packaging.
- Check the food at the end of the shortest time recommended on the packaging.

Warm-up Cookware

Use the Convection operating mode for preheating dishware.

Only preheat heat-resistant dishware.

- Place the wire rack on shelf level 1 and place the dishware to be preheated on it. Depending on the size of the dishware, you can also place it on the oven floor and take the side racks out to make more room.
- Select Convection.
- Set the temperature to 120–175°F (50–80°C).

⚠ Risk of burns!
Use pot holders when removing dishware. Spots of condensation may form on the bottom of the dishware.

- Remove the heated dishware from the oven.

Handling and cooking food correctly is essential for maintaining good health.
Cakes, pizzas, and French fries should be cooked until golden, not dark brown.

Always observe USDA/CFIA food safety guidelines.

Tips for baking

- Set a cooking duration. If used for baking, do not delay the start for too long. Otherwise the cake mixture or dough will dry out, and the raising agents will lose their effectiveness.
- Generally speaking, you can use wire racks, baking trays, universal trays, and any type of bakeware made of heat-resistant material.
- Avoid using bright, thin-walled pans made from a shiny material as they give an uneven or poor browning result. In certain unfavorable conditions, the food will not cook properly.
- Place cakes in rectangular bakeware on the wire rack with the longer side across the width of the oven for optimum heat distribution and even results.
- Always place bakeware on the wire rack.
- When baking cakes with fruit toppings or deep cakes, place the pan on the universal tray to catch any spillages.

Using parchment paper

Miele accessories, e.g., the universal tray, are treated with PerfectClean (see “Features”). Surfaces treated with PerfectClean generally do not need to be greased or covered with parchment paper.

- Use parchment paper when baking lye mixtures (e.g., pretzels) because the sodium hydroxide can damage the PerfectClean treated surface.
- Use parchment paper when baking sponge cake, meringue, macaroons, or similar items. These are more likely to stick due to their high egg white content.
- Use parchment paper when cooking frozen food on the wire rack.

Selecting the temperature

- Select the suggested temperature in general.

Choosing a baking temperature higher than those recommended may reduce the cooking time, but will lead to uneven browning and unsatisfactory cooking results.

Selecting the cooking duration

- Check whether the food is cooked shortly before the end of the specified cooking duration. Stick a wooden skewer into the food.

If it comes out clean without any batter/dough on it, the food is done.

Notes on the operating modes

You can find an overview of all the operating modes with their recommended values in “Main and submenus”.

Using Automatic programs Auto

■ Follow the instructions on the display.

Using Convection

Because the blower distributes the heat around the oven compartment straight away, you can use a lower temperature than you would with the Surround operating mode.

Use this operating mode if you are baking on multiple shelf levels at the same time.

■ 1 shelf: Place the food on shelf level 2.

■ 2 shelves: Place the food on shelf levels 1+3 or 2+4.

■ 3 shelves: Place the food on shelf levels 1+3+5.

Tips

- If you are cooking on multiple shelf levels at the same time, slide the universal tray in on the lowest level.
- For moist cookies and cakes, bake on a maximum of 2 shelf levels at once.

Using Intensive

Use this operating mode for baking cakes with moist toppings.

Do **not** use this operating mode for baking thin biscuits.

■ Place cakes on shelf level 1 or 2.

Using Surround

Dark metal, enamel, or aluminum bakeware with a matte finish, as well as heat-resistant glass, ceramic, and coated bakeware can be used.

Use this operating mode for cooking traditional recipes. If using an older recipe or cookbook, set the oven temperature 25°F (10°C) lower than that recommended. This will not change the cooking duration.

■ Place the food on shelf level 1 or 2.

Always observe USDA/CFIA food safety guidelines.

Tips for roasting

- You can use all dishware made from temperature-resistant materials, e.g., roasting dishes, roasting pans with lid, ovenproof glass dishes, roasting bags, dishes made from earthenware or cast iron, the universal tray, wire rack, and/or anti-splash insert (if available) on top of the universal tray.
- **Preheating** the oven is only required when preparing roast beef and fillets. Preheating is generally not necessary.
- Use a **closed cooking container** for roasting meat, such as a roasting dish. The meat will stay succulent. The oven compartment will also stay cleaner than when roasting on the wire rack. It ensures that enough stock remains for making gravy.
- If you are using a **roasting bag**, follow the instructions on the packaging.
- If you are using the **wire rack** or an **open cooking container** for roasting, you can add a little fat or oil to very lean meat or place a few strips of bacon on the top.
- **Season** the meat and place in the cooking container. Dot with butter or brush with oil or cooking fat. For large lean cuts of meat (4–6 lb/2–3 kg) and fatty poultry, add about 1/2 cup (1/8 liter) of water to the dish.
- Do not add too much liquid during cooking as this will hinder the **browning** process. Browning only occurs towards the end of the cooking duration. Remove the lid about halfway through the cooking duration if you want a more intensive browning result.
- At the end of the program, take the food out of the oven, cover it, and leave to **stand** for about 10 minutes. This helps retain the juices when the meat is sliced.
- For a crisp finish, baste **poultry** 10 minutes before the end of the cooking duration with slightly salted water.

Selecting the temperature

- As a general rule, select the temperature given in the corresponding recipe.
- For large pieces of meat, do not choose a temperature that is too high. The roasting process will take longer, but the meat will cook through evenly and the skin or crackling will not be too thick.
- When cooking with Convection and Auto Roast, select a temperature approx. 50°F (20°C) lower than when using Surround.
- When roasting on the wire rack, set a temperature approx. 25°F (10°C) lower than for roasting in a covered cooking container.

Selecting the cooking duration

- Check whether the food is cooked shortly before the end of the specified cooking duration.

Tips

- For frozen meat, increase the cooking duration by approx. 10 minutes per lb (20 minutes per kg).
- Frozen meat weighing less than approx. 3.3 lb (1.5 kg) does not need to be defrosted before roasting.

Notes on the operating modes

You can find an overview of all the operating modes with their recommended values in “Main and submenus”.

Use the Bake operating mode towards the end of the cooking duration to brown the base of the food.

Do not use the Intensive operating mode for roasting as the juices will become too dark.

Using Automatic programs Auto

- Follow the instructions on the display.

Using Convection or Auto Roast

These operating modes are suitable for roasting meat, fish, and poultry that needs to be well browned, as well as prime rib and fillet.

The Convection operating mode allows you to use a lower temperature than you would with the Surround operating mode, because the heat is immediately distributed throughout the oven compartment.

With the Auto Roast operating mode, the oven compartment heats initially to a high searing temperature (approx. 450°F/230°C). As soon as this temperature has been reached, the oven automatically drops the temperature back down to the preselected cooking temperature (continued roasting temperature).

- Place the food on shelf level 2.

Using Surround

Use this operating mode for cooking traditional recipes. If using an older recipe or cookbook, set the oven temperature 50 °F (10 °C) lower than that recommended. This will not change the cooking duration.

- Place the food on shelf level 2.

Broiling

⚠ Risk of injury caused by hot surfaces.
If you broil with the door open, the hot air will escape from the oven before it has been cooled by the cooling fan. The control elements will get hot.
Broil with the oven door closed.

Always observe USDA/CFIA food safety guidelines.

Tips for broiling

- Preheating is necessary when broiling. Preheat the browning/broiling element for approx. 5 minutes with the door closed.
- Add a little oil to lean meat if necessary. Do not use other types of fat as they can easily burn and cause smoke.
- Clean fish in the normal way. To enhance the flavor, season with a little salt. You can also drizzle the fish with lemon juice.
- Use the universal tray with the wire rack or the broiling and roasting insert (if present) placed on top. The tray under the insert will collect the meat juices and stop them from burning so that they can be used for making gravy and sauces. Brush the wire rack or the broiling and roasting insert with oil and then place the food on top.

Do not use the baking tray.

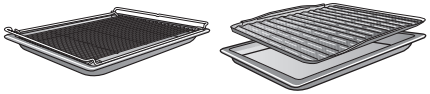

Selecting the temperature

- As a general rule, select the temperature given in the corresponding recipe.
- For large pieces of meat, do not choose a temperature that is too high. The roasting process will take longer, but the meat will cook through evenly and the skin or crackling will not be too thick.

Choosing a shelf level

- Select the shelf level depending on the thickness of the food to be cooked.
- Place flat food on shelf level 3 or 4.
- Place thicker food on shelf level 1 or 2.

Selecting the ⏲ cooking duration

- Broil thinner cuts of meat/slices of fish for approx. 6–8 minutes per side. It is best to broil food of a similar thickness at the same time so that the cooking durations do not vary too much.
- Check whether the food is cooked shortly before the end of the specified cooking duration.

Tip: If the surface of a thicker cut of meat is browned but the center is still raw, move the food to a lower level or reduce the temperature and continue broiling. This will stop the surface from becoming too dark.

Notes on the operating modes

You can find an overview of all the operating modes with their recommended values in “Main and submenus”.

Using Maxi Broil

Use this operating mode to broil flat thin cuts in large quantities and for browning large baked dishes.

The entire browning/broiling element will become red hot to produce the necessary heat.

Using Convection Broil

This operating mode is suitable for broiling thicker food, such as chicken.

We generally recommend a temperature setting of 425°F (220°C) for thinner types of food and 350-400°F (180–200°C) for thicker cuts.

Handling and cooking food correctly is essential for maintaining good health.
Food such as French fries should be cooked until golden, not dark brown.

The AirFry operating mode is used to fry food in hot air. AirFrying is a gentle method of cooking which achieves even, crispy results.

AirFrying is therefore ideal for cooking frozen food such as French fries or potato croquettes.

Accessories

- For **food that does not drip**, e.g., French fries, use the Gourmet baking and AirFry tray, perforated.
  The fine perforations of the Gourmet baking and AirFry tray ensure that the food is browned and crispy on all sides.

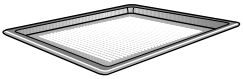

- For **food that drips**, e.g., chicken thighs, use the universal tray with the grilling and roasting insert (if present) placed on top.
  The grilling and roasting insert will collect the meat juices and stop them from burning so that they can be used for making gravy and sauces. Brush the grilling and roasting insert with oil and then place the food on top.

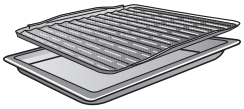

- Place food in bakeware centrally on the rack.

Tips for AirFrying

- Do not defrost frozen food.
- Place the food in the oven without preheating.
  If the food is not crispy enough for you, you can try preheating the oven next time.
- Only cook on one level.
  Cooking on multiple levels will create too much moisture in the oven compartment and the food will not become crispy.
- As a general rule, food should be placed on shelf level 2.
  If you want more browning on top, you can use a higher shelf level next time.
- Food such as French fries should be turned halfway through the cooking duration if possible.
  Set the timer to remind you.

Using the AirFry operating mode

- Spread the food evenly over the dishware in a single layer if possible.
- Place the food on shelf level 2.
- Select More.
- Select the AirFry operating mode.

The operating mode will appear first, followed by the recommended temperature.

- Adjust the recommended temperature, if necessary.

The recommended temperature will be accepted within a few seconds. You can change the temperature later by selecting the temperature indicator.

- Confirm with *OK*.

- At the end of the cooking duration, check whether the food is crispy and brown enough.
- After cooking, select the sensor control for the selected operating mode to end the cooking process.
- Take the food out of the oven compartment.
- Turn the oven off.

⚠ Risk of injury caused by hot surfaces.
The oven gets hot during operation. You could burn yourself on the heating elements, oven compartment, or accessories.
Allow the heating elements, oven compartment, and accessories to cool before manual cleaning.

⚠ Risk of injury due to electric shock.
The steam from a steam cleaning appliance could reach live electrical components and cause a short circuit.
Never use a steam cleaner for cleaning.

All surfaces could be discolored or damaged if unsuitable cleaning agents are used. The oven front is particularly susceptible to damage from oven cleaners or descaling agents.
All surfaces are susceptible to scratching. Scratches on glass can lead to breakage in some circumstances.
Remove all cleaning agent residues immediately.

Unsuitable cleaning agents

To avoid damaging the surfaces of your appliance, do not use the following cleaning agents:

- cleaning agents containing soda, ammonia, acids, or chlorides
- cleaning agents containing descaling agents on the front
- abrasive cleaning agents (e.g., powder cleaners and cream cleaners)
- solvent-based cleaning agents
- stainless steel cleaners
- dishwasher cleaning agents
- glass cleaners
- cleaning agents for glass-ceramic cooktops
- hard, abrasive brushes or sponges (e.g., pot scourers, brushes, or sponges which have been previously used with abrasive cleaning agents)
- eraser sponges
- sharp metal scrapers
- steel wool
- spot cleaning with mechanical cleaning agents
- oven cleaners
- stainless-steel spiral pads

If soiling is allowed to sit for any length of time, it may become impossible to remove. If the appliance is used frequently without being cleaned, it may become very difficult to clean.
It is therefore best to remove any soiling immediately.

The accessories are not dishwasher-safe.

Tip: Soiling caused by spilled fruit juices and cake mixtures is best removed while the oven is still warm. Use caution and make sure the oven is not too hot.

To make it easier to clean the oven:

- Remove the door.
- Remove the side runners together with the FlexiClip telescopic runners (if present).
- Lower the browning/broiling element.

Removing normal soiling

There is a fiberglass seal around the oven compartment which seals the inside of the glass oven door and can be damaged by rubbing and scouring.

Avoid cleaning the fiberglass seal. The fiberglass seal is essential for sealing the door properly.

Removing normal soiling

- Remove normal soiling immediately with warm water, liquid dish soap, and a clean sponge or a clean, damp microfiber cloth.
- Remove all cleaning agent residues thoroughly with clean water.
  This is particularly important for any parts with a PerfectClean finish, as cleaning agent residues will impair the non-stick function.
- After cleaning, wipe the surfaces dry using a soft cloth.

Removing stubborn soiling

Do not line the oven (e.g., with aluminum foil) and do not use standard oven cleaners unless they are suitable for use in a self-cleaning oven.

Spilt fruit and roasting juices may cause lasting discoloration or matte patches on surfaces. This discoloration will not affect the properties of the surface finish.

Do not attempt to remove these marks. Clean them following the instructions given here.

- Baked-on deposits can be removed with a glass scraper or with a stainless-steel spiral pad, hot water, and liquid dish soap.

You do not need to treat the oven compartment with an oven cleaner as the oven comes with Self Clean.

- If necessary, you can use the scouring pad on the back of a non-scratching dish sponge to remove the soiling after the holding time.
- Remove all cleaning agent residues thoroughly with clean water.
- Dry all surfaces with a soft cloth.

Cleaning the oven compartment with Self clean

Instead of cleaning the oven compartment by hand, you can run the Self clean function.

During the Self Clean function, the oven compartment reaches temperatures in excess of 750°F (400°C). Any grime that has accumulated will be broken down and burnt to ash as a result of the high temperatures.

There are 3 Self Clean settings available, each with a different duration:

- level 1 for light soiling
- level 2 for heavier soiling
- level 3 for very heavy soiling

The oven door is automatically locked when the Self Clean process starts. It cannot be opened until after the program has finished.

The timer can be used to delay the start time of the Self Clean program.

At the end of the Self Clean program, any residues such as ash from the cleaning process, which are formed depending on the oven compartment's degree of soiling, can be easily wiped away.

Preparing for Self Clean

Accessories that are not suitable for the Self Clean program will be damaged by the high temperatures.

Remove all accessories that are not suitable for the Self Clean program from the oven compartment before starting the Self Clean process. This also applies for optional accessories that are not suitable for the Self Clean program.

The following accessories are suitable for the Self Clean program and can be left in the oven compartment during the process:

– Side runners
– FlexiClip telescopic runners HFC 72
– Wire rack HBBR 72

■ Remove all accessories that are not suitable for the Self Clean program from the oven.

■ Slide the wire rack into the top shelf level.

Coarse soiling in the oven compartment can cause thick smoke to develop.
Burnt-on residues can cause lasting discoloration or matte spots on enameled surfaces.

Before starting the Self Clean program, remove coarse soiling from the oven compartment and scrape any burnt-on residues off enameled surfaces with a glass scraper.

Starting Self Clean

⚠ Risk of injury caused by hot surfaces.
The oven gets much hotter during the Self Clean program than during normal use.
Do not let children touch the oven during the Self Clean program.

- Select Self clean.
- Select the level required according to the amount of soiling.
- Confirm with *OK*.

Follow the instructions on the display.

- Confirm with *OK*.

You can start the Self Clean program straight away or schedule it to begin at a later time.

Starting Self Clean straight away

- To start the Self Clean program straight away, select Start now.
- Confirm with *OK*.

The Self Clean program will start.

The door will lock automatically. The oven heating and the cooling fan will then turn on automatically.

The oven interior lighting will not come on during the Self Clean program.

The time left for the Self Clean program will start counting down on the display. You cannot alter the duration.

You can use the timer while the Self Clean program is running. When the set time has elapsed, the audible signal will sound and 🔔 will flash. The time will then continue to increase on the display. When you tap the 🔔 sensor button, the audible signal will stop and the symbols on the display will go out.

Starting Self Clean at a later time

- To start the Self Clean program later, select Start at.
- Confirm with *OK*.
- Set the time at which you want the Self Clean program to start.
- Confirm with *OK*.

The door will lock automatically. Start at and the start time set will appear on the display.

The sensor button lights up orange.

You can reset the start time via the 🕘 sensor button at any point up to the start time.

Once the start time has been reached, the oven heating and cooling fan functions will be automatically activated. The time left will appear on the display.

Finishing Self Clean

When the time left has counted down to 00:00 h, a message will appear in the display to tell you that the door is unlocking.

Program finished will appear on the display and an audible signal will sound as soon as the door has been unlocked.

- Turn the oven off.

The audible signal will stop and the symbols on the display will go out.

⚠ Danger of injury caused by hot surfaces.
At the end of the Self Clean program, the oven will still be very hot. You could burn yourself on the heater elements, oven compartment, or accessories.
Allow the heater elements, oven compartment, and accessories to cool down before removing any Self Clean residues or oiling the side runners.

- Clean the oven compartment and accessories suitable for the Self Clean program to remove any Self Clean residues (e.g., ash) that can build up depending on the degree of soiling in the oven compartment.
- Add a few drops of heat-resistant cooking oil to some kitchen paper and use this to lubricate the side runners.

Most residues can be removed with warm water, liquid dish soap, and a clean sponge or a clean, damp microfiber cloth.

Depending on the degree of soiling, a visible deposit could build up on the glass on the inside of the oven door. You can remove this using the scouring side of a dish sponge, a glass scraper, or with a stainless steel spiral pad (e.g., Spontex Spirinett) and liquid dish soap.

There is a fiberglass seal around the oven compartment which seals the inside of the glass oven door and can be damaged by rubbing and scouring.
Avoid cleaning the fiberglass seal. The fiberglass seal is essential for sealing the door properly.

Spilled fruit juices may cause lasting discoloration of enameled surfaces. This discoloration is permanent but will not affect the properties of the enamel.
Do not attempt to remove these marks.

Extending and retracting the FlexiClip telescopic runners

After cleaning, discoloration or light patches may remain on the FlexiClip telescopic runners. This will not affect the function of the runners in any way.

- Extend and retract the FlexiClip telescopic runners several times after running the Self Clean program.

Removing the door

The door weighs approx. 24 lbs (11 kg).

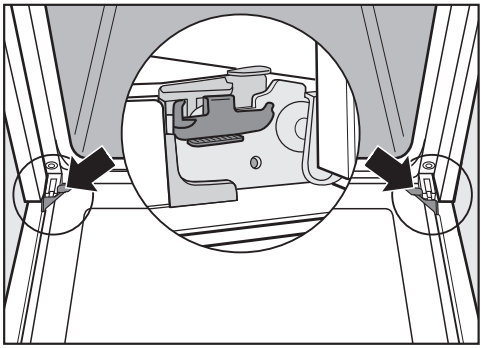

The oven door is connected to the hinges by retainers.
Before removing the door from the retainers, the locking clamps on both hinges have to be released.

- Open the door fully.

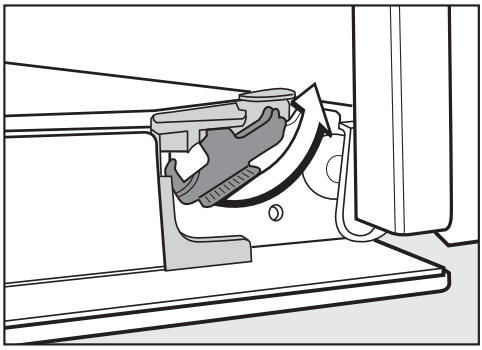

- Release the locking clamps by turning them as far as they will go.

You could damage the oven if you remove the door incorrectly.
Do not pull the door horizontally off its retainers, as they will spring back against the oven.
Do not pull the door off the retainers by the handle, as the handle could break off.

- Raise the door up till it rests partially open.



- Hold the door on either side and pull it upwards off the hinge retainers. Make sure that the door is straight.

Installing the door

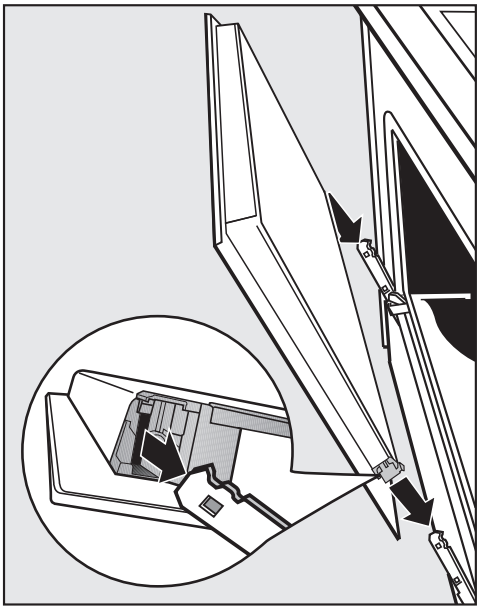

- Hold the door securely on both sides and carefully install it back into the hinge retainers.
  Make sure that you do not tilt the door.
- Open the door fully.

If the locking clamps are not locked, the door could become loose, resulting in damage.

Ensure that the locking clamps are locked after reinstalling the door.

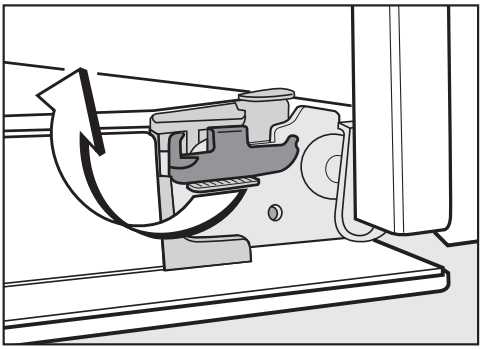

- To relock the locking clamps, turn them back up to the horizontal position as far as they will go.

Removing the side runners with FlexiClip telescopic runners

You can remove the side runners together with the FlexiClip telescopic runners (if present).

If you wish to remove the FlexiClip telescopic runners separately beforehand, please follow the instructions in “Features – Installing and removing the FlexiClip telescopic runners”.

⚠ Risk of injury caused by hot surfaces.

The oven gets hot during operation. You could burn yourself on the heating elements, oven compartment, or accessories.

Allow the heating elements, oven compartment, and accessories to cool before removing the side runners.

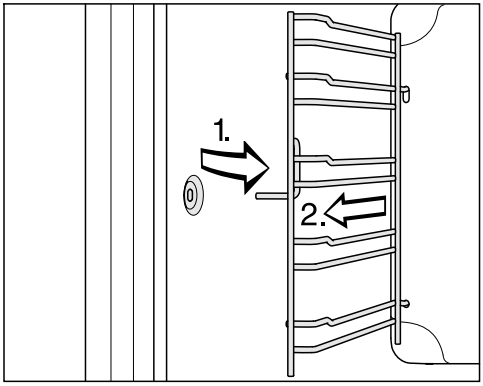

- Pull the side runners out of the holder (1.) and remove them (2.).

Reinstall by following these instructions in reverse order.

- Insert the components carefully.

Lowering the browning/broiling element

If the ceiling of the oven is badly soiled, the browning/broiling element can be lowered to make cleaning easier. Clean the ceiling of the oven regularly with a damp cloth or a dish sponge.

⚠ Risk of injury caused by hot surfaces.
The oven gets hot during operation. You could burn yourself on the heating elements, oven compartment, or accessories.
Allow the heating elements, oven compartment, and accessories to cool before manual cleaning.

You may damage the enamel on the oven floor if you drop fastening nuts on it.
Place a cloth or similar item over the oven floor to protect it.

- Remove the side runners.

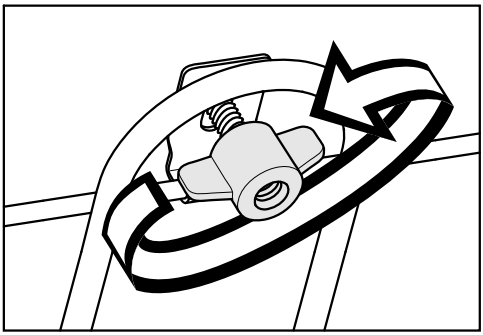

- Unscrew the wing nut.

Take care not to damage the browning/broiling element.
Do not use force when lowering the browning/broiling element.

- Carefully lower the browning/broiling element.

You can now access the ceiling of the oven.

- Clean the ceiling of the oven with hot water and liquid dish soap, applied with a clean sponge cloth or a clean, damp microfiber cloth.
- After cleaning, raise the browning/broiling element gently back up again.
- Replace the wing nut and tighten it securely.
- Reinsert the side runners.

Frequently asked questions

Many malfunctions and faults that can occur in daily operation can be easily remedied. You can save time and money in many cases, as you do not need to contact Miele Customer Service.

Information to help you rectify faults yourself can be found at www.miele.com/service.

The following tables are designed to help you to find the cause of a malfunction or fault and resolve it.

Problem	Possible cause and solution
The display is dark.	You have selected the Time | Display | Off setting. When the oven is turned off, the time-of-day display is dark. ■ As soon as the oven is turned on, the main menu will appear. If you want the time of day to be displayed constantly, select the Time | Display | On setting.
	There is no power to the oven. ■ Check that the oven's electrical plug is correctly inserted in the socket and that the circuit breaker has been switched to on. ■ Check if the breaker has tripped. If it has, contact a qualified electrician or Miele Customer Service.
The audible signal does not sound.	The audible signals are deactivated or set at too low a volume. ■ Turn on the audible signals or increase the volume with Volume | Buzzer tones.
The oven does not heat up.	Demo mode is activated. You can select menu options on the display and sensor buttons, but the oven heating does not work. ■ Deactivate Demo mode with the Showroom program | Demo Mode | Off setting.
The sensor control flashes when you switch on the oven.	You have not yet connected your oven to a Wi-Fi network. The sensor control flashes to tell you that you can easily network the oven using this control. The sensor control will stop flashing once the oven has been switched on and off multiple times, but the networking function will remain active.

Problem	Possible cause and solution
System lock 🔒 **appears on the display when the oven is turned on.**	The 🔒 system lock is activated. ■ Confirm with *OK*. Press "OK" for 6 secs will appear. ■ You can deactivate the system lock for a cooking program by touching the *OK* sensor button for at least 6 seconds. ■ If you want to permanently deactivate the system lock, select the Safety | System lock 🔒 | Off setting.
Power failure **appears on the display.**	There has been a brief power failure. This has caused the current cooking process to stop. ■ Turn the oven off and then back on again. ■ Restart the cooking process.
12:00 **appears on the display.**	There was a power failure for more than 150 hours. ■ Reset the date and time.
The sensor buttons do not respond.	You have selected the Display | QuickTouch | Off setting. When this is activated, the sensor buttons do not respond when the oven is turned off. ■ As soon as the oven is turned on, the sensor buttons will respond. If you want the sensor buttons to respond even when the oven is turned off, select the Display | QuickTouch | On setting.
	The oven is not connected to the domestic electrical supply. ■ Make sure that the plug is correctly inserted in the socket and that the socket switch has been switched to on. ■ Check if the breaker has tripped. If it has, contact a qualified electrician or Miele Customer Service.
	There is a fault with the controls. ■ Touch and hold the ⏻ On/Off button until the display turns off and the oven restarts.
Max. op. hours reached **appears on the display.**	The oven has been operating for an unusually long time. This has triggered the safety shut-off. ■ Confirm with *OK*. The oven is now ready to use again.

Frequently asked questions

Problem	Possible cause and solution
⚠ Fault **F32 appears on the display.**	The door lock for the Self Clean program has not locked. ■ Turn the oven off and then back on again. Start the Self Clean program again. ■ If the message appears again, contact Miele Customer Service.
⚠ Fault **F33 appears on the display.**	The door lock for the Self Clean program has not opened. ■ Turn the oven off and then back on again. ■ If the door lock still does not deactivate itself, contact Miele Customer Service.
Fault **and a fault code not listed here appear on the display.**	A fault has occurred that you cannot resolve. ■ Contact Miele Customer Service.
You can hear a noise after a cooking program.	The cooling fan remains turned on after a cooking program (see “Settings – Cooling fan run-on”).
The oven has turned itself off.	To save power, the oven turns off automatically if a button is not pressed after a certain amount of time or after a cooking program has ended. ■ Turn the oven back on.
The cake/cookies are not baked properly.	A different temperature than that given in the recipe was used. ■ Select the temperature required for the recipe.
	The ingredient quantities are different from those given in the recipe. ■ Check if you have amended the recipe. The addition of more liquid or more eggs will make a wetter mixture which will take longer to cook.
The browning is uneven.	You selected the wrong temperature or shelf level. ■ There will always be a slight unevenness. If browning is very uneven, check whether you selected the correct temperature and shelf level.
	The material or color of the bakeware is not suitable for the operating mode selected. ■ When using the Surround operating mode, light-colored, shiny baking pans will not produce as desirable results. Dark, matte baking pans are best for baking.

Problem	Possible cause and solution
There is still soiling in the oven compartment after a Self Clean program.	The Self Clean program burns off soiling in the oven and leaves it as ash. ■ Remove the ash with warm water, liquid dish soap, and a clean sponge or a clean, damp microfiber cloth. If there is still coarse soiling left in the oven after the Self Clean program, you should start the program again, selecting a longer duration if necessary.
The accessories make noises when they are pushed into or pulled out of the oven.	The Self-Clean-resistant surface of the side runners creates friction when accessories are pushed into or pulled out of the oven. ■ To reduce the friction, add a few drops of heat-resistant cooking oil to some kitchen paper and use this to lubricate the side runners. Repeat this after every Self Clean program.
The oven interior lighting turns off after a short time.	You have selected the Lighting | "On" for 15 seconds setting. ■ If you want the oven interior lighting to remain on during the entire cooking program, select the Lighting | On setting.
The oven interior lighting is off.	You have selected the Lighting | Off setting. ■ Press the ☼ sensor button to turn the oven interior lighting on for 15 seconds. ■ If required, select the Lighting | On or "On" for 15 seconds setting.
The oven interior lighting does not turn on. 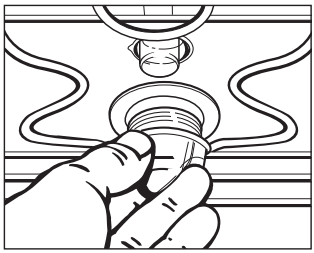	The halogen lamp is faulty. ⚠ Risk of injury caused by hot surfaces. The oven gets hot during operation. You could burn yourself on the heating elements, oven compartment, or accessories. Allow the heating elements, oven compartment, and accessories to cool before manual cleaning. ■ Disconnect the oven from the electrical supply. Unplug the appliance or switch off the breaker. ■ Turn the bulb cover a quarter turn counterclockwise to release it and then pull it together with its seal downward to take it out. ■ Replace the halogen bulb (Osram 66725 AM/A, 230 V, 25 W, G9). ■ Reinstall the bulb cover together with its seal and turn it clockwise to secure. ■ Reconnect the oven to the electrical supply.

Information to help you rectify faults yourself and about Miele spare parts can be found at www.miele.com/service.

Contact in the event of a fault

In the event of a fault which you cannot remedy yourself, please contact your Miele dealer or Miele Customer Service.

You can book a Miele Service Call online at www.miele.com/service.

Contact information for Miele Customer Service can be found at the end of this document.

Please quote the model identifier and serial number of your appliance (SN) when contacting Miele Customer Service. Both pieces of information can be found on the data plate.

This information is given on the data plate, which is visible on the front frame of the oven when the door is fully open.

Appliance warranty and product registration

You can register your product and/or view the manufacturer´s warranty terms and conditions for Miele appliances and vacuum cleaners at www.mieleusa.com.

Availability of replacement parts, repair services and maintenance information

(for Canada only)

Miele guarantees the availability of replacement parts, repair services, and the information necessary to maintain or repair this product for a reasonable period and at a reasonable price, in accordance with applicable law.

Disposal of the packing material

The cardboard box and packing materials protect the appliance during shipping.

Ensure that any plastic wrappings, bags, etc. are disposed of safely and kept out of the reach of children. Danger of suffocation!

Disposal of your old appliance

Electrical and electronic appliances contain valuable materials. They also contain certain substances, compounds and components which were essential for the proper functioning and safe use of the equipment. Handling these materials improperly by disposing of them in your household waste can be harmful to your health and the environment. Therefore, please do not dispose of your old appliance with regular household waste and follow local regulations on proper disposal.



Consult with local authorities, dealers or Miele in order to dispose of and recycle electrical and electronic appliances. Miele assumes no responsibility for deleting any personal data left on the appliance being disposed. Please ensure that your old appliance is kept away from children until removal. Observe safety requirements for appliances that may tip over or pose an entrapment hazard.

Installation

Installation dimensions

Installation in a tall or base cabinet (30" niche with trim kit EBA 7xxx)

Miele Ovens can be installed flush or proud. Discuss your requirements with your architect, kitchen designer, and installer.

More installation drawings are available on the Miele website.

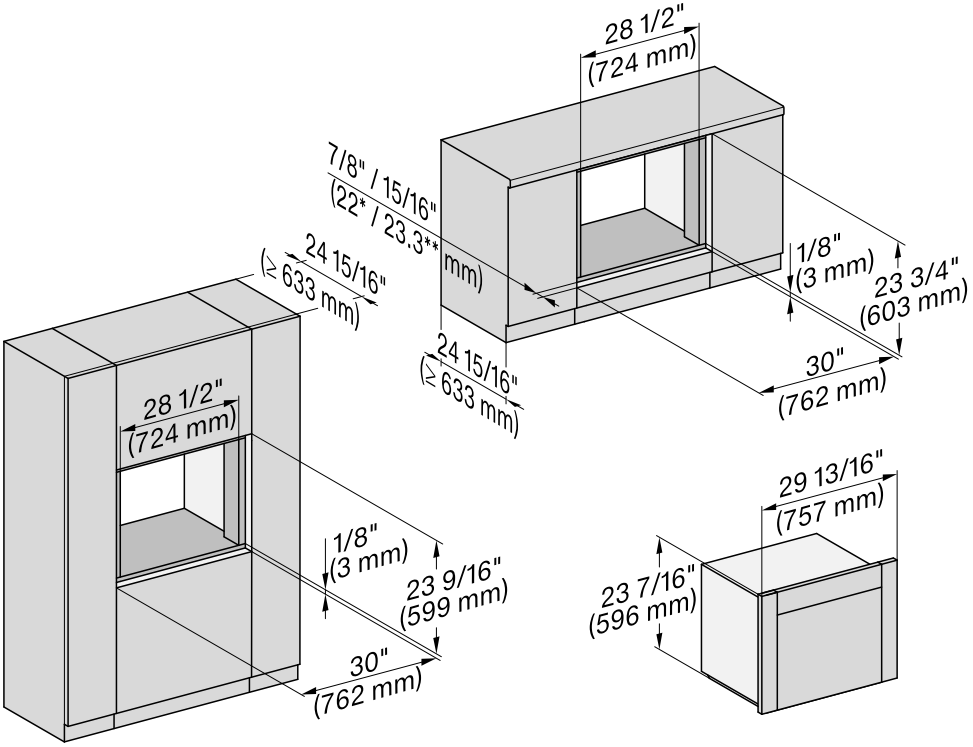

* Oven with glass front

** Oven with metal front

Installation in a tall or base cabinet (24" niche)

Miele Ovens can be installed flush or proud. Discuss your requirements with your architect, kitchen designer, and installer.

More installation drawings are available on the Miele website.

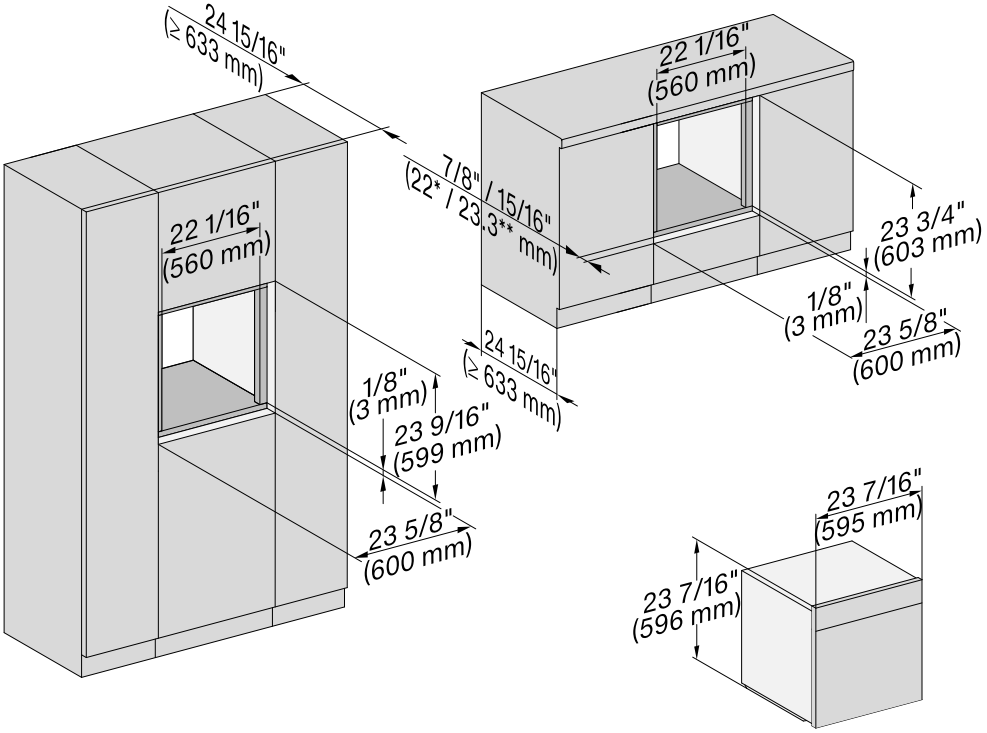

* Oven with glass front

** Oven with metal front

Side view

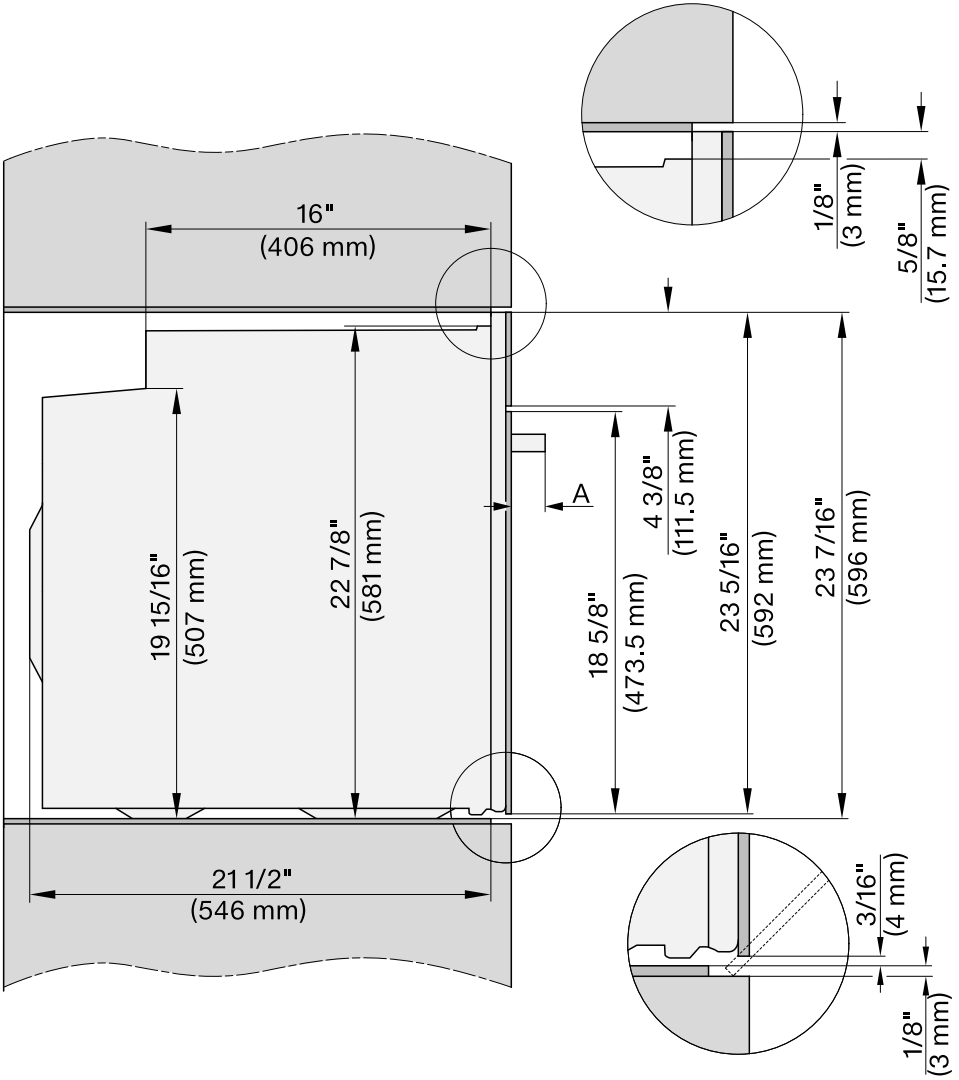

A H 72xx: 1 7/8" (47 mm)

Connections and ventilation

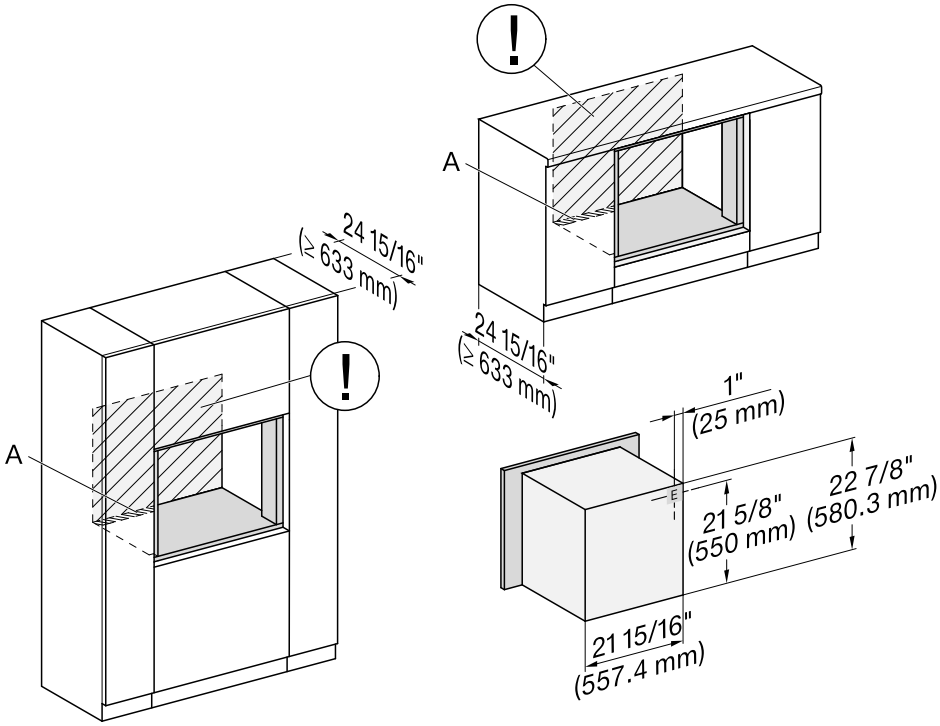

A Cutout 4" x 28 3/8" (100 mm x 720 mm) in the base of the kitchen cabinet for power cord and ventilation

Ⓘ The outlet for the electrical connection should be accessible, e.g., in an adjacent kitchen cabinet. If the electrical connection is behind the oven, the kitchen cabinet needs to be deeper than specified.

E Electrical connection

Installing and removing the oven

For safety reasons, only use the oven when it has been fully installed.

The oven requires a sufficient supply of cool air for efficient operation. The required supply of cool air must not be excessively heated by other heat sources (e.g., wood burning stoves).

The following must be observed when installing the appliance:
Make sure that the shelf that the oven sits on does not touch the wall.
Do not install heat insulation strips on the side walls of the cabinet carcase.

Do not open the door when the oven is on the floor. This could damage the door.
Do not open the door until the oven has been installed inside the housing unit.

Securing the oven in the cabinet niche

- Connect the oven to the power supply.

Do not carry the oven by the door handle. This could damage the door.
Use the handles on each side of the housing to carry the appliance.

It is a good idea to remove the door (see “Cleaning and care of the oven – Removing the door”) and the accessories before installing the appliance. The oven is then easier to push into the cabinet carcase and you do not run the risk of lifting it by the door handle.

- Push the oven into the cabinet niche and align it in the center of the cabinet niche.
- Open the door if you have not removed it.

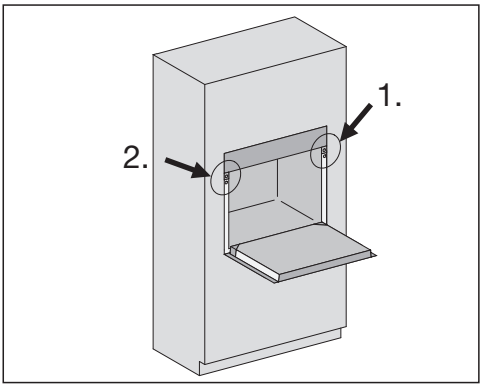

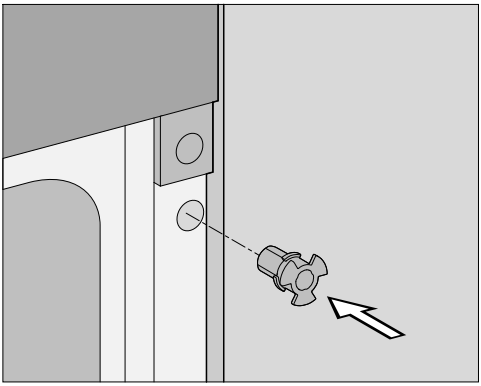

- Insert the mounting aid into the hole in the front frame.

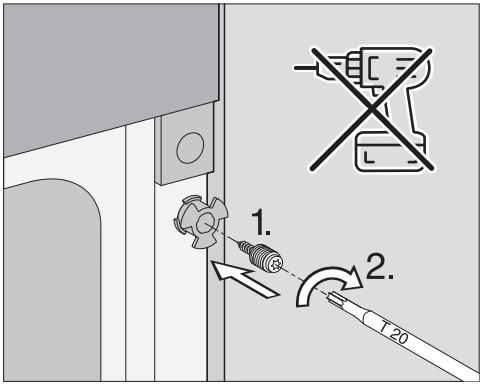

■ Insert the bolt into the mounting aid and tighten it in the cabinet niche. **Do not** use a cordless screwdriver.

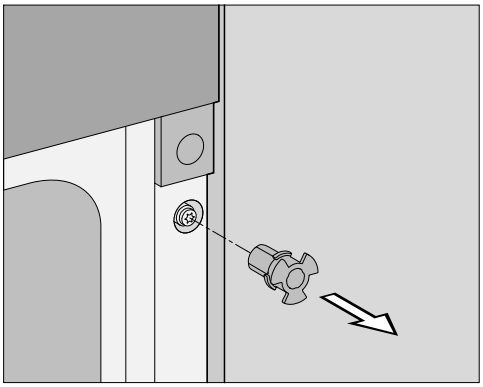

■ Remove the mounting aid.

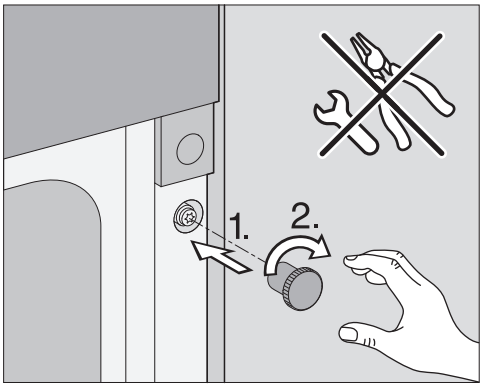

■ Screw the knurled nut onto the bolt by hand to fix the oven in the cabinet niche.

The door may be damaged if the knurled nuts protrude from the front frame.
Make sure that the knurled nuts are flush with the front frame after installation.

■ Repeat this process for the other side.

Reinstall the door, if necessary (see “Cleaning and care of the oven – Installing the door”).

Taking the oven out of the housing unit

■ Open the door.

■ Unscrew the knurled nuts and bolts from the front frame (see “Securing the oven in the housing unit”).
Keep these parts in case the oven needs to be installed again in the future.

■ Pull the oven out of the housing unit.

Do not carry the oven by the door handle. This could damage the door.
Use the recessed grips on each side of the housing to carry the appliance.

■ Take the oven out of the housing unit.

■ Disconnect the oven from the power supply.

Electrical connection

⚠ Risk of injury due to electric shock.
During installation, maintenance, and repair work, the oven must be completely disconnected from the power supply:
Disconnect the oven from the power supply by tripping the breakers, or unplugging the power cord from the outlet. To do this, pull the plug not the cord.

⚠ Risk of injury.
Installation, repairs, and other work by unqualified persons could be dangerous. Miele cannot be held liable for unauthorized work.
Installation, maintenance, and repairs must only be carried out by a Miele authorized technician.

The connection data (voltage and frequency) on the data plate of the oven must match the power supply in order to avoid the risk of damage to the oven.
Compare this before connecting the appliance to the power supply. If in any doubt, consult a qualified electrician.

For safety reasons, the oven may only be used when it has been fully installed.

The power cord plug must be inserted into a suitable outlet that has been installed and grounded in compliance with all applicable local codes.

WARNING: THIS APPLIANCE MUST BE GROUNDED

Installer: Please pass these instructions on to the customer.

Electrical connection

The oven is equipped with a power cord approx. 6 ft (1.8 m) long with a 4-pin NEMA 14-30P plug for connection to a power supply with:

- 2NAC 208 V, 30 A, 60 Hz

  or

- 2NAC 240 V, 30 A, 60 Hz

Temporary or permanent operation on an autonomous power supply system or a power supply system that is not synchronized with the grid power supply (e.g., island networks, back-up systems) is possible. A prerequisite for operation is that the power supply system complies with the specifications of EN 50160 or an equivalent standard. The function and operation of the protective measures provided in the domestic electrical installation and in this Miele product must also be maintained in isolated operation or in operation that is not synchronized with the grid power supply, or these measures must be replaced by equivalent measures in the installation. As described, for example, in the current version of VDE-AR-E 2510-2.

You can set the voltage variant (see “Settings – Electrical version”).

KEEP THE OPERATING AND INSTALLATION INSTRUCTIONS IN A SAFE PLACE.

Radio Module

This device contains the following WiFi module:

FCC ID	2AC7Z-EK057
IC ID	21098-EK057
Frequency band	2.412 GHz – 2.462 GHz
Maximum transmitting power	< 0.2 W

Compliance Statement

This device complies with Part 15 of the FCC Rules and contains licence-exempt transmitter(s)/receiver(s) that comply with Innovation, Science and Economic Development Canada's licence-exempt RSS Standard(s).
Operation is subject to the following two conditions:
(1) this device may not cause harmful interference, and
(2) this device must accept any interference received, including interference that may cause undesired operation.

The construction of the device assures that the FCC/IC exposure limits are verifiably met using the integrated radio module.

⚠ Warning!
Any changes or modifications to this unit not expressly approved by the party responsible for compliance could void the user's authority to operate the equipment.

Copyrights and licenses for the communication module

For the purpose of operating and controlling the communication module, Miele uses proprietary or third-party software that is not covered by open source licensing terms. This software/ these software components are protected by copyright. The copyrights held by Miele and third parties must be respected.

This communication module contains software components which are distributed under open source license conditions. The open source components contained in the appliance along with the corresponding copyright notices, copies of the licensing terms valid at the time, and any additional information can be accessed locally via *http://<IP address>/Licenses*. The liability and warranty arrangements for the open source licenses displayed in this location only apply in relation to the respective rights holders.

Please have the model and serial number of your appliance available when contacting Customer Service.

U.S.A.

Miele, Inc.

National Headquarters
9 Independence Way
Princeton, NJ 08540
www.mieleusa.com

Customer Support
Phone: 888-99-MIELE (64353)
info@mieleusa.com

International Headquarters
Miele & Cie. KG
Carl-Miele-Straße 29
33332 Gütersloh
Germany

Canada

Importer
Miele Limited

Headquarters and Miele Centre
161 Four Valley Drive
Vaughan, ON L4K 4V8
www.miele.ca

Customer Care Centre
Phone: 1-800-565-6435
905-532-2272
contact@miele-support.ca

Miele

H 7263 BP

en-US, CA

M.-Nr. 11 899 991 / 02