Miele

Operating instructions
Dishwashers

To avoid the risk of accidents or damage to the appliance, it is **essential** to read these instructions as well as the installation sheet before it is installed and used for the first time.

en-GB HG07-W M.-Nr. 12 781 040

Contents

Warning and safety instructions **6**

Notes on the operating instructions **14**
Notes on the layout 14
Scope 15
Optional accessories 15

Guide to the appliance **16**
Appliance overview 16
Lower basket (depending on the model) 17
Control field 18
Display functions 19

Caring for the environment **20**

Before using for the first time **21**
Opening the door 21
Closing the door 21
Networking 22
Basic settings 22
- Setting the language 22
- Requirements for networking 22
- Setting up Miele@home 23
- Setting the time of day 23
- Setting the water hardness level 23
- Activating AutoDos 24

Dishwasher salt 24
- Filling the salt reservoir 25
- Refilling salt 26

Rinse aid 27
- Adding rinse aid 28
- Filling the rinse aid reservoir 28

Settings **29**
Opening the settings menu 29
Changing settings 29
Closing the settings menu 29
Language ⚑ 30
Time of day 30
Water hardness 30
AutoDos (automatic dispensing) 31
Rinse aid 31
Save Extras 31
Miele@home 32
- Performing Scan & Connect 32

Remote control 33

RemoteUpdate ... 34
SmartStart ... 35
EcoStart ... 35
Consumption display (EcoFeedback) ... 37
Display brightness ... 37
Volume ... 37
Refill reminders ... 38
AutoOpen ... 38
2nd interim rinse ... 39
Hygiene cycle ... 39
Heat accumulator ... 39
Water connection ... 39
Information ... 40
Showroom ... 40
Factory default ... 40
Copyrights and licences for the communication module ... 40

Caring for the environment ... 41
Economical dishwashing ... 41
Consumption indicator ... 42
Heat accumulator ... 43

Loading the dishwasher ... 44
General information ... 44
Upper basket (depending on the model) ... 46
Adjusting the upper basket ... 49
Lower basket (depending on the model) ... 50
Cutlery tray/cutlery basket (depending on model) ... 54
Loading the 3D MultiFlex tray ... 54
Loading the cutlery basket (if present) ... 55
Loading examples (depending on the model) ... 56
Dishwashers with cutlery tray ... 56
Dishwashers with cutlery basket ... 58

Detergent ... 60
Active ingredients ... 60
Detergent dosage ... 61
Automatic dispensing/AutoDos ... 61
Activating AutoDos ... 61
Inserting a PowerDisk ... 62
Manual detergent dispensing ... 63
Dispensing detergent ... 63
Adding detergent ... 64

Contents

Operation **65**
Switching on the dishwasher 65
Selecting a programme 65
Display of programme duration 66
Starting the programme 66
End of the programme 66
Energy management 67
Switching off the dishwasher 67
Unloading the dishwasher 68
Interrupting a programme 68
Cancelling or changing a programme 68

Options **69**
Timer 69
Activating MobileStart 73
Displaying the operating hours 73

Guide for selecting a programme **74**

Programme overview **76**
Further programmes 78

Extras **79**
Selecting extras 79
Selecting Quick 80

Cleaning and care **81**
Cleaning the wash cabinet 81
Cleaning the door and the door seal 81
Cleaning the control field 82
Cleaning the reflector panel 82
Cleaning the appliance front 82
Cleaning the AutoDos 83
Cleaning the spray arms 84
Checking the filters in the wash cabinet 87
Cleaning the filters 88
Cleaning the water inlet filter 89
Cleaning the drain pump 90

Problem solving guide **91**
Technical problems 91
Fault messages 92
Door release 93
Water inlet fault 93
Water drainage fault 94
Fault in the AutoDos (automatic dispensing) 95

Spray arm fault 97
General problems with the dishwasher 97
Noises 98
Unsatisfactory washing result 99

Service 103
Contact in the event of a fault 103
EPREL database 104
Warranty 104
Note for test institutes 104

Installation 105
The Miele Waterproof system 105
Water inlet 105
For Germany only 106
Water drainage 107
Electrical connection 108

Technical data 109
EU Conformity declaration 110
UK Conformity declaration 110

This dishwasher conforms to current safety requirements. Inappropriate use can, however, lead to personal injury and material damage.

Please observe the installation sheet and read the operating instructions carefully before setting up the dishwasher and using it for the first time. They both contain important information on its installation, safety, use and maintenance. This is to protect yourself from injury and prevent damage to the dishwasher.

In accordance with standard IEC 60335-1, Miele expressly and strongly advises that you read and follow the instructions in the chapter on installing the dishwasher as well as the safety instructions and warnings.
Miele cannot be held liable for damage caused by non-compliance with these instructions.

Keep the installation sheet and the operating instructions in a safe place and pass them on to any future owner.

Appropriate use

▶ This dishwasher is intended for use in the home and in similar environments, such as
– shops, offices and similar work settings
– agricultural estates
– by guests in hotels, motels, bed and breakfasts, and other typical domestic settings.

▶ This dishwasher is not intended for outdoor use.

▶ This dishwasher is intended for use at altitudes of up to 4000 m above sea level.

▶ This dishwasher must only be used for cleaning domestic crockery and cutlery. All other types of use are not permitted.

▶ The appliance can only be used by people with reduced physical, sensory or mental capabilities, or lack of experience and knowledge, if they are supervised whilst using it, or have been shown how to use it in a safe way and recognise and understand the consequences of incorrect operation.

Safety with children

▶ Children under 8 years of age must be kept away from the dishwasher unless they are constantly supervised.

▶ Children aged 8 and older may only use the dishwasher without supervision if they have been shown how to use it in a safe manner. Children must be able to understand and recognise the possible dangers caused by incorrect operation.

▶ Children must not be allowed to clean or maintain the dishwasher unsupervised.

▶ Children should be supervised in the vicinity of the dishwasher. Never allow children to play with the dishwasher. There is a danger that children might shut themselves in the dishwasher.

▶ If the automatic door opening mechanism is active, keep young children away from the area in which the door opens. There is a danger of injury in the unlikely event of a fault with the opening mechanism.

▶ Danger of suffocation! Whilst playing, children may become entangled in packaging material (such as plastic wrapping) or pull it over their head and risk suffocation. Keep packaging material away from children.

▶ Keep children away from detergents. Detergents cause severe skin burns and severe eye damage. They can cause burning in the mouth and throat, or inhibit breathing. It is therefore important to keep children away from the dishwasher when the door is open. Detergent residues could still be present in the dishwasher. Seek medical advice immediately if a child has swallowed or inhaled any detergents.

Technical safety

▶ Unauthorised installation, maintenance or repairs could result in unforeseen dangers for the user, for which the manufacturer cannot accept liability. Installation, maintenance or repairs must only be carried out by a qualified specialist or Miele Customer Service.

▶ Damage to the dishwasher can compromise your safety. Before using the dishwasher and in particular following transport, check it for any visible damage. Never use a damaged dishwasher.

▶ The electrical safety of this dishwasher can only be guaranteed when correctly earthed. It is most important that this basic safety requirement is present. If in doubt, the electrical installation should be checked by a qualified electrician.
Miele cannot be held liable for the consequences of an inadequate or lack of earthing system (e.g. electric shock).

▶ Temporary or permanent operation on an autonomous power supply system or a power supply system that is not synchronised with the mains power supply (e.g. island networks, back-up systems) is possible. A prerequisite for operation is that the power supply system complies with the specifications of EN 50160 or an equivalent standard.
The function and operation of the protective measures provided in the domestic electrical installation and in this Miele product must also be maintained in isolated operation or in operation that is not synchronised with the mains power supply, or these measures must be replaced by equivalent measures in the installation. As described, for example, in the current version of BS OHSAS 18001–2 ISO 45001.

▶ The dishwasher must only be plugged into the electricity supply via a suitable switched socket using a fused 3-pin plug (it must not be hard-wired). The electrical socket must be easily accessible after the dishwasher is installed so that it can be disconnected from the electricity supply at any time.

▶ There must be no electrical sockets behind the dishwasher because the building-in niche may be too small. Danger of overheating and fire risk if the dishwasher were to be pushed up against a plug.

▶ The dishwasher must not be installed underneath a hob. The high temperatures radiated by hobs could damage the dishwasher below. For the same reason, the appliance must not be installed next to open fires or other appliances that give off heat, such as heaters etc., not normally found in a kitchen.

▶ Ensure that the connection data on the dishwasher's data plate (fuse rating, frequency and voltage) match the mains electricity supply. This data must correspond in order to avoid the risk of damage to the dishwasher. Compare these before connecting the appliance to the mains. If in any doubt, consult a qualified electrician.

▶ Do not connect the dishwasher to the mains supply until it has been fully installed and any adjustment has been made to the door springs.

▶ The dishwasher may only be operated if the door opening mechanism is working correctly. Otherwise, there could be a risk of danger whilst the automatic door opening mechanism is active.
Signs that the door opening mechanism is working correctly:

- The door springs must be evenly adjusted on both sides. They are correctly adjusted when the door remains stationary when left half open (approx. 45° opening angle). It is also important that the door cannot fall open.
- The door locking pins automatically retract when the door opens at the end of the drying phase.

▶ Multi-socket adapters and extension leads do not guarantee the required safety of the appliance (fire hazard). Do not connect the dishwasher to the mains electricity supply using a multi-socket adapter or an extension lead.

▶ The dishwasher must not be used in a non-stationary location (e.g. on a ship).

▶ Do not install the dishwasher in a room where there is a risk of frost occurring. Frozen hoses are at risk of tearing or bursting. The reliability of the electronic control unit may be impaired at temperatures below freezing point.

▶ To avoid any damage to the dishwasher, it must only be operated when it is connected to a fully vented plumbing system.

▶ The plastic housing of the water connection contains a solenoid valve. The housing must not be dipped in water.

▶ There are live wires in the water inlet hose. Do not cut the hose, even if it is too long.

▶ The integrated Miele water protection system (Waterproof system) offers protection from water damage, provided that the following conditions are met:

- Installation has been carried out correctly.
- The dishwasher is properly maintained and parts are replaced where this is noticeably required.
- The stopcock is turned off during longer absences from the home (e.g. whilst on holiday).

The water protection system will work even when the dishwasher is switched off. However, the dishwasher must remain connected to the mains power supply.

▶ The water-connection pressure needs to be between 50 and 1,000 kPa.

▶ A damaged dishwasher could be dangerous. Never use a damaged dishwasher. Contact a qualified specialist or Miele Customer Service for repair.

▶ The manufacturer's warranty will be invalidated if the dishwasher is not repaired by a qualified specialist or Miele Customer Service.

▶ If defective safety-relevant components are replaced, Miele can only guarantee full compliance with safety requirements if genuine Miele replacement parts are used.

▶ During installation, maintenance and repair work, the dishwasher must be disconnected from the mains power supply (switch it off and withdraw the mains plug from the socket).

▶ If the mains connection cable is damaged, it must only be replaced with a specific mains connection cable of the same type (available from the Miele online shop or Miele Customer Service). For safety reasons, such replacement may only be carried out by a qualified specialist or Miele Customer Service.

▶ This dishwasher is supplied with a special lamp (depending on the model) to cope with particular conditions (e.g. in terms of temperature, moisture, chemical resistance, abrasion resistance and vibration). This lamp must only be used for the purpose for which it is intended. The lamp is not suitable for room lighting. Replacement lamps may only be fitted by a Miele authorised technician or by the Miele Customer Service Department.

Correct installation

▶ The dishwasher must be installed and connected in compliance with the supplied installation sheet.

▶ Be careful before and while installing the dishwasher. Some metal parts pose a risk of injury/being cut. Wear protective gloves.

▶ The way in which the dishwasher is installed must not cause doors to be blocked when the door is automatically opened (AutoOpen function).

▶ If the dishwasher is being used behind closed furniture fronts (e.g. doors), ensure that the automatic door opening mechanism is not blocked.
The housing units used must be sufficiently resistant to moisture.
The installation space must be well ventilated.

▶ The dishwasher must be correctly aligned horizontally to ensure problem-free operation.

▶ In order to ensure stability, built-under and integrated dishwashers must only be installed under a continuous worktop that is secured to adjacent cabinetry.
In addition, the dishwasher must be screwed to the adjacent cabinetry (see Installation sheet).

▶ A sink in the adjacent cabinet of the dishwasher must be carefully sealed. Regularly check for leaks to avoid damage to the dishwasher.

▶ The dishwasher must only be built into a tall unit if additional safety precautions are taken. In order to safely install the appliance in a tall unit, please use the Tall unit installation kit and observe the installation sheet provided. Otherwise there is the danger of the unit tipping over.

▶ The door springs must be evenly adjusted on both sides. The door springs are correctly adjusted when a half-opened door (approx. 45° opening angle) remains in that position when released. It is also important that the door cannot fall open.
The dishwasher must only be operated with properly adjusted door springs.
If the door cannot be adjusted properly, contact a qualified specialist or Miele Customer Service.

The minimum/maximum weight of the front panel is quoted in the technical data for your dishwasher on the Miele website.

Correct use

▶ Do not use solvents in the dishwasher. Risk of explosion.

▶ Dishwasher detergents can cause burning on the skin and in the eyes, nose, mouth and throat. Avoid contact with detergents. Do not inhale powder detergents. Do not swallow dishwasher detergents. Seek medical attention immediately if detergent has been swallowed or inhaled.

▶ Avoid leaving the dishwasher door open unnecessarily. You could injure yourself on the open door or trip over it.

▶ Do not sit or lean on the open door. The dishwasher can tip over. This can injure you or damage the dishwasher.
When fully loaded baskets are pulled out, even small additional loads on the open door can cause the dishwasher to tip over.

▶ Crockery may be very hot at the end of the programme. Allow the dishes to cool until they are comfortable enough to handle before unloading them.

▶ Only use detergent and rinse aid formulated for domestic dishwashers. Do not use washing-up liquid.

▶ Do not use any commercial or industrial detergents. These may cause material damage, and there is a risk of a severe explosive chemical reaction (such as an explosive oxyhydrogen gas reaction).

▶ Do not fill the rinse aid reservoir with powder or liquid detergent. This will cause damage to the reservoir.

▶ Do not fill the AutoDos with powder or liquid detergent. Loose detergent will damage the AutoDos.

▶ Do not fill the salt reservoir with powder or liquid detergent. Detergent will damage the water softener.

▶ Only use special coarse-grained dishwasher salt or other pure kitchen salt for reactivation. Other salts may contain insoluble additives that can impair the functioning of the water softener.

▶ In dishwashers with a cutlery basket (depending on the model), knives and forks should be placed with the handles upwards in the basket for safety reasons. Knives and forks placed with the handles downwards pose a danger of injury.

▶ Plastic items that cannot withstand being washed in hot water, such as disposable plastic containers or plastic cutlery, should not be cleaned in the dishwasher. The high temperatures in the dishwasher may cause them to melt or lose shape.

▶ If you use the timer option, the detergent compartment must be dry. If it is not, wipe the detergent compartment until dry. The detergent will clump together if the detergent compartment is not dry, and this may mean that it is not fully rinsed out.

▶ Please observe the information given in the “Technical data” chapter regarding the capacity of the dishwasher.

Accessories and spare parts

▶ Miele assumes no liability for the use of accessories that are not genuine Miele accessories. Miele is not liable for warranty, guarantee and/or product liability claims if damage or defects are due to the use or installation of accessories that do not originate from Miele or have not been approved by Miele.

▶ Miele original spare parts are kept in stock for at least 10 years and up to 15 years after discontinuation of your dishwasher.

Transport

▶ Damage to the dishwasher can compromise your safety. Before using the dishwasher, check it for any visible transport damage. Never use a damaged dishwasher.

▶ Only transport the dishwasher in an upright position so that no water flows into the electrical controls, as this would cause faults.

▶ If you wish to transport the dishwasher, empty it and securely fasten all loose parts such as baskets, hoses and mains connection cables.

Notes on the operating instructions

These operating instructions apply to several different dishwasher models of different heights.
The different dishwasher models will be named as follows:
normal = dishwasher measuring 80.5 cm high (built-in appliance) or 84.5 cm high (freestanding appliance)
XXL = dishwasher measuring 84.5 cm high (built-in appliance).

Notes on the layout

Warnings

⚠ Information which is important for safety is highlighted in a thick framed box with a warning symbol. This alerts you to the potential danger of injury to people or damage to property.

Read these warning notes carefully and observe the procedural instructions and codes of practice they describe.

Notes

Notes provide information of particular importance that must be observed.

They are highlighted in a thick framed box.

Additional information and comments

Additional information and comments are highlighted in a box framed with a single black line.

Instructions for the user

Instructions on how to operate the dishwasher are identified by marked operating steps. They explain the procedure step by step.
Operating steps are indicated by a black square bullet point.

Example:
■ Select the desired setting and press *OK* to confirm.

Display

Information given via the dishwasher display appears in a special display font to match the font on the appliance.

Example:
When the message Close the door appears in the display ...

Scope

The appliance is supplied with:

- Dishwasher
- Operating instructions for operating the dishwasher
- Installation sheet for installing the dishwasher
- Other installation accessories for installing the dishwasher (see installation sheet)
- Funnel for filling the dishwasher salt
- Additional printed matter and add-ons if required

Optional accessories

Products specially tailored to your dishwasher – such as dishwasher detergent, cleaning agents, care products and accessories – are available from the Miele online shop, from Miele Customer Service or from your Miele dealer.

You can access the Miele online shop via the following QR code:

Guide to the appliance

Appliance overview

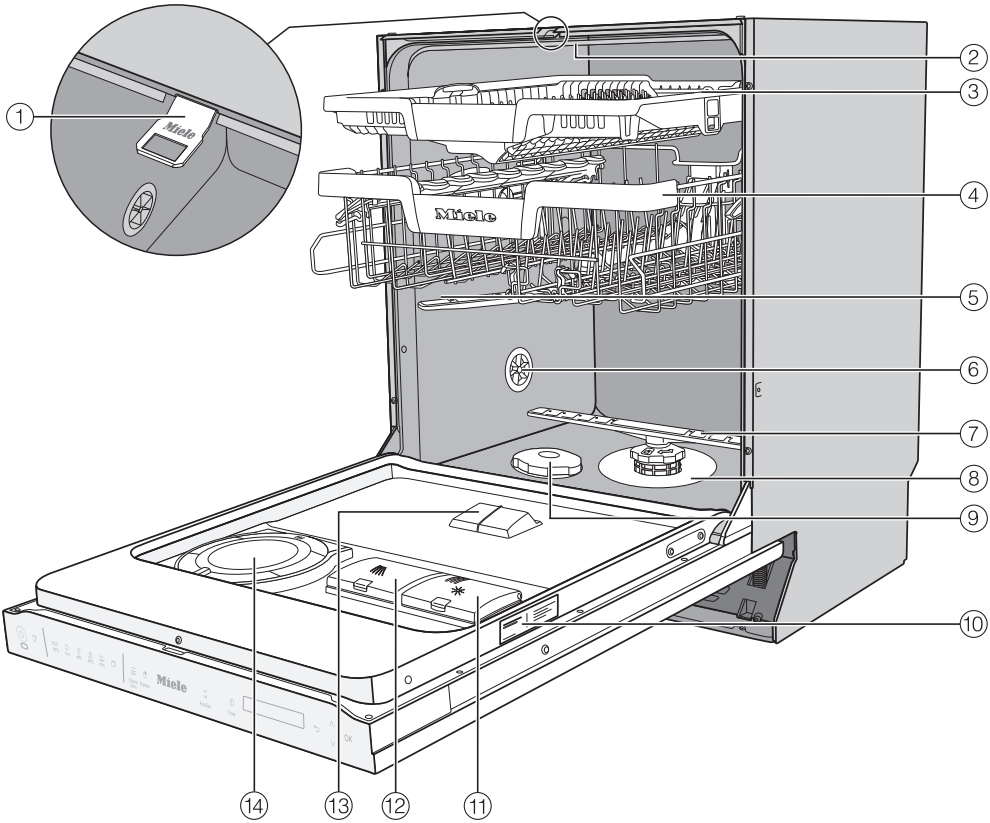

① Door locking pins
② Top spray arm
③ 3D MultiFlex cutlery tray
④ Upper basket (depending on model)
⑤ Middle spray arm
⑥ Aeration valve
⑦ Bottom spray arm
⑧ Filter combination
⑨ Salt reservoir
⑩ Data plate
⑪ Rinse aid reservoir
⑫ Detergent compartment
⑬ AutoDos detergent outlet
⑭ AutoDos (automatic dispensing)

Lower basket (see next page)

Lower basket (depending on the model)

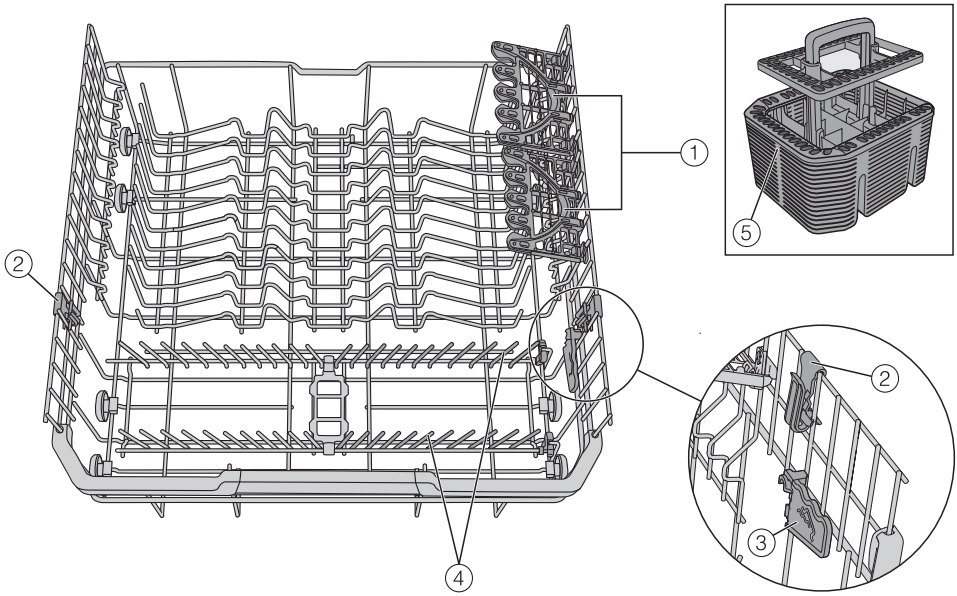

① FlexCare Glass & Bottle

② MultiClip

③ XL-Assist

④ Hinged spikes

⑤ Cutlery basket (depending on the model)

Guide to the appliance

Control field

① *On/Off* sensor control
For switching the dishwasher on and off.

② Optical in-operation indicator light
For indicating an ongoing wash programme when the door is closed.

③ *MobileStart* sensor control
for activating/deactivating the MobileStart option

④ Programme selection

ECO	= ECO
Auto	= Auto 45–60 °C
45 °C	= ComfortWash 45 °C
60 °C	= PowerWash 60 °C
75 °C	= Intensive 75 °C
	= Further programmes/ settings

⑤ *Extras* sensor control
for selecting extras

⑥ *Quick* sensor control
for reducing the programme running time

⑦ *AutoDos* sensor control
For activating/deactivating the AutoDos dispensing system.

⑧ *Timer* sensor control
For selecting a later programme start.

⑨ Display
For further information, see “Guide to the appliance” in the “Display functions” section.

⑩ *Back* sensor control
For navigating back to the previous menu or deleting values that have been set previously.

⑪ ∨∧ sensor controls
for selecting “further programmes”
for changing the values displayed
for scrolling to other menu pages

⑫ *OK* sensor control
for selecting menu options and values displayed.
for confirming messages.

Display functions

The display is used to select or set the following:

- The programme
- The timer
- The Settings ⚑

The display can show the following:

- The programme stage
- The estimated time left for the programme to run
- The energy and water consumption (EcoFeedback)
- Any relevant fault messages and information

To save energy, the dishwasher switches off after a few minutes if you do not press any sensor controls during this time.
Touch the ⏻ sensor control to switch the dishwasher back on.

The *OK* sensor control is used to confirm a message, setting or programme and also to move to the next menu or another level.

Under ⧉ *Further programmes/settings*, a scroll bar ▮ will appear in the right of the display. This offers further options. These options can be shown using the ∨∧ sensor controls.

You can alter the dishwasher's controls to suit changing requirements in the Settings menu (see "Settings").

The option that is selected will have a tick ✓ next to it.

To exit a sub-menu again, use the ⮌ *Back* sensor control.

If you do not press any sensor controls for several seconds, the display will revert to the previous menu level. You may then have to enter your settings again.

Caring for the environment

Disposing of the packaging material

The packaging material is used for handling and protects the appliance from transport damage.

Recycling the packaging material reduces the use of raw materials. Use material-specific collection points for valuable materials and take advantage of return options. Your Miele dealer will take the packaging material away.

Disposing of your old appliance

Electrical and electronic appliances contain many valuable materials. They also contain certain materials, compounds and components which were essential for their correct functioning and safety. These could be hazardous to human health and to the environment if disposed of with household waste or if handled incorrectly. Please do not, therefore, dispose of your old appliance with household waste.

Instead, please make use of officially designated collection and disposal points to dispose of and recycle electrical and electronic appliances in your local community, with your dealer or with Miele, free of charge. By law, you are solely responsible for deleting any personal data from the old appliance prior to disposal. You are legally obliged to remove any old batteries which are not securely enclosed by the appliance and to remove any lamps without destroying them, where this is possible. These must be taken to a suitable collection point where they can be handed in free of charge. Please ensure that your old appliance poses no risk to children while being stored for disposal.

Every dishwasher is tested at the factory. There will be residual water in the appliance from this test. It is not an indication that the dishwasher has been used previously.

Opening the door

In some programmes the door automatically opens slightly to assist the drying process.
This function can be deactivated, if preferred (see “Settings – AutoOpen”).

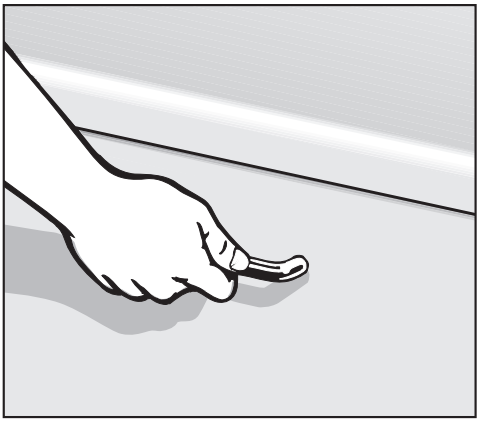

- Pull the handle firmly to open the door.
- Open the door fully to disengage the locking mechanism.

At the end of the programme, if the AutoOpen function is on, the door locking pins automatically retract.
The door locking pin must be fully retracted before you close the door again.

To prevent a technical fault, do not hold the door locking pins firmly when they are retracting.

If the door is opened during operation all wash functions are automatically interrupted.

⚠ Risk of scalding due to hot water.
During operation, water in the dishwasher may be very hot.
During operation, only open the door with extreme caution.

⚠ Risk of injury due to door opening automatically.
The door may open automatically at the end of the programme.
Keep the area around the door free of obstructions.

⚠ Caution: avoid blocking doors.
The automatic door opening function could cause doors to be blocked.
Install the dishwasher so that the door does not block any other doors or furniture fronts when it opens automatically.

Closing the door

- Push the baskets right in.
- Raise the door upwards until the catch engages.

At the end of the programme, if the AutoOpen function switched is on, the door locking pin must be fully retracted before the door is closed. Otherwise, the door locking pin will hit the door.

⚠ Risk of crushing due to the door closing.
When closing the door, you are at risk of shutting your fingers in it.
Do not put your hand inside the door as it is closing.

Networking

Your dishwasher is equipped with an integrated WiFi module. The WiFi module makes it possible to connect to your home network and to use the Miele app on a mobile device.

Once your dishwasher has been connected via WiFi, the connection is automatically re-established every time it is switched on.

Make sure that your WiFi network signal is strong enough in the place where you intend to install your dishwasher.

Connecting your dishwasher to your WiFi network will increase energy consumption, even when the dishwasher is switched off.

Smart Extras via the Miele app*

Networking via the Miele app gives you access to numerous Smart Extras, including:

- Access status information.
- Use additional helpful functions.
- Keep your dishwasher up to date with the latest Miele developments via software updates.

You can find more detailed information about Smart Extras on the Miele website, in the Apple App Store® or in the Google Play Store™.

*This is a separate digital offer from Miele & Cie. KG. The range of functions can vary depending on the model and the country. Acceptance of the Terms and Conditions and Privacy Policy for Miele digital products & services in the Miele app required. Miele reserves the right to change or discontinue the digital offer at any time.

Basic settings

Switching on the dishwasher

- Open the door.
- Switch the dishwasher on using the ⏻ sensor control.

The welcome screen will appear when the dishwasher is switched on and the welcome melody will sound.

For further information about the display functionality, see “Guide to the appliance – Display functions”.

Setting the language

The display will then change automatically to the screen for setting the language.

- Select the language you want as well as the country, if appropriate, using the ∨∧ sensor controls and confirm with *OK*.

For further information on setting the language, see the “Settings” chapter under the “Language” section.

A tick ✓ will appear next to the language that has been set.

Requirements for networking

Note the following requirements for networking:

1. A home network is available at the installation site.
   Have the WiFi password ready.
2. The Miele app is available on a mobile device.
3. You have a user account in the Miele app.

Miele App

The Miele App is available to download free of charge from the Apple App Store® or from the Google Play Store™.

Download on the App Store

ANDROID APP ON Google Play

Setting up Miele@home

The message Set up Miele@home will appear in the display.

- To set up Miele@home now, confirm by touching *OK*.

Tip: To postpone setup until later, select the option Skip and confirm by touching *OK*.

There are two ways of connecting your dishwasher to your WiFi network:

- Select the connection method you want and confirm your choice with *OK*.

1. Connect using App
2. Connect using WPS

You will then be guided by the display and the Miele app.

For further information on Miele@home, see the “Settings” chapter under the “Miele@home” section.

Setting the time of day

The time of day is set automatically if a connection is established with the WiFi network.

The display will then change to the screen for setting the time of day.

The current time of day must be set before you can use the timer option.

- Use the ∨∧ sensor controls to enter the hour and confirm your entry by touching *OK*.
- Then set the minutes and confirm with *OK*.

Holding down the relevant ∨ or ∧ sensor control will increase or decrease the time automatically.

Setting the water hardness level

The display will change to the screen for setting the water hardness.

- You should programme the dishwasher to the correct water hardness for your area.
- Your local water authority will be able to advise you of the water hardness level in your area.
- Where the water hardness fluctuates e.g. between 1.8 and 2.7 mmol/l (10 - 15 °dH - German scale) always programme the dishwasher to the higher value (2.7 mmol/l or 15 °dH in this example).

In the event of a fault, it will help the service technician if you know the hardness of your local water supply.

Therefore, please enter the water hardness:

_____°dH or mmol/l

The dishwasher is programmed at the factory for a water hardness level of 2.5 mmol/l (14 °dH – German scale).

- Set the water hardness level in your area and confirm using *OK*.

See the “Settings” chapter, “Water hardness” section for more information.

Activating AutoDos

The display changes to the settings screen for AutoDos (see “Detergent – Automatic dispensing/AutoDos”).

Even if you do not wish to use AutoDos, you must remove the tag from the AutoDos lid before running the first programme sequence (see “Detergent – Activating AutoDos”).

You can activate AutoDos.
If you do not wish to use AutoDos (automatic dispensing), you can manually dispense the detergent via the detergent compartment (see “Detergent – Manual detergent dispensing”).

- Select the setting you want and confirm with *OK*.

This setting applies to all programmes and you can change it at any time using the *AutoDos* sensor control.

Finally, prompts will appear in the display.

After confirming these prompts with *OK*, the messages Refill salt and Refill rinse aid may appear.

- Add salt and rinse aid if necessary (see “Before using for the first time – Dishwasher salt” and “Rinse aid”).
- Select *OK* to confirm the messages.

The programme selected will appear briefly in the display and the appropriate sensor control will be illuminated.
Next, the estimated energy and water consumption may be shown for the chosen programme for several seconds.
Then the display will show the estimated running time for the programme selected.

Dishwasher salt

In order to achieve good cleaning results, the dishwasher needs to operate with soft water. Hard water results in the build-up of calcium deposits on crockery and on the wash cabinet walls. Mains water with a water hardness level higher than 0.9 mmol/l (5 °dH – German scale) must be softened. This occurs automatically in the integrated water softener. The water softener is suitable for a water hardness level of up to 12.6 mmol/l (70 °dH – German scale).

In order to maintain the functions of the water softener, it must be reactivated regularly. Reactivation occurs automatically every ninth programme sequence. At the start of the next programme, an additional 4.4 l of water is required for this process. Energy consumption increases by 0.015 kWh and the programme is extended by approx. 3 minutes.
The above applies to the ECO programme at a water hardness of 2.5 mmol/l (14 °dH – German scale).
For other programmes and water hardness levels, only the frequency of reactivation will differ.

In order to be reactivated, the water softener requires dishwasher salt. Depending on the water hardness level (< 3.8 mmol/l, or < 21 °dH – German scale), dishwasher salt is not required if combination detergents are being used (see “Detergent – Powder detergent and detergent tabs”).

In the UK, the use of dishwasher salt is recommended in medium and hard water areas, including when combination detergents are used, to support the water-softening system and optimise detergent performance.

If the water in your area is very soft and constantly **lower than 0.9 mmol/l (5 °dH – German scale)**, you do **not** need to add dishwasher salt. The salt refill indicator will automatically switch off after the water hardness has been set accordingly (see “Settings – Water hardness”).

⚠ Damage to the water softener from detergent.

Detergent will damage the water softener.

Do not fill the salt reservoir with powder or liquid detergent.

⚠ Damage caused by using unsuitable salts.

Some types of salt may contain insoluble components which can cause the water softener to malfunction.

Only use special coarse-grained dishwasher salt or other pure kitchen salt for reactivation.

If you only ever use combination detergent products in your dishwasher, you can turn off both refill reminders if you wish (see “Settings – Refill reminders”).

Please make sure that if you stop using combination detergent products, you refill the dishwasher salt and rinse aid. Switch the refill reminders back on if required.

Filling the salt reservoir

Before filling the salt reservoir for the first time, you must fill it with approx. 1.5 l of water to enable the salt to dissolve.

Once the dishwasher has been commissioned, there is always sufficient water in the salt reservoir.

- Remove the lower basket from the wash cabinet and unscrew the salt reservoir cap.

⚠ Risk of corrosion due to saline solution.

Water or saline solution will run out of the reservoir when the cap is opened. Saline solution that runs out can cause corrosion in the wash cabinet and to the load items.

The salt reservoir should therefore only be opened in order to replenish the salt.

- Fill the salt reservoir with approx. 1.5 l of water (first use only).

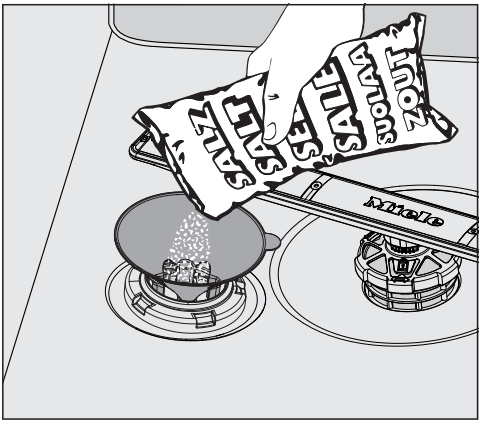

- Place the funnel provided over the salt reservoir and carefully fill with dishwasher salt until the reservoir is full. The salt reservoir holds up to 2 kg of salt, depending on the type of salt used.
- Clean off salt residues from around the salt reservoir opening. Next, screw the salt reservoir cap on again firmly.
- Immediately after filling the salt reservoir and each time you remove the salt reservoir cap, run the Rinse salt programme without load items in the dishwasher to dissolve and remove any traces of salt from the wash cabinet.

Refilling salt

- When the refill reminder ⇄ Refill salt appears in the display, wait until the end of the programme and then refill the salt reservoir.
- Confirm with *OK*.

The salt refill indicator will go out.

> ⚠ Risk of corrosion due to saline solution.
> Saline solution that runs out can cause corrosion in the wash cabinet and to the load items.
> Immediately after filling the salt reservoir and each time you remove the salt reservoir cap, run the Rinse salt programme without load items in the dishwasher to dissolve and remove any traces of salt from the wash cabinet.

After the salt reservoir has been filled, the salt refill indicator may still appear on the display if the salt concentration has not yet reached the correct level. In this case, confirm the message again with *OK*.

The salt refill indicator will be switched off if you have programmed the dishwasher for a water hardness below 0.9 mmol/l (5 °dH – German scale).

Rinse aid

Rinse aid is necessary to ensure that water does not cling and leave marks on crockery during the drying phase, and helps crockery dry faster after it has been washed.
Rinse aid is poured into the container and the amount set is dispensed automatically.

⚠ Washing-up liquid or detergent can cause damage.
Washing-up liquid and detergent can damage the rinse aid container.
Only fill it with rinse aid formulated for domestic dishwashers.

Alternatively, you could use liquid citric acid at a concentration of up to 10 %. The resulting rinsing and drying quality on the crockery will not, however, be as good as when rinse aid is used.

⚠ Risk of acid damage.
The dishwasher can be damaged by high concentrations of acid.
Under no circumstances should you use citric acid with a higher acid content.

If you only ever wish to use combination products in your dishwasher, you do not need to add rinse aid.
However, for optimum rinsing and drying results, use dishwasher detergent and add dishwasher salt and rinse aid separately.

If you only ever use combination detergent products containing salt and rinse aid in your dishwasher, you can switch off both refill reminders if you wish (see “Settings – Refill reminders”).

Please make sure that if you stop using combination detergents, you refill the dishwasher salt and rinse aid. Switch the refill reminders back on if required.

Adding rinse aid

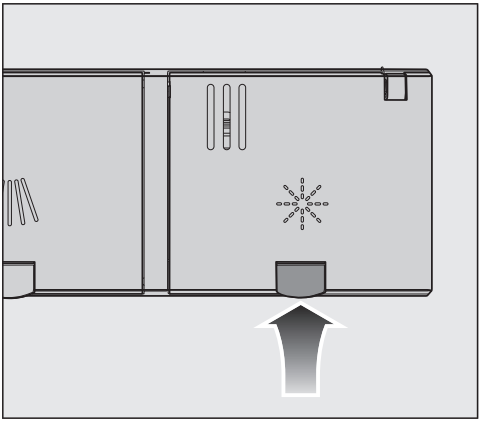

- Press the yellow button on the lid of the rinse aid reservoir.

The lid will spring open.

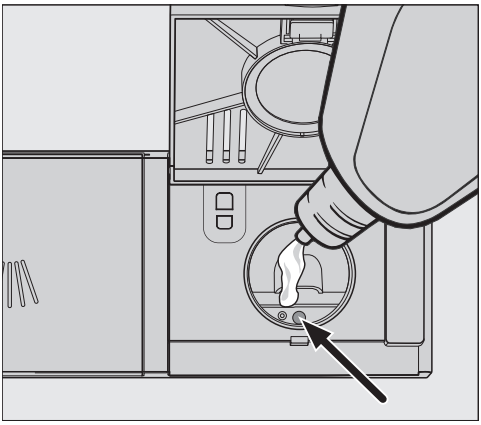

- Fill with rinse aid until the filling level indicator (arrow) changes to a dark colour while the door is horizontally open.

The rinse aid reservoir holds approximately 110 ml.

- Close the lid firmly until you hear it click into place. Otherwise, water can enter the rinse aid reservoir during a programme.
- Wipe up any spilled rinse aid. This prevents excess foam developing during the next programme.

You can adjust the rinse aid dosage for the best wash result (see “Settings” chapter, “Rinse aid” section).

Filling the rinse aid reservoir

When the refill reminder Refill rinse aid appears in the display, the reservoir contains sufficient rinse aid for 2 to 3 programmes only.

- Refill with rinse aid in plenty of time.
- Confirm with *OK*.

The rinse aid refill reminder will disappear.

You can alter the dishwasher's controls to suit changing requirements by adjusting the settings.

The settings can be altered at any time.

Opening the settings menu

- Switch the dishwasher on with the ⏻ sensor control if it is switched off.
- Touch the ⧉ sensor control "Further programmes/settings".

The first of the further programmes will appear in the display.

- Use the ∨∧ sensor controls to select the Settings ⚑ menu option and confirm with *OK*.

The first option in the Settings menu will appear in the display.

For further information about the display functionality, see "Guide to the appliance" chapter, "Display functions" section.

Changing settings

- Use the ∨∧ sensor controls to select the menu option you want to change and confirm your selection with *OK*.

Sub-menu options that have already been selected will have a tick ✓ beside them.

- Select the setting you want using the ∨∧ sensor controls and confirm with *OK*.
- To exit a sub-menu again use the ⮌ Back sensor control.

The display will revert to the menu above.

Closing the settings menu

- Touch the ⮌ sensor control.

The display will change to the ⧉ menu.

Language ⚑

The display can be set to appear in one of several different languages.

You can change the language used in the display and also the country via the Language ⚑ sub-menu.

The flag after the word Language ⚑ serves as a guide if a language that you do not understand has been set.
In this case keep selecting the menu option that has a flag after it until you reach the Language ⚑ sub-menu.

Time of day

The current time of day must be set before you can use the timer option.

Setting the clock format

You can select either a 24-hour or 12-hour clock.

- Select the Clock format menu option.
- Select the desired setting.

Setting the time of day

You can set the current time of day.

- Select the Set menu option.
- Use the ∨∧ sensor controls to enter the hour and confirm your entry by touching *OK*.
  Then set the minutes and confirm with *OK*.

The time of day has now been saved.

Water hardness

Your dishwasher is fitted with a water softener.

- You should programme the dishwasher to the correct water hardness for your area.
- Your local water authority will be able to advise you of the water hardness level in your area.
- Where the water hardness fluctuates e.g. between 1.8 and 2.7 mmol/l (10–15 °dH - German scale) always programme the dishwasher to the higher value (2.7 mmol/l or 15 °dH in this example).

If the water hardness in your area is available in a unit other than °dH, you can convert the values as follows:
1 °dH = 0.18 mmol/l = 1.78 °fH

Setting the water hardness level

- Select the water hardness level in your area and confirm using *OK*.

AutoDos (automatic dispensing)

Automatic dispensing automatically adjusts the amount of detergent to the selected programme. In the *Auto* programme, the quantity is adjusted depending on the degree of soiling of the crockery.

If you want to extend the service life of the PowerDisk, you can reduce the dispensing quantity. The programme's cleaning performance may decrease as a result.
If you want to improve the cleaning performance, you can increase the dispensing quantity. This reduces the service life of the PowerDisk.

Setting the Dosage amount

For best results, you can adjust the dispensing quantity of the PowerDisk.

- Select the Dosage amount menu option.
- Select the desired setting.

Rinse aid

You can adjust the rinse aid dosage for best results.
The rinse aid dosage can be set from 0 to 6 ml.
3 ml is the factory default setting.

The rinse aid dosage can turn out to be higher than the set value due to the automatic adjustment of the programme.

If spots appear on crockery and glassware:

- Increase the rinse aid dosage.

If clouding or smearing appears on crockery and glassware:

- Decrease the rinse aid dosage.

Save Extras

You can set whether the selected extras are to remain permanently activated for the respective programme.

For the *ECO* programme, an extra can only be activated for one programme sequence.

Miele@home

Your dishwasher is equipped with an integrated WiFi module.

You can connect your dishwasher to your WiFi network.
This will increase the energy consumption, even when the dishwasher is switched off.

The “Settings” and “Miele@home settings” menus will be added as additional menu options.

Make sure that your WiFi network signal strength is strong enough at the installation site of your dishwasher.

There are a number of ways of connecting your dishwasher to your WiFi network:

Performing Scan & Connect

Initial commissioning has been carried out without Miele@home having been set up.

- Scan the QR code.

If you have installed the Miele app and have a user account, you will be taken directly to the networking steps.

If you have not yet installed the Miele app, you will be taken to the Apple App Store® or the Google Play Store™.

- Install the Miele app and set up a user account.
- Scan the QR code again.

The Miele app will guide you through the setup process.

Connect using App

The Miele app is available to download free of charge from the Apple App Store® or from the Google Play™ store.

Download on the App Store

ANDROID APP ON Google Play

- Select the Connect using App menu option and confirm with *OK*.
- Follow the instructions in the app.

Once your dishwasher is connected to your WiFi network you can use the app to carry out the following activities:

- Control your dishwasher remotely
- Call up information on the operating status of your dishwasher
- Call up information on the programme sequence of your dishwasher
- Set up a Miele@home network with other WiFi-enabled Miele appliances

Connect using WPS

As an alternative to networking via the Miele app, you can connect your dishwasher to your WiFi network using WPS (Wireless Protected Setup).

Your WiFi router must support WPS.

- Select the Connect using WPS menu option and confirm with *OK*.
- Confirm the message Press WPS button with *OK*.

- Activate the WPS function on your router within 2 minutes.
- Once the connection has been established, confirm the message with *OK*.

If the connection fails, you have probably not activated WPS on your router quickly enough. Repeat the steps above.

Deactivate

If you do not wish to use the WiFi module of your dishwasher, you can switch it off.

- Select the Deactivate menu option.

In the Miele@home menu, the menu option Deactivate will now be displayed instead of Activate.

Activate

If you wish to connect your dishwasher to your WiFi network, you can turn on the WiFi module.

- Select the Activate menu option.

In the Miele@home menu, the menu option Activate will now be displayed instead of Deactivate.

Display Connection status

You can call up the current connection status of your dishwasher.

- Select the Connection status menu option and confirm with *OK*.
- Use the ∨∧ sensor controls to consecutively call up the WiFi signal strength, the name of your router and the associated IP address.
- Select *OK* to confirm the messages.

Set up again

This menu option only appears if you have already connected your dishwasher to your WiFi network.

Connect using App

- Select the Connect using App menu option.
- Follow the user navigation in the app.

Connect using WPS

- Select the Connect using WPS menu option.
- Follow the instructions on the display.

Reset

This menu option only appears if you have already connected your dishwasher to your WiFi network.

You can use this menu option to reset all WiFi module settings to the factory default settings.

The network configuration should be reset whenever a dishwasher is being disposed of or sold, or if a used dishwasher is being put into operation. This is the only way to ensure that all personal data has been removed and the previous owner will no longer be able to access the dishwasher.

- Select the Reset menu option and confirm with *OK*.

Remote control

This menu option will only be displayed if you have connected your dishwasher to your WiFi network (see “Settings – Miele@home”)

If you wish to permanently switch off the Remote control option, you can do so under this menu option. The *MobileStart* sensor control will then no longer be available to select until you change this setting again.

Even if the Remote control option is switched off, you can use the Miele app to call up information about your appli-

ance. However, you cannot start any programmes or change any settings from it.

RemoteUpdate

The RemoteUpdate menu option is only displayed and can only be selected if the requirements for using Miele@home have been met (see “Before using for the first time” chapter, “Miele@home” section).

The RemoteUpdate function is used for updating the software in your dishwasher. If an update is available for your dishwasher, it will automatically download it. Updates will not be installed automatically. They must be initiated manually.

If you do not install an update, you can continue to use your dishwasher as usual. However, Miele recommends installing updates.

Activating/deactivating

The RemoteUpdate function is activated as standard. Available updates will be downloaded automatically and will only be installed if you initiate them.

Deactivate RemoteUpdate if you do not wish any updates to be downloaded automatically.

Running a RemoteUpdate

Information about the content and scope of a RemoteUpdate will be provided in the Miele app.

A message will appear in your dishwasher display if a software update is available.

You can install the update immediately or postpone it until later. When the appliance is switched on again, you will be reminded about the update.

Switch RemoteUpdate off if you do not wish to install updates.

Updates may take several minutes.

Please note the following information about the RemoteUpdate function:

- You will only receive a message when an update is available.
- Once an update has been installed, it cannot be undone.
- Do not switch the dishwasher off during the update. Otherwise, the update will be aborted and will not be installed.
- Some software updates can only be carried out by Miele Service.

SmartStart

This menu option will only be displayed if you have connected your dishwasher to your WiFi network (see “Settings – Miele@home”).

The SmartStart function is used for starting your dishwasher automatically at a time when your energy supplier’s electricity tariff is most economical.

To use this function you may need further technical accessories.

If you have activated SmartStart Permitted, the Timer ⏲ menu of the selected programme will no longer show EcoStart but will instead show SmartStart (see “Options – Timer”). The dishwasher will then start within the timeframe specified when it receives a signal from the energy supplier.
If it has not received a signal from the energy supplier by the latest possible start time, the dishwasher will start automatically.

EcoStart

In order to run your dishwasher in the most economical way, you can use the EcoStart option to take advantage of your electricity supplier’s cheaper energy tariffs (see “Options” chapter, “Timer” section).
With this option selected, your dishwasher will start automatically at your electricity supplier’s cheapest tariff times.

To use this option, you must first set up to three energy tariff time zones in which the dishwasher can start. You can allocate different priorities to these time zones. The time with the cheapest energy tariff will be given Priority 1.

Contact your electricity supplier to find out the times of the cheapest energy tariffs.

Once the energy tariff times have been set, you can use the EcoStart option to set the latest finish time required for each programme.
The dishwasher will then start automatically during the cheapest energy tariff time. The programme will end at the set finish time at the latest.

Setting the electricity tariff times

Before you can use the EcoStart option, you must set at least one electricity tariff time.

- Use the ∨∧ sensor controls to select an electricity tariff time T1–T3 and confirm with *OK*.

The start of the electricity tariff time selected will appear in the display and the hour number block will be highlighted.

- Use the ∨∧ sensor controls to set the hours and minutes for the start time and confirm both with *OK*.

The end of the electricity tariff time selected will appear in the display and the hour number block will be highlighted.

- Use the ∨∧ sensor controls to set the hours and minutes for the end time and confirm both with *OK*.

The electricity tariff time will be saved and its priority will appear in the display.

- Use the ∨∧ sensor controls to set the priority you want and confirm with *OK*.
- Confirm the message with *OK*.

The electricity tariff time will be activated.

Changing the electricity tariff times

You can change the start, end or priority of an electricity tariff time.

- Use the ∨∧ sensor controls to select an electricity tariff time T1–T3 that you wish to change and confirm with *OK*.
- Select the setting you want to change and confirm with *OK*.
- Use the ∨∧ sensor controls to change the setting and confirm with *OK*.
- Confirm the message with *OK*.

The change will be saved.

Deleting the electricity tariff times

You can delete the settings for an electricity tariff time and in doing so deactivate the EcoStart option for this time zone.

- Use the ∨∧ sensor controls to select an electricity tariff time T1–T3 that you wish to delete and confirm with *OK*.
- For example, select Delete T1 and confirm with *OK*.
- For example, select Delete T1? and confirm with *OK*.

The settings for the electricity tariff time selected will be reset.

- Confirm the message with *OK*.

The electricity tariff time will be deleted.

Consumption display (EcoFeedback)

You can set whether the energy and water consumption is displayed for the selected programme. This function shows the estimated consumption before a programme sequence and the actual consumption after the end of the programme (see “Caring for the environment – EcoFeedback consumption indicator”).

Display brightness

You can set the display brightness to one of seven different levels.

Volume

A sequence of buzzer tones will sound at the end of the programme or if there is a fault as long as the buzzer sequence has been activated.

Buzzer in the event of a fault

In the event of a fault, the warning buzzer will sound four times at intervals with a short pause between each set of tones.

> The warning buzzer that sounds when there is a fault cannot be deactivated.

Buzzer tones

The buzzer at the end of a programme will sound four times at intervals with a short pause between each set of tones.

The volume of the buzzer at the end of the programme can be selected from one of seven levels. If no volume is selected, the buzzer is switched off.

Keypad tone

An audible tone sounds each time a sensor control is pressed.

The volume for the keypad tone can be set to one of seven different levels. If no volume is selected, the keypad tone is switched off (except the ⏻ *On/ Off* sensor control).

Welcome melody

If you switch the dishwasher on or off, a brief melody will sound.

You can switch the melody off.

Refill reminders

If you only ever use combination detergent products or automatic dispensing using Miele PowerDisks (if available), you can switch off the refill reminders for dishwasher salt and rinse aid if you wish.

Please make sure that if you stop using combination detergents, you refill the dishwasher salt and rinse aid. Switch the refill reminders back on.

AutoOpen

In some programmes the door automatically opens slightly to assist the drying process.

This function can be deactivated if you wish. However, this negatively affects the drying process in most cases.

⚠ Risk of injury due to door opening automatically.

The door may open automatically at the end of the programme.

Keep the area around the door free of obstructions.

⚠ Risk of damage due to steam.

Steam from the dishwasher could damage delicate housing units and the edges of worktops when you open the door at the end of the programme if the fan is no longer running.

If you have deactivated the automatic door opening function but would still like to open the door at the end of the programme, then make sure that you open the door fully.

2nd interim rinse

You can choose this function to increase the cleaning performance of the programmes with a second interim rinse.

When this function is activated, water consumption may increase.

If this function is switched on, it will be applied to all programmes until it is switched off again (except for the *ECO* programme).

Hygiene cycle

If you mainly use low temperature programmes (< 50 °C), there is a risk of bacteria and unpleasant odours building up in the wash cabinet (see “Cleaning and care – Hygiene cycle”).

If this function is switched on, a message will be displayed recommending the use of a high temperature programme after several low temperature programmes have been run.

Heat accumulator

This dishwasher is equipped with a heat accumulator (see “Caring for the environment – Heat accumulator”).

Empty manually

You can manually empty the heat accumulator, e.g. for a longer period of absence, or before moving the dishwasher to a new location.

- Please ensure that the dishwasher is properly connected.
- Select the Empty manually menu option.

The process starts straight away.

Water connection

You can set your water connection type and control the heat accumulator functions.

- If you select Automatic, the dishwasher detects which water connection is currently being used and automatically selects the right setting.
- Select Cold water, if you have a cold water connection and want to always use the heat accumulator
- Select Warm water, if you have a hot water connection and do not want to use the heat accumulator

Information

You can display the following information about your dishwasher:

- Operating hours (see also “Options – Displaying the operating hours”)
- Programme sequences
- Total consumption
- Fault memory
- Data plate
- Software version

Showroom

For demonstration purposes only.

The dishwasher is equipped with a demo mode for showroom use.

Factory default

You can reset all dishwasher settings to the factory default settings.

WiFi module settings (where applicable) have to be reset separately (see “Settings – Miele@home”).

■ Select Reset and confirm with *OK*.

Copyrights and licences for the communication module

For the purpose of operating and controlling the communication module, Miele uses proprietary or third-party software that is not covered by open source licensing terms. These items of software/software components are protected by copyright. The copyrights held by Miele and third parties must be respected.

Furthermore, this communication module contains software components which are distributed under open source licence conditions. The open source components contained in the appliance along with the corresponding copyright notices, copies of the licensing terms valid at the time, and any further information can be accessed locally via IP using a web browser *(http://<IP address>/Licenses)*. The liability and warranty arrangements for the open source licences displayed in this location only apply in relation to the respective rights holders.

Economical dishwashing

This dishwasher is exceptionally economical in its use of water and electricity.
You can make the most of your appliance by following these tips:

- Washing in a dishwasher generally uses less water and energy than washing by hand.
- There is no need to pre-rinse items under running water, and this unnecessarily increases water and energy consumption.
- For the most economical dishwashing, make full use of the basket capacity without overloading the dishwasher. This results in the most economical dishwashing in terms of energy and water consumption.
- Choose the programme to suit the type of crockery being washed and the degree of soiling (see “Programme overview”).
- Select the *ECO* programme for energy-saving dishwashing. This programme is the most efficient in terms of its combined energy and water consumption for cleaning dishes with a normal level of soiling.
- If you have a hot water connection, choose the *SolarSave* programme (see “Installation – Water inlet”). The wash water will not be heated up during this programme.
- Follow the detergent manufacturer’s recommendations on detergent dosage.
- If you are manually dosing the detergent, reduce the amount of detergent by $^{1}/_{3}$ when using powder or liquid detergent if the baskets are only half full.

Consumption indicator

The Consumption indicator function is used for calling up information about the energy and water consumption of your dishwasher (see “Settings – Consumption indicator”).

The following information can be shown on the display:

- An estimate of the consumption before the programme sequence
- The actual consumption at the end of the programme
- The total consumption of the dishwasher

1. Estimated consumption

After a programme has been selected, first the name of the programme and after a few seconds the estimated energy consumption ⊸ and water consumption 💧 will appear in the display.

The estimated consumption will be shown as a bar chart. The more bars that are visible (▮▮▮), the higher the energy or water consumption.

The values are influenced by the programme, the extras selected, the ambient conditions and the size of the load.

The display will change automatically from showing the estimated consumption to showing the time left display.

The estimated consumption function is activated as standard. This function can be deactivated, though, if preferred (see “Settings – Consumption indicator”).

2. Display consumption

At the end of the programme you can call up the actual amount of energy and water used by the programme that has just been run.

- Confirm the Consumption (OK) message with *OK*.

Switching the dishwasher off at the end of the programme will delete the actual consumption values for the programme that has just been run.

3. Total consumption

You can display the total consumption of energy and water for all previously used programmes of your dishwasher (see “Settings – Information”).

Heat accumulator

This dishwasher is equipped with a heat accumulator, in which fresh water for the programme is pre-heated and stored in order to save energy. The heat accumulator is refilled with fresh water towards the end of each programme. The water is held here ready for the next programme.

If you do not wish to use this function, it can be switched off by setting the Warm water water connection (see “Settings – Water connection”).

If the water in the heat accumulator has not been used for multiple weeks, it will be automatically drained off for hygienic reasons. This procedure takes a few minutes and will occur even with the dishwasher switched off or the door open.
Please ensure that the dishwasher is properly connected.

The display will remain dark while the heat accumulator is drained off. If you touch the ⏻ sensor control, the display will show the message Empty accumulator. Other functions will be unavailable during this procedure.
Automatic emptying cannot be interrupted.
During the subsequent programme sequence, water and energy consumption will be higher.

The heat accumulator can be manually drained for transporting the dishwasher, e.g. when moving house (see “Settings – Heat accumulator”).

The heat accumulator can only be used in conjunction with a cold water connection.

Selecting the hot water connection (see “Settings – Water connection”) deactivates the heat accumulator.

General information

Remove coarse food residues from crockery.

There is no need to pre-rinse items under running water.

⚠ Damage can be caused by ash, sand, wax, lubricating grease or paint. These substances will contaminate the dishwasher and can then no longer be removed.
Do not wash items soiled with these substances in the dishwasher.

Crockery can be loaded anywhere in the baskets, but the following notes should be observed:

- Do not place crockery and cutlery inside other items where they will cover one another.
- Load the crockery so that water can access all surfaces. This ensures that they get properly cleaned.
- Make sure that all items are securely positioned.
- Hollow items such as cups, glasses, pots etc. must be placed upside down in the baskets.
- Tall and narrow hollow items, such as champagne glasses, should be placed in the middle of the basket rather than in the corners. This ensures the hollow items are more easily accessed by the water jets.
- Wide-based items should be placed at an angle so that water can run off them freely.
- The spray arms must not be blocked by items that are too tall or hang through the baskets. Test for free movement by manually rotating the spray arms.
- Make sure that small items cannot fall through the holders in the baskets. Small items such as lids should therefore be placed in the 3D MultiFlex tray or cutlery basket (depending on model).

Some foods may contain natural dyes, e.g. carrots, tomatoes or ketchup. These dyes can discolour plastic items in the dishwasher if large quantities of these foods are in contact with the crockery inside the appliance. The stability of plastic items is not affected by this discolouration.
Washing silverware can also cause plastic items to discolour.

Items not suitable for dishwashers:

- Wooden cutlery and crockery or items with wooden parts: these may discolour and fade. The glue used in these items is not dishwasher-proof and wooden handles may come loose after being washed in a dishwasher.
- Craft items, antiques, valuable vases and decorative glassware: such items are not dishwasher-proof.
- Plastic items that are not heat resistant: the high temperatures in the dishwasher may cause them to melt or lose shape.
- Copper, brass, tin and aluminium items: these may discolour or become dull.

- Colours painted over a glaze: this type of decoration may fade after a number of cycles.
- Delicate glassware and glassware containing lead crystal: clouding may occur over time.

Silverware

⚠ Risk of damage due to unsuitable detergents.
If silverware is cleaned using an unsuitable cleaning agent, it can be irreparably damaged.

Silverware that has been in contact with foods containing sulphur can discolour. These include egg yolk, onions, mayonnaise, mustard, pulses, fish, fish brine and marinades.
Silverware previously cleaned with a **silver polish** may still be damp or spotted at the end of a programme, where water has not run off smoothly.

Tip: Rub the silver dry with a cloth.

⚠ Damage due to caustic alkaline cleaning agents.
Aluminium parts (e.g. the grease filters of cooker hoods) can be damaged by caustic alkaline cleaning agents. In extreme cases, there is a risk of an explosive chemical reaction (such as an explosive oxyhydrogen gas reaction).
Aluminium components must not be cleaned in the dishwasher with caustic alkaline commercial or industrial cleaning agents.

Tip: When purchasing new crockery and cutlery, make sure they are dishwasher-proof if you want to wash them in the dishwasher.

Glass care

- Clouding may occur on glasses after frequent washing in the dishwasher. When washing delicate glassware in the dishwasher, ensure that only a special glass care programme with very low temperatures is selected (see “Programme overview”). This will reduce the risk of clouding.
- Purchase glassware that is dishwasher-safe (e.g. Riedel glassware).
- Use detergents with glass protective additives.

Upper basket (depending on the model)

See “Loading the dishwasher – Loading examples” for examples of how to load crockery and cutlery.

Loading the upper basket

⚠ Damage due to leaking water.
If you run the dishwasher without the upper basket, water can leak out of the dishwasher.
Only run the dishwasher with the upper basket in place (except during the Tall items programme, if available).

- Use the upper basket for small, lightweight and delicate items such as cups, saucers, glasses and dessert bowls.
  Shallow pots can also be placed in the upper basket.
- Long items such as ladles and mixing spoons should be placed lying down across the front of the upper basket.

Loading the FlexCare cup rack

You can put cups, small bowls and flat crockery on the FlexCare cup rack. Glasses can be arranged along the cup rack so they sit securely during the programme.

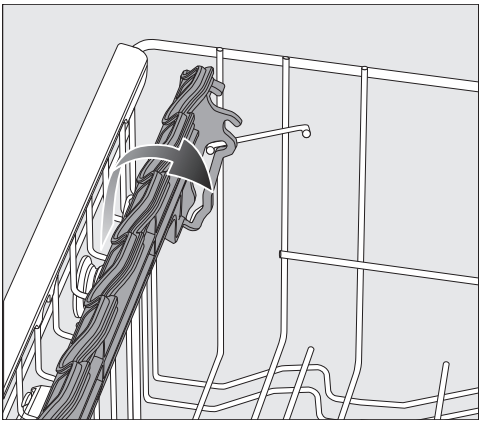

- Lower the FlexCare cup rack to do so.
- Raise the cup rack upwards to make room for tall items.

Adjusting the FlexCare cup rack

You can set the height and depth of the cup rack at two different levels. so that it can accommodate larger cups and so that taller crockery can be placed underneath it.

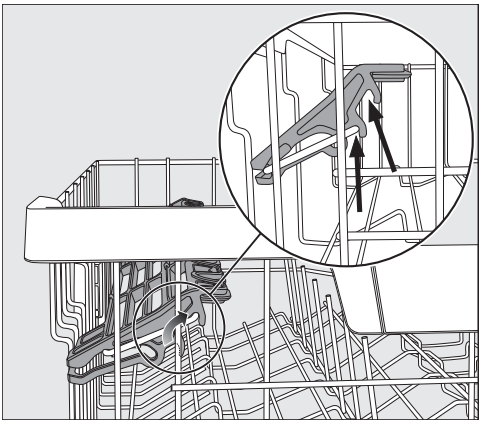

- Pull the cup rack upwards and click it into the desired position (see arrow).

Filling the openings of the FlexCare cup rack

The openings in the cup rack are specially designed to hold tall glasses with long stems securely.

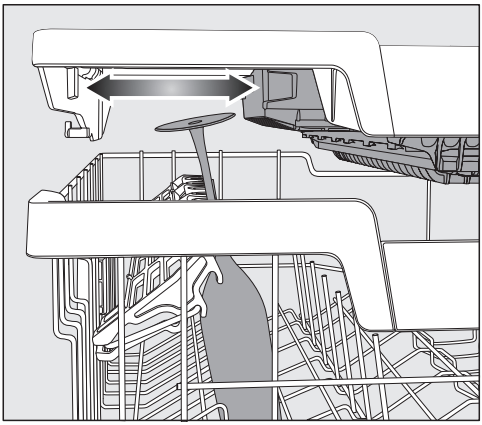

- Lower the cup rack and lean the glasses in the openings.
- If you wish you can adjust the left insert of the 3D MultiFlex tray to make space for taller glasses (see “Cutlery – 3D MultiFlex tray”).

Lowering the spikes

On both front right-hand rows of spikes, you can lower every other spike to make it easier to arrange larger crockery, e.g. cereal bowls.

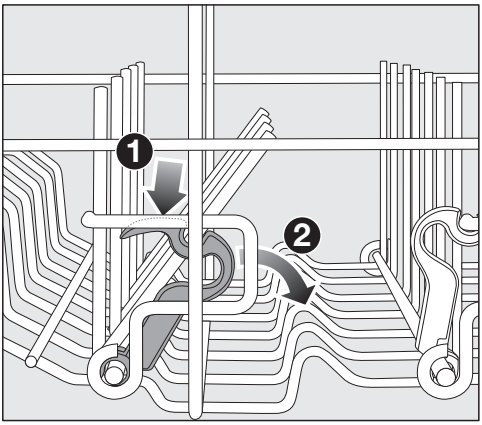

- Press the yellow lever downwards ❶, and then lower the dark grey spikes ❷.
- Place the bowls vertically in the row of spikes.

Adjusting the upper basket

In order to gain more space for taller pieces of crockery in the lower basket or upper basket, the upper basket can be adjusted on 3 levels with 2 cm between each level.

The upper basket can also be set at an angle so that water can run off freely from recesses. Make sure, however, that the basket can slide smoothly in and out of the wash cabinet.

- Pull out the upper basket.

Raise the upper basket:

- Lift the basket up until it clicks into place.

Lower the upper basket:

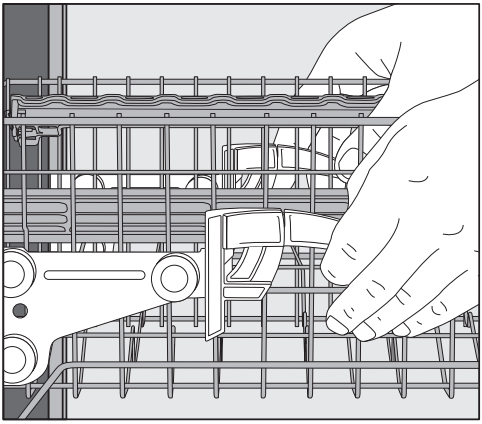

- Pull upwards on the levers at either side of the upper basket.
- Adjust the basket to the desired height and then push the levers securely back down into position.

When adjusting the upper basket, make sure that tall plates in the lower basket do not block the middle spray arm.

Lower basket (depending on the model)

See “Loading the dishwasher – Loading examples” for examples of how to load crockery and cutlery.

Loading the lower basket

- Place larger and heavier items such as plates, serving platters, saucepans, bowls etc., in the lower basket. Glasses, cups and small plates and saucers can also be placed in the lower basket.

Loading the MultiComfort zone

The rear section of the lower basket is used for washing cups, glasses, plates, pots and pans.

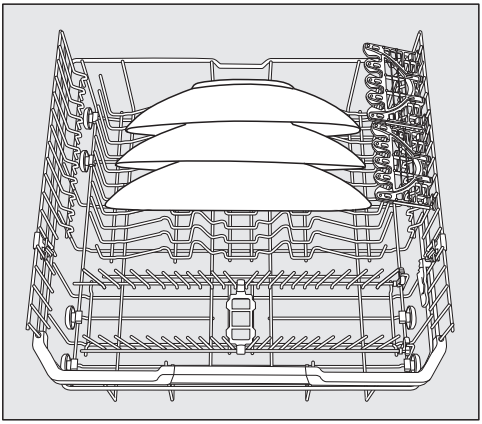

- Place very large plates in the middle of the lower basket.

Tip: When tilted, plates up to 35 cm in diameter can be accommodated.

Lowering the spikes

The rows of spikes at the front are used for loading plates, soup bowls, platters, dessert bowls and saucers.

Both right-hand rows of spikes can be lowered to make more room for large items, e.g. pots, pans and serving dishes.

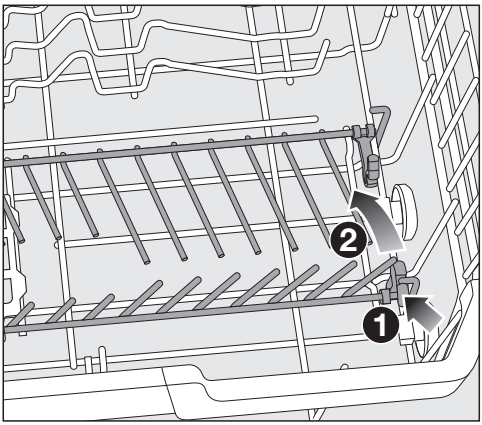

- Press the yellow lever downwards ❶, and then lower the rows of spikes ❷.

FlexCare Glass & Bottle

The glass and bottle holders are used to wash stemware, tall glasses and bottles.

Adjusting the FlexCare Glass & Bottle

You can set the glass and bottle holders at 2 different heights.

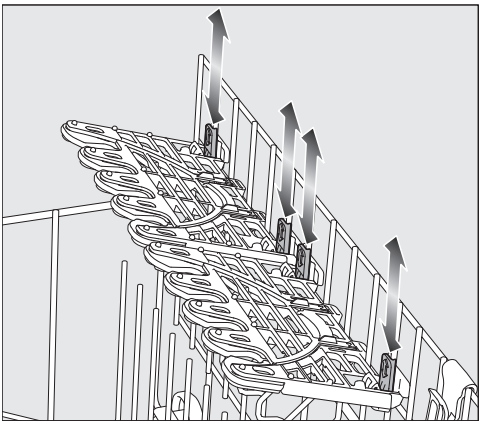

- Slide the glass and bottle holder to the desired height until the catches click into place at the top or the bottom.
- The glass and bottle holders can be raised to make more room for tall items.

Loading the glass holders

The silicone elements in the glass holder provide a stable and secure hold for delicate stemware.

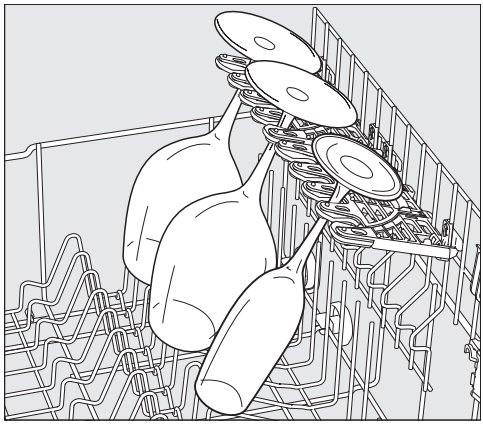

- Stemware such as wine glasses, champagne flutes and beer glasses can be pinned into the openings of the glass holders.

Loading the FlexCare Glass & Bottle

The glass and bottle holders can be used to keep tall, narrow and hollow containers, e.g. beer glasses, bottles, vases, secure during a programme.

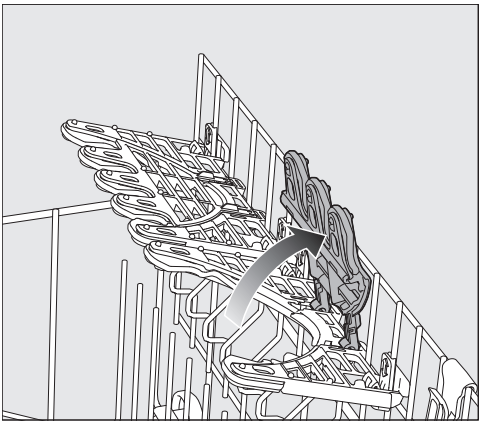

- The inserts in the glass and bottle holders can be raised to make more room for tall glasses or bottles.

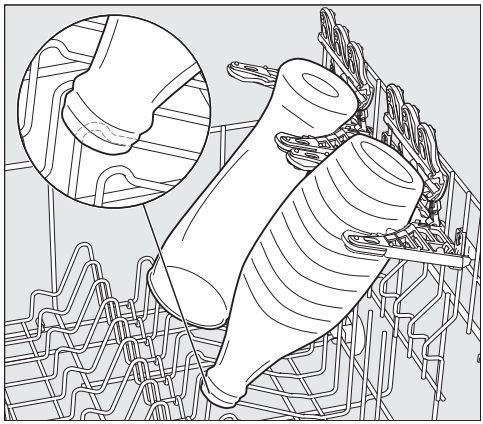

- Lean the containers into the holders.

Tip: For the best cleaning results, use the “BottleClean” extras (see “Extras – BottleClean”).

MultiClip

The MultiClips enable you to fasten light load items such as those made from plastic.

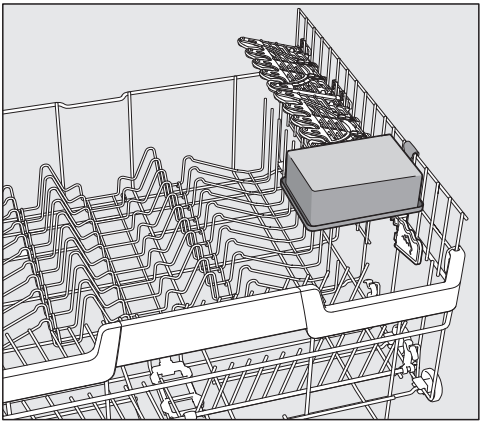

■ Secure light items to the MultiClips.

Make sure that crockery does not obstruct the middle spray arm.

XL-Assist

The XL-Assist is used to secure large load items, e.g. pots and pans.

This allows the crockery to be tilted for better drying results. Smaller items of crockery can be positioned under the large items.

Loading the XL-Assist

Unfold the XL-Assist to support large items of crockery on it.

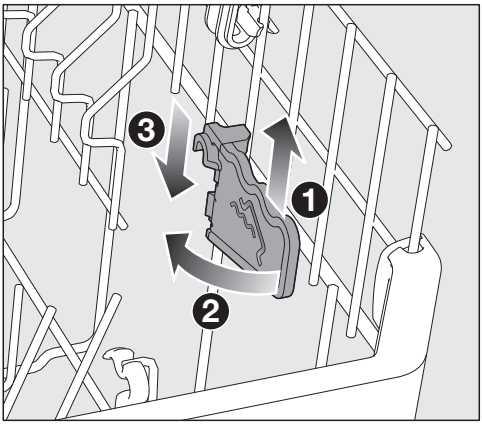

■ Slightly lift the XL-Assist ❶, fold it out ❷ and hook it back in the new position ❸.

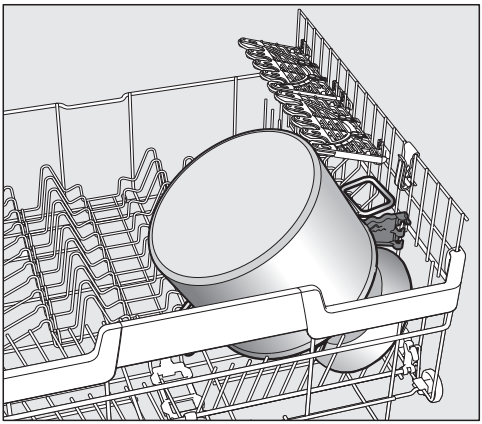

■ Place the edges of large crockery on the XL-Assist.

Cutlery tray/cutlery basket (depending on model)

See the “Loading the dishwasher” chapter, “Loading examples” section for examples of how to load crockery and cutlery.

- Load the cutlery into the 3D MultiFlex tray or into the cutlery basket (depending on the model).

Loading the 3D MultiFlex tray

To make unloading easier, cutlery should be grouped in zones, one for knives, one for forks, one for spoons, etc.

Spoon heads should be placed in contact with at least one of the serrated retainers on the base of the tray to ensure that water runs off them freely.

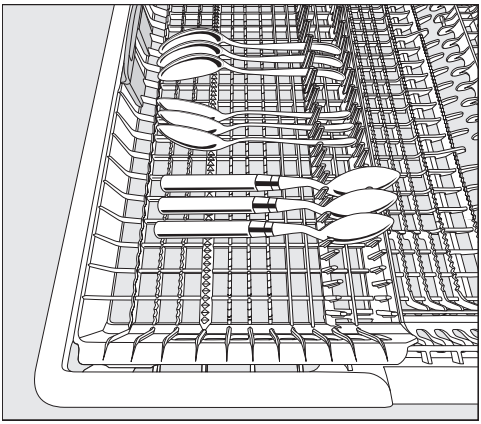

- If spoon handles do not fit between the holders, then lay them the other way round.

You can push the left insert to the middle in order to accommodate tall items of crockery and long stemmed glasses in the upper basket.

You can put large and long cutlery in the recessed centre part of the tray.

Arrange tall items (such as cake servers) so that they do not block the upper spray arm.

You can adjust the height of the right-hand insert to create more space in the right-hand part of the tray for larger cutlery items or smaller pieces of crockery.

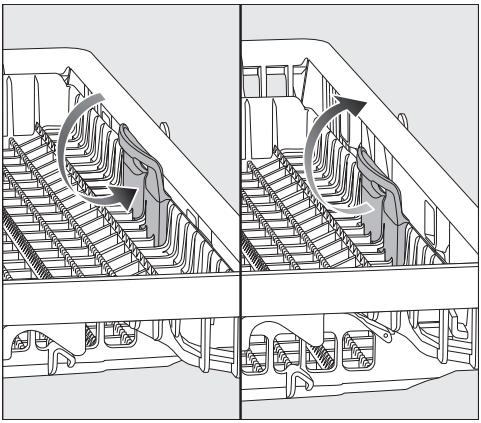

- Pull the insert inwards by the yellow handle and click it into place in one of the two positions.

Loading the cutlery basket (if present)

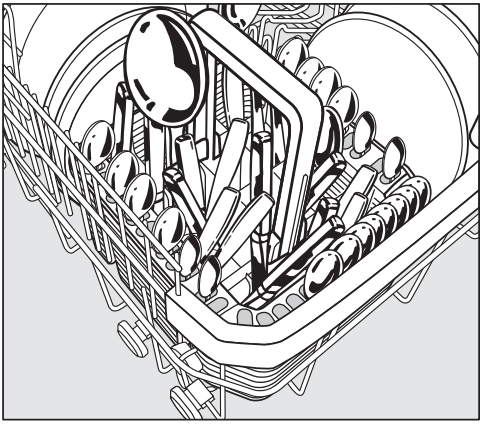

The cutlery basket can be placed anywhere on the front rows of spikes in the left or right corner of the lower basket.

- To avoid the risk of injury, knives and forks should be placed with the handles upwards in the cutlery basket.
- Place small items of cutlery in the individual slots on 3 sides of the cutlery basket.

Loading the cutlery insert for the cutlery basket

Use the insert supplied for heavily soiled items of cutlery. As this insert separates the items, they do not overlap and can be more easily accessed by the water jets.

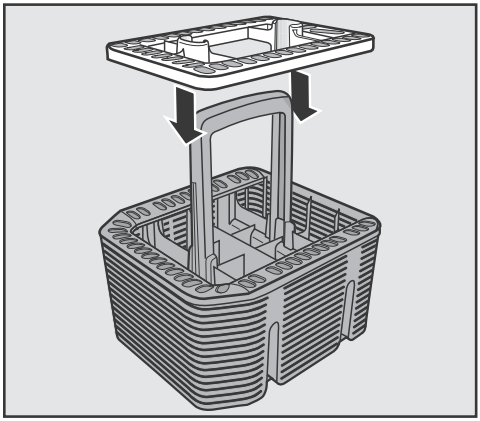

- Fit the insert onto the cutlery basket if required.

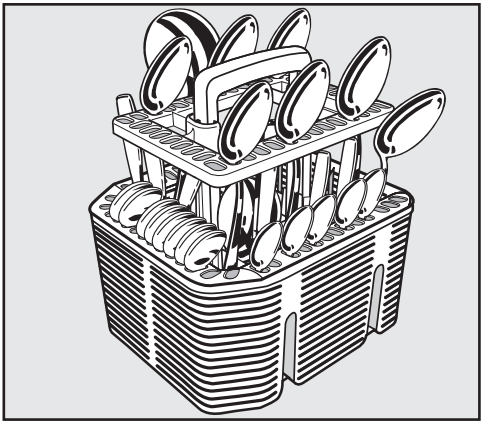

- Place cutlery into the insert with the handles facing downwards.
- Arrange them evenly along the insert.

Loading examples (depending on the model)

Dishwashers with cutlery tray

Upper basket

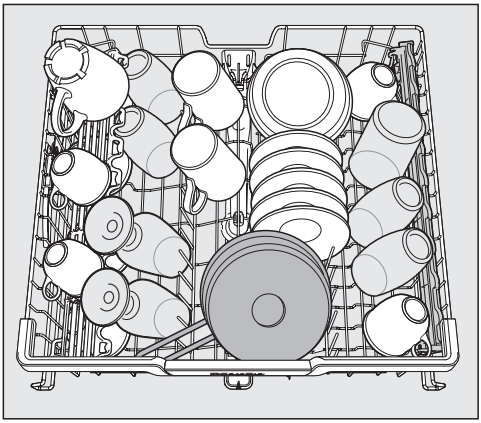

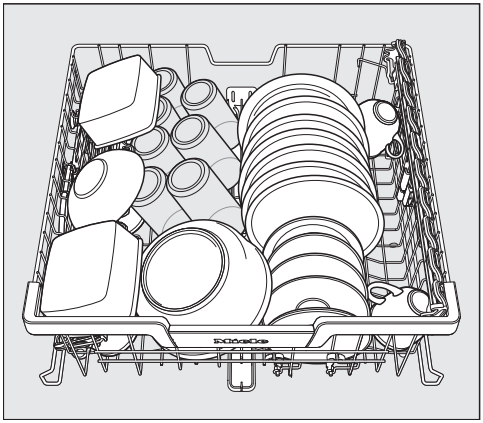

Lower basket

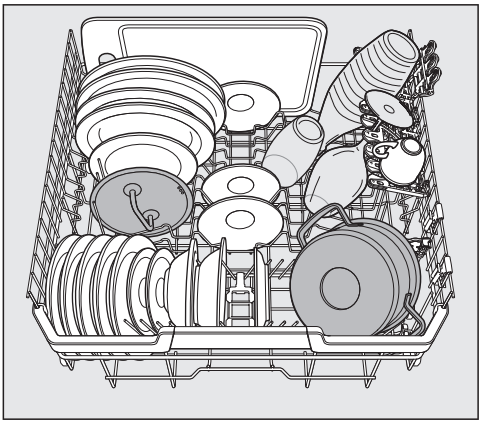

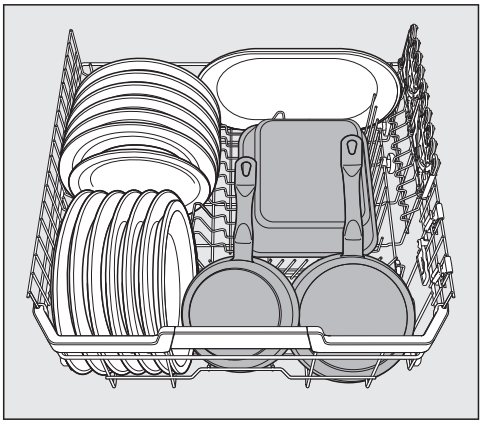

Cutlery tray

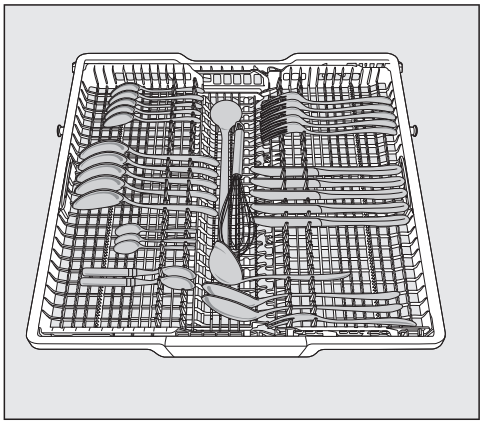

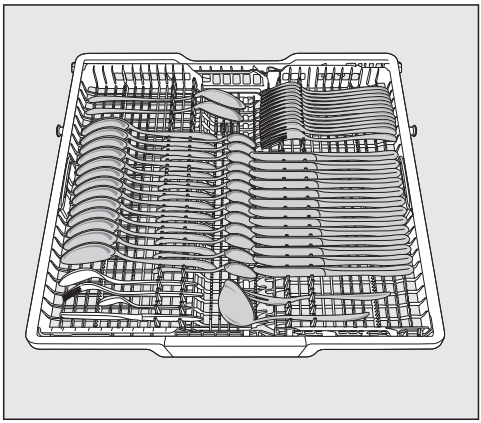

Heavily soiled crockery

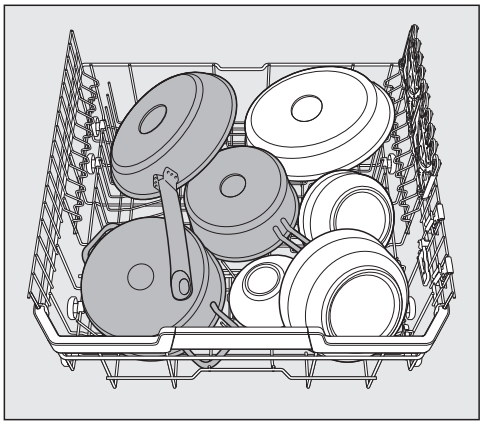

Dishwashers with cutlery basket

Upper basket

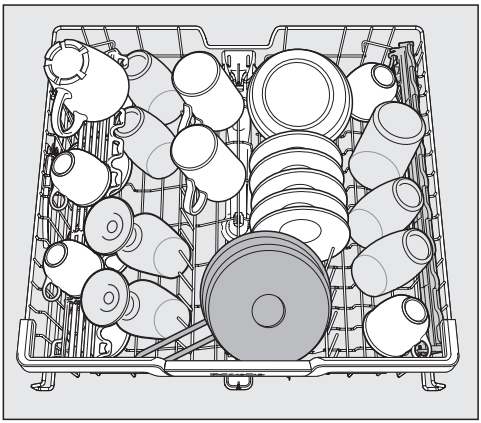

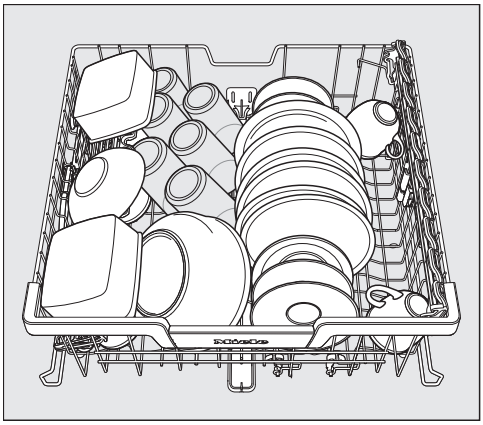

Lower basket

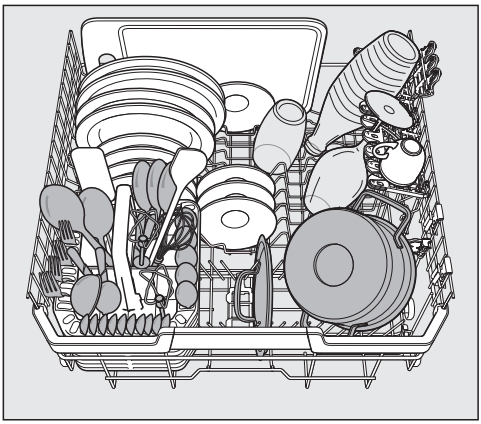

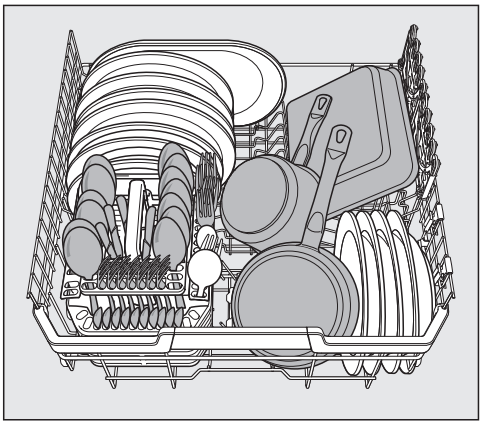

Cutlery basket

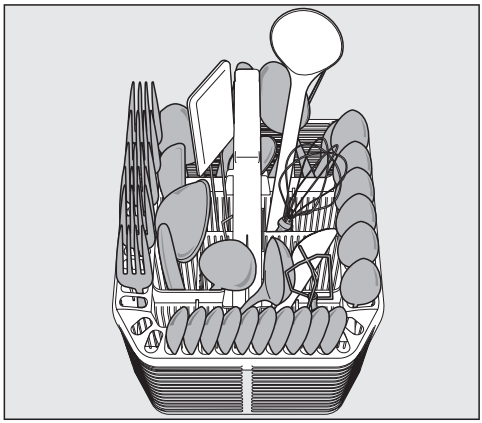

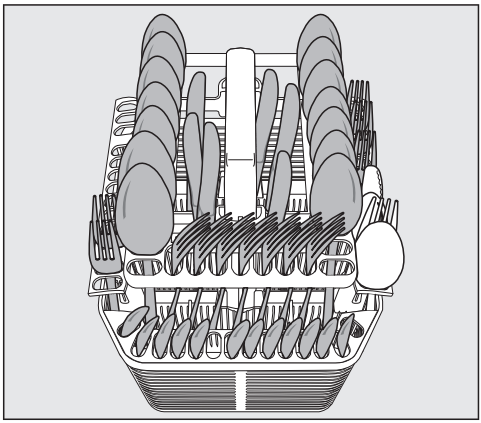

Heavily soiled crockery

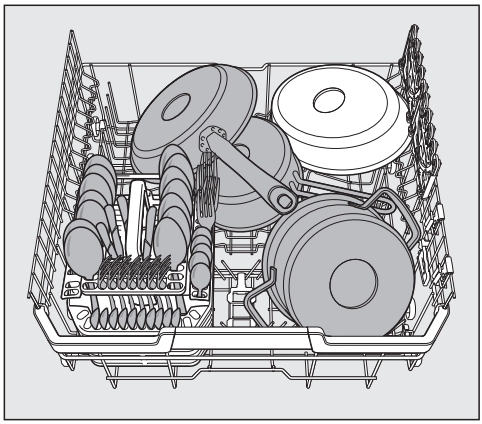

Active ingredients

⚠ Risk of damage due to unsuitable detergents.
Detergents that are not suitable for domestic dishwashers can cause damage to the dishwasher or to the load items.
Only use detergents formulated for domestic dishwashers.

Modern detergents contain various active ingredients, the most important of which are:

- Water softening complexing agents to prevent limescale.
- Alkalis to aid removal of dried-on soiling.
- Enzymes to break down starch and loosen protein.
- Oxygen-based bleaching agents to remove coloured stains (e.g. tea, coffee, tomato sauce).

Most dishwasher detergents are mildly alkaline and contain enzymes and oxygen bleach.

There are different types of detergent:

- Powder and liquid gel detergents. These detergents allow you to adjust the amount dispensed according to the load size and the level of soiling.
- Detergent tabs. These are suitable for most levels of soiling.

As well as the usual detergents, combination products are also available. These contain rinse aid and water softener (dishwasher salt).
Only use these combination detergents for the water hardness levels recommended by the manufacturer on the packaging.
The cleaning and drying performance of these combination detergents can vary greatly.
Please make sure that if you stop using combination detergent products, you refill the dishwasher salt and rinse aid. Switch the refill reminders back on if required.

For optimum cleaning and drying results, use dishwasher detergent and dispense salt and rinse aid separately.

⚠ Risk of chemical burns from detergent.
Dishwasher detergents can cause burning on the skin and in the eyes, nose, mouth and throat.
Avoid contact with detergents.
Do not inhale powder detergents. Do not swallow dishwasher detergents. Seek medical attention immediately if detergent has been swallowed or inhaled.
Keep children away from detergents. Detergent residues could still be present in the dishwasher. Keep children away from the dishwasher when the door is open. Do not fill the detergent dispenser until just before starting the programme.

Detergent dosage

There are two ways of dispensing the detergent.

During automatic dispensing the AutoDos will automatically dispense the required amount of detergent for each programme sequence once a PowerDisk has been inserted (see “Detergent” chapter, “Automatic dispensing/ AutoDos” section).

If you do not wish to use automatic dispensing, you can manually dispense the detergent into the detergent compartment. This means you will have to fill the required amount of detergent into the detergent compartment before each programme (see “Detergent” chapter, “Manual detergent dispensing” section).

Automatic dispensing/AutoDos

Before you can use AutoDos, you must insert a PowerDisk containing powder detergent into the PowerDisk compartment.

One PowerDisk contains enough detergent for approx. 20 cycles, depending on the chosen programme.

PowerDisks are available to order directly from the Miele online shop, the Miele Customer Service Department or from your Miele dealer.

⚠ Risk of chemical burns from residual detergent.
Detergents have a caustic effect. This can cause health problems and damage to surfaces. If the AutoDos is used incorrectly, residual detergent may drip onto the floor area in front of the dishwasher.
Always remove residual detergent from in front of the dishwasher immediately.

Activating AutoDos

- Switch the dishwasher on using the ⏻ sensor control.
- Before you first use AutoDos, remove the tab from the AutoDos lid and dispose of the tab appropriately.
- Insert a PowerDisk (see “Automatic dispensing/AutoDos – Inserting a PowerDisk”).

The *AutoDos* function will be activated automatically.
The message AutoDos activated will appear on the display.

This setting applies to all programmes and you can change it at any time using the *AutoDos* sensor control.

If no programme is started for 48 hours, the PowerDisk will automatically be rotated so that the detergent does not clump together. If this happens, the message Powder refreshing will be shown in the display when the dishwasher is switched on. No detergent will be dispensed.

Inserting a PowerDisk

Only replace the PowerDisk when the message PowerDisk empty. Deactivate AutoDos with OK appears.

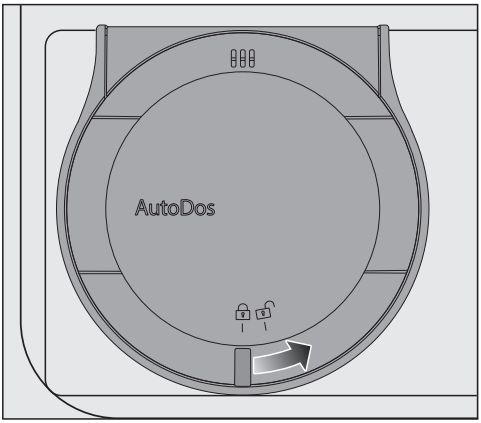

- Turn the AutoDos lid to 🔓 and open it.

The message AutoDos lid open will appear on the display.

- Remove the empty PowerDisk.

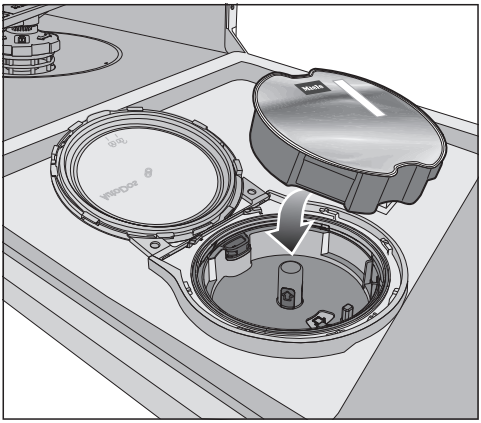

- Insert the new PowerDisk and press it evenly downwards until it sits flush.

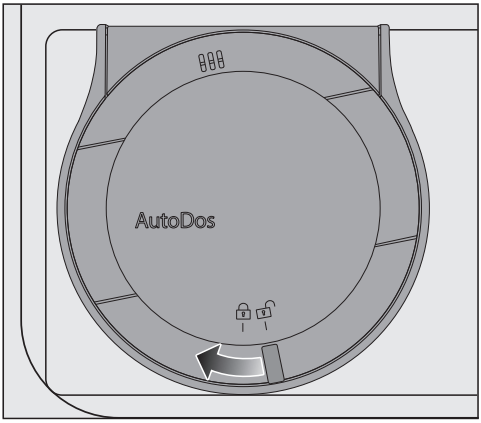

- Close the AutoDos lid and turn it until the lid handle is directly below the 🔒 symbol.

This activates the *AutoDos* function.

If the PowerDisk is not in the correct starting position, it will be rotated automatically.
Wait until this procedure ends before you start a programme.

The AutoDos lid must be closed to prevent damage to the AutoDos.
Always close the AutoDos lid before you close the dishwasher door. Otherwise, the AutoDos may become damaged.

Programmes cannot start when the AutoDos lid is open.

The detergent powder must be dry so that it does not clump together.
Do not fill the AutoDos with any type of fluid.

It is not permitted to refill the PowerDisk with powder detergent. This will invalidate the warranty.

In order to ensure that the AutoDos function works at its best, check it each time you replace the PowerDisk and clean it if needed (see “Cleaning and care – Cleaning the AutoDos”).

Manual detergent dispensing

Detergent must be manually dispensed if you have deactivated automatic dispensing using the *AutoDos* sensor control.

Dispensing detergent

The detergent compartment holds a maximum of 50 ml.

There are marks in the detergent compartment as a dispensing aid: 20, 30, max. When the door is opened to a horizontal position, they show the approximate fill level in ml and the maximum fill height.

- Follow the detergent dosage recommended by the manufacturer on the packaging.
- Unless directed otherwise, use one detergent tab or add 20 to 30 ml of detergent to the detergent compartment, depending on the degree of soiling of the crockery.

Failure to dispense the recommended amount of detergent may impair cleaning results.

Some tabs may not dissolve completely when the programme *QuickPowerWash* (*PowerWash* programme + *Quick* extra) is used.

Adding detergent

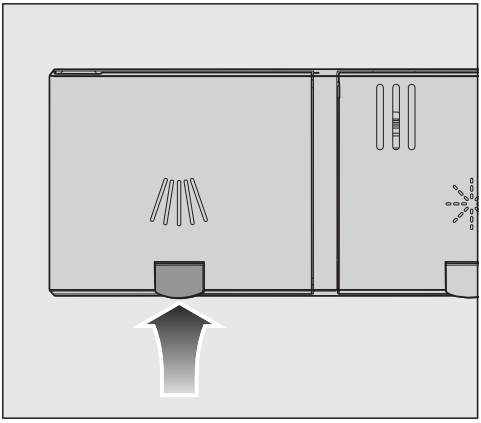

- Press the yellow button /|||\ on the lid of the detergent compartment.

The lid will spring open.
The lid will also open at the end of a programme sequence.

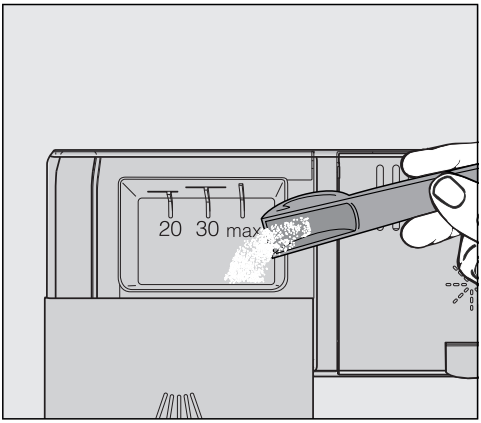

- Add the detergent to the detergent compartment.
- Push the lid shut until you hear it click into place.

The detergent must not cause the detergent compartment lid to get stuck. This can prevent the lid from opening during the programme sequence.
Do not overfill the detergent compartment.

- If you wish, deactivate automatic dispensing/AutoDos.
- Ensure that the detergent packaging is properly closed after use. This prevents the detergent from getting damp and clumping together.

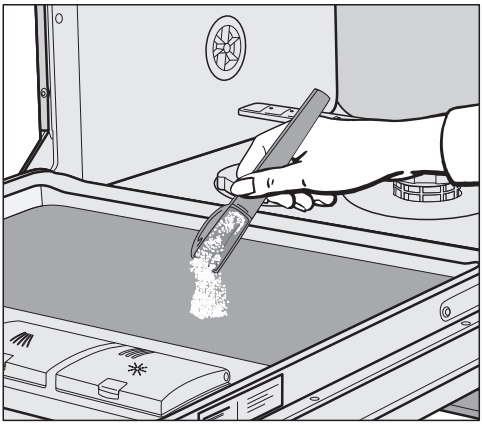

- You can also apply a small amount of detergent to the inner panel of the door in programmes that have a prewash stage (see “Programme chart”).

Switching on the dishwasher

- Open the stopcock, if it is closed.
- Open the door.
- Make sure the spray arms can rotate freely.
- Touch the ⏻ sensor control.
  If the dishwasher has been switched off for longer than 1 minute, you will need to hold the ⏻ sensor control for a bit longer (wipe protection).

The programme selected will appear briefly in the display and the appropriate sensor control will be illuminated.
Next, the estimated energy and water consumption may be shown for the chosen programme for several seconds.
Then the display will show the estimated duration for the selected programme.

Selecting a programme

Choose your programme according to the type of dishes and the degree of soiling.

The different programmes and their uses are described in the **“Programme chart”** later on in this booklet.

- Touch the sensor control for the required programme.

The sensor control for the selected programme will light up.

Further programmes can be selected under ⧉.

- To do so, touch the ⧉ sensor control.

The first of the further programmes will appear in the display.

- Use the ∨∧ sensor controls in the display to select the programme you want.

You can now select the extras (see “Extras”).

If any extras are selected, the appropriate sensor controls will also light up.

Display of programme duration

The estimated duration of the selected programme appears on the display before the programme begins. If the door is opened during the programme, the time left until the end of the programme is displayed.

Symbols appear to indicate which stage the programme is at:

- Pre-wash/Soak
- Main wash
- Interim rinse
- Final rinse
- Drying
- End

The displayed duration may vary for the same programme. It is influenced by, for example, the temperature of the incoming water, the reactivation cycle of the water softener, the detergent type and the amount of dishes and how soiled they are.

When a programme is selected for the first time, the display will show the average programme duration for a cold water connection.

The programme durations shown in the "Programme overview" chapter refer to standard test loads and temperatures.

Each time a programme is run, the control module calculates the programme duration according to the temperature of the water taken into the dishwasher and the size of the load.

Starting the programme

- Start the programme by closing the door.
  If necessary, confirm the previously displayed message with *OK*.

The optical in-operation indicator light comes on to show that a programme sequence has been started.

During a programme sequence, you can use *OK* to display the name of the programme that is currently running when the door is open.

⚠ Risk of scalding due to hot water.
During operation, water in the dishwasher may be very hot.
During operation, only open the door with extreme caution.

End of the programme

At the end of a programme, the in-operation indicator light will flash slowly with the door shut. The buzzers might also sound.

The in-operation indicator light will go out 10 minutes after the end of the programme if the door is closed.

The programme has ended when the display shows the message Finished.

In some programmes, if the "AutoOpen" function is activated, the door will automatically open slightly (see "Settings – AutoOpen"). This improves the drying process.

If the Consumption programmable function is switched on, you can now display the actual energy and water consumption of the programme that has just finished (see "Caring for the environment – Consumption indicator").

The drying fan may continue to run for a few minutes at the end of the programme.

If you are not satisfied with the cleaning or drying results, you can activate the Extra clean or Extra dry functions to boost the performance of the programmes (see “Extra clean” or “Extra dry” under “Extras”).

⚠ Risk of damage due to steam.
Steam from the dishwasher could damage delicate housing units and the edges of worktops when you open the door at the end of the programme if the fan is no longer running.
If you have deactivated the automatic door opener (see “Settings – AutoOpen”), but would still like to open the door at the end of the programme, then make sure that you open the door fully.

Energy management

To save energy the dishwasher will switch off automatically 10 minutes after the last time a sensor control is pressed or after the end of a programme.

You can switch the dishwasher back on again with the ⏻ sensor control.

If the dishwasher has been switched off for longer than 1 minute, you will need to hold the ⏻ sensor control for a bit longer (wipe protection).

The dishwasher will not switch itself off whilst a programme is running or if there is a fault.

Switching off the dishwasher

- Open the door.
- The dishwasher can be switched off at any time using the ⏻ sensor control.

Switching the dishwasher off during a programme stops the programme.

- Use the ∨ sensor control to select the Switch appliance off option.
- Confirm the query Switch appliance off with *OK*.

You can also do this to stop an ongoing timer.

⚠ Risk of damage from leaking water.
Water leakage can cause damage.
If the dishwasher is not going to be used for a longer period of time, e.g. whilst on holiday, the stopcock should be closed as a precaution.

Unloading the dishwasher

Dishes tend to break and chip more easily when they are hot. Allow the dishes to cool until they are comfortable enough to handle before unloading them.

If you open the door fully after switching off, the dishes will cool much faster.

- First unload the lower basket, then the upper basket and finally the 3D MultiFlex tray (if present).
  This will prevent water drops from the upper basket and 3D MultiFlex tray from falling onto the dishes in the lower basket.

Interrupting a programme

A programme will be interrupted as soon as the door is opened.
If the door is closed again, the programme will continue from the point it was at before the door was opened.

> ⚠ Risk of scalding due to hot water.
> During operation, water in the dishwasher may be very hot.
> During operation, only open the door with extreme caution.

Cancelling or changing a programme

> If a programme is cancelled, important programme stages may be missed.
> A programme should only be cancelled in the first few minutes of the programme sequence.

If a programme has already started and you wish to cancel it, proceed as follows:

- Open the door.
- Switch the dishwasher off using the ⏻ sensor control.
- Use the ∨ sensor control to select the Switch appliance off option.
- Confirm the query Switch appliance off with *OK*.

If you would like to select another programme:

- Switch the dishwasher back on using the ⏻ sensor control.
- If you have dispensed detergent manually, check whether the detergent compartment is still closed.
  If the detergent compartment lid is already open, fill it with detergent again and close the lid.
- Select the programme you want, and then start it by shutting the door.

The in-operation indicator light comes on to confirm that a programme sequence has been started.

Timer ◷

The timer ◷ gives you several options for starting a programme at a later time. You can set the start time or the finish time of a programme. You can also use the EcoStart or SmartStart functions to benefit from cheaper energy tariffs at night.

With manual detergent dispensing the detergent will clump together if the detergent compartment is not dry, and this may mean it is not fully rinsed out.

When using the timer function, make sure that the detergent compartment is dry before adding detergent. Wipe dry with a cloth first, if necessary. Do not use any liquid detergents. These can leak out.

⚠ Danger to health due to detergent.

To prevent children coming into contact with dishwasher detergent:

Do not fill the detergent dispenser **until just before starting the programme**, i.e. before you activate the timer.

Activating the timer

- Open the door.
- Switch the dishwasher on using the ⏻ sensor control.
- Select the programme you want to use.
- Touch the ◷ sensor control.

The ◷ sensor control lights up.

You can use the ∨∧ sensor controls to choose between the Start at, Finish at or EcoStart functions, or SmartStart if applicable.

- Confirm selection of the function you want with *OK*.

The last time set for the timer will be displayed and the hour number block will be highlighted.

- Enter the time you want for the timer using the ∨∧ sensor controls and confirm with *OK*.

If, while you are setting the time, you do not apply any settings for several seconds, the display will revert to the previous menu. You will then have to enter your settings again.

After you have activated the timer, all the displays will switch off after a few minutes to save energy.

You can also activate a timer via the Miele app.

Setting “Start at”

With the Start at function, you set the exact time you want the programme to start at.

- Use the ∨∧ sensor controls to enter the hour and confirm your entry by touching *OK*.

The hour will be saved and the minute number block will be highlighted.

- Use the ∨∧ sensor controls to enter the minutes and confirm your entry by touching *OK*.

The saved start time for the selected programme will appear in the display for several minutes.

- Close the door.

When the set time is reached, the selected programme will begin automatically.

Setting “Finish at”

Use the Finish at function to set the latest time by which the selected programme has to be finished.

- Use the ∨∧ sensor controls to enter the hour and confirm your entry by touching *OK*.

The hour will be saved and the minute number block will be highlighted.

- Use the ∨∧ sensor controls to enter the minutes and confirm your entry by touching *OK*.

The estimated start time for the selected programme will appear in the display for several minutes.

A message will appear in the display if the programme cannot be completed by the set finish time because it has too long a running time. It will show the time that can be set.

- If it appears, confirm the message with *OK*.
- Close the door.

The selected programme will start automatically when the estimated start time is reached.

Setting EcoStart

You can use the EcoStart function to benefit from cheaper energy tariffs at night. Before you can use this option, you need to set up to three electrical tariff time zones (see “Settings” chapter, “EcoStart” section).
Then set the latest time by which the selected programme has to be finished by.
The dishwasher will then start automatically in the most economical tariff zone within the time set.

- Use the ∨∧ sensor controls to enter the hour and confirm your entry by touching *OK*.

The hour will be saved and the minute number block will be highlighted.

- Use the ∨∧ sensor controls to enter the minutes and confirm your entry by touching *OK*.

The estimated start time for the selected programme will appear in the display for several minutes.

- Close the door.

The selected programme will start automatically when the estimated start time is reached.

Setting SmartStart

The SmartStart function is used for starting your dishwasher automatically at a time when your energy supplier’s electricity tariff is most economical.

To use this function you may need further technical accessories.

If you have activated the SmartStart function in the Settings ⚑ menu, the *Timer* ◷ menu will no longer show the EcoStart function but will instead show SmartStart (see the “SmartStart” section in the “Settings” chapter).

If your energy supplier offers this service, they will send a signal to your dishwasher when the electricity tariff is particularly economical.
This signal will start the dishwasher.

You can set the latest time by which the selected programme has to be finished.
The dishwasher will then calculate the latest possible start time for the programme selected and will wait until this start time for the signal from the energy supplier.

Set the latest time by which the selected programme has to be finished.

- Use the ∨∧ sensor controls to enter the hour and confirm your entry by touching *OK*.

The hour will be saved and the minute number block will be highlighted.

- Use the ∨∧ sensor controls to enter the minutes and confirm your entry by touching *OK*.

The message Waiting for SmartStart is displayed.

- Close the door.

The selected programme will start automatically as soon as the energy supplier has sent the signal or the latest possible calculated start time has been reached.

Changing or deleting set times

You can change the time set for the timer or delete it.

- Open the door.
- Touch the ◷ sensor control.
- Use the ∨∧ sensor controls in the display to select the previously activated timer function and confirm your entry with *OK*.
- Use the ∨∧ sensor controls to select the Change or Delete function and confirm with *OK*.

After confirming the Change function using *OK*, you can change the time set for the timer.

After confirming the Delete function using *OK*, the duration of the selected programme will appear in the display.
The ◷ sensor control goes out and the sensor control for the selected programme will light up.

You can now start a programme or switch the dishwasher off.

Switching the dishwasher off while a timer is running stops the timer.

You can also change the time set for the timer or delete it using the Miele app.

Activating MobileStart

You can start your dishwasher remotely using the Miele app. To do this, you first need to install the app on your mobile device, connect the dishwasher to your WiFi network (see “Settings – Miele@home”) and, if applicable, activate the “Remote control” setting (see “Settings – Remote control”).

- Open the door.
- Switch the dishwasher on using the ⏻ sensor control.
- Touch the sensor control.

The sensor control lights up.

- Switch the dishwasher off using the ⏻ sensor control.
- Close the door.

The dishwasher can now be operated remotely using the Miele app.

The MobileStart option will remain activated until you deactivate it again using the sensor control. The option will also remain active if you switch the dishwasher off and back on again in the meantime.

Even if the MobileStart option is not active, you can display the status of your dishwasher and apply settings using the Miele app.

If you start a programme by closing the dishwasher door, the MobileStart option will automatically be activated for the duration of the programme.

Displaying the operating hours

You can display how many hours the dishwasher has been in operation so far.

- Open the door.
- Switch the dishwasher on using the ⏻ sensor control.
- If necessary, confirm the messages and refill reminders with *OK*.
- Touch the sensor control for 5 seconds.

The operating hours are displayed.

- Use the ⮌ or *OK* sensor controls to return to the programme menu.

Guide for selecting a programme

Crockery	Food deposits	Programme features
Mixed crockery including temperature-sensitive glasses and plastics	Lightly dried-on normal food deposits	Balanced and gentle programme
Mixed crockery	All normal food deposits	Variable, sensor-controlled programme
	Standard dried-on normal food deposits	Water and energy saving programme
		Short programme
Pots, pans, everyday crockery and cutlery	Stubborn dried-on, burnt-on food deposits containing starch or protein[1]	Maximum cleaning performance

[1] Food such as potatoes, pasta, rice or stews can leave starchy deposits. Deposits containing protein can be left by food such as fried meat or fish.

Programme[2]	Consumption estimate[3]
ComfortWash 45 °C	Energy consumption Water consumption Programme duration
Auto	Energy consumption Water consumption Programme duration
ECO	Energy consumption Water consumption Programme duration
PowerWash 60 °C	Energy consumption Water consumption Programme duration
Intensive 75 °C	Energy consumption Water consumption Programme duration

[2] You can use “extras” to adjust the programmes (see “Extras”).
You can also select the “2nd interim rinse” function (see “Settings”).

[3] The estimated values may change due to the selected settings or extras, or the conditions in which the appliance is being used.

Programme overview

Programme	Programme sequence				
	Pre-wash	Main wash °C	Interim rinse	Final rinse °C	Drying/ AutoOpen
ECO[1]	-	43	✓	42	✓ / ✓
Auto 45–60 °C	Variable programme sequence, sensor-controlled adjustment according to load size and level of soiling				
	As required	45–60	✓	55–70	✓ / ✓
ComfortWash 45 °C	✓	45	✓	55–70	✓ / ✓
PowerWash 60 °C	-	60	✓	60	✓ / ✓
Intensive 75 °C	✓	75	✓	55–70	✓ / ✓
ComfortWash+ 55 °C	✓	55	✓	55–70	✓ / ✓
Hygiene 75 °C	-	75	✓	75	✓ / ✓
ExtraQuiet 50 °C	-	50	✓	55–70	✓ / ✓
SolarSave	✓✓	✓	✓	✓	✓ / ✓
Gentle 45 °C	-	45	✓✓	56	✓ / ✓
Maintenance wash	-	75	✓✓	70	✓ / ✓
Rinse out salt	✓	-	-	-	- / -

[1] Programme to which the energy label data refers.
According to the latest EU regulation, this programme is the most efficient in terms of its combined energy and water consumption for cleaning crockery with a normal level of soiling.

Consumption[2]				
Electrical energy		Water	Time	
Cold water 15 °C kWh	Hot water 60 °C kWh	Litres	Cold water 15 °C h:min	Hot water 60 °C h:min
0.54	0.29	8.4	3:50	3:40
0.65–0.95[3,4]	0.55–0.65[3,4]	6.0–13.0[3,4]	2:02–2:59	1:59–2:49
0.85	0.45	12.5	2:38	2:28
1.00	0.65	9.5	1:26	1:15
1.25	0.85	13.5	3:09	2:44
0.95	0.50	12.5	2:30	2:19
1.55	1.20	10.0	2:27	2:15
0.95	0.75	9.0	4:04	3:54
-	0.07	27.0	-	2:47
0.85	0.50	11.5	1:55	1:38
1.75	1.15	19.0	2:12	1:50
0.01	0.01	8.5	0:13	0:13

[2] Values for the *ECO* programme were calculated under standardised testing conditions. Values for the remaining programmes were calculated under comparable testing conditions.
In practice, the selected settings, extras or operating conditions may result in different values (see “Operation – Displaying the programme running time”).

[3] Minimum value: partial load with light soiling

[4] Maximum value: full load with heavy soiling

Further programmes

ComfortWash+ 55 °C

Programme for cleaning a mixed load of crockery with normal household food residues.

Hygiene 75 °C

Special programme for hard-wearing crockery with normal household food residues that have dried on slightly, which need to be hygienically clean, e.g. baby bottles and chopping boards.

ExtraQuiet 50 °C

Very quiet programme with longer running time. This programme is suitable for mixed crockery with normal household food residues that have dried on slightly.

SolarSave

Programme operating without heating when the dishwasher is connected to a hot water supply of at least 45 °C (see "Installation – Water inlet"). This programme is only sustainable when the water is heated using solar thermal energy. This programme is suitable for cleaning mixed crockery with normal household food residues that have slightly dried on.

Gentle 45 °C

Programme for particularly gentle cleaning of temperature-sensitive crockery, glasses and plastics with normal household food residues that have slightly dried on.

Maintenance wash

The dishwasher wash cabinet is generally self-cleaning. However, if residues or deposits occur, use the Maintenance programme to clean it. The dishwasher must not be loaded for this programme. This programme is designed for cleaning the wash cabinet using care products such as dishwasher cleaner. Follow the instructions on the packaging. When using dishwasher care products, detergent should not be dispensed. For this reason, automatic dispensing (if available) will be deactivated for this programme.

Rinse out salt

Programme for rinsing the wash cabinet after filling the salt reservoir. Each time you remove the salt reservoir cap, immediately start the *Rinse out salt* programme without load items and without detergent dispensing. This will dissolve and remove any traces of salt from the wash cabinet.

QuickPowerWash

Short programme under one hour for mixed crockery with normal household food residues that have dried on slightly. The programme can be selected via the *PowerWash* programme in conjunction with the *Quick* extra (see "Extras – Quick").

Selecting extras

You can use extras to adjust the programmes.

To do this, you can select or deselect the extras before starting the selected programme.

- Touch the *Extras* sensor control.
- Select the extra you want and confirm with *OK*.

Extras that cannot be combined with the selected programme or extra are indicated by a lock symbol.

If necessary, a corresponding message appears on the display.

- In this instance, confirm the message with *OK*.
- Start the programme by closing the door.

You can set whether the selected extras are to remain permanently activated for the respective programme (see “Settings – Saving extras”).

BottleClean

You can select the *BottleClean* extra to increase the cleaning performance of the programmes for tall, narrow hollow containers, e.g. beer glasses, drinking bottles. Load items that have been placed in the glass and bottle holders in the lower basket are cleaned particularly thoroughly (see “Loading the dishwasher – FlexCare Glass & Bottle”).

When this extra is activated, the programme running time is extended and the cleaning temperature may increase. This will increase the water consumption and energy consumption.

IntenseZone

You can select the *IntenseZone* extra to increase the cleaning performance of the programmes in the lower basket.

When this extra is activated, the programme running time is extended and the cleaning temperature increases. This will increase the water consumption and energy consumption.

Extra clean

You can select this extra to increase the cleaning performance of the programmes.

When this extra is activated, the programme running time is extended and the cleaning temperature increases. This will increase the water consumption and energy consumption.

Extra dry

You can select this extra to increase the programme’s drying performance.

When this extra is activated, the programme running time is extended and the final rinse temperature increases. This will increase energy consumption.

Selecting Quick

You can reduce the programme running time using the *Quick* extra.

The time by which the programme running time is shortened varies according to the selected programme.

In order to achieve optimum wash results, the temperature, and therefore the energy consumption, will slightly increase with this option.

The *Quick* extra may take precedence over other selected options.

You can select or deselect the extra before running the programme.

- Touch the *Quick* sensor control.

The sensor control will light up if the extra is available for the programme selected.

If the extra is not compatible with the selected programme, a message to this effect will appear in the display.

- In this instance, confirm the message with *OK*.
- Start the programme by closing the door.

You can set whether the selected extra is to remain permanently activated for the respective programme (see “Settings – Saving extras”).

Combining the *PowerWash* programme with the *Quick* extra results in the *QuickPowerWash* programme, a short programme for slightly dried-on food residues.

Check the condition of your dishwasher regularly (approx. every 4–6 months). In this way, faults and problems can be avoided.

⚠ Damage due to unsuitable cleaning agents.
All surfaces are susceptible to scratching. Contact with unsuitable cleaning agents can alter or discolour the external surfaces.
Only use cleaning agents formulated for use on the relevant surfaces.

Cleaning the wash cabinet

The wash cabinet is largely self-cleaning, provided that the correct amount of detergent is always used.

The frequent use of low-temperature wash programmes (< 50 °C) increases the risk of contamination and odours inside the wash cabinet. Run the *Intensive 75 °C* programme once per month to clean the wash cabinet and prevent odours from developing.

However, if residues such as limescale or grease have been deposited, use the Maintenance programme to clean the dishwasher (see "Programme overview – ⧉ Further programmes") with dishwasher cleaner. Follow the instructions on the product packaging.

Miele cleaning and care products are available to order from the Miele Customer Service Department or from the Miele online shop.

- Clean the filters in the wash cabinet regularly.

Hygiene cycle

If you mainly use low temperature programmes, there is a risk of bacteria and unpleasant odours building up in the wash cabinet. If you repeatedly use low temperature programmes, you should regularly run a high temperature programme. This is to prevent the build-up of residues and odours.

You can activate or deactivate a Hygiene info message (see "Settings – Hygiene cycle").
If you deactivate this message, run the *Intensive 75 °C* programme once per month to clean the wash cabinet and prevent odours from developing.

Cleaning the door and the door seal

The door seal and the sides of the dishwasher door cannot be reached and cleaned by the spray arm jets. As a result, mould can develop here.

- Wipe the door seals regularly with a damp cloth to remove food deposits.
- Wipe off any food or drink residues that may have dripped onto the sides of dishwasher door.

Cleaning the control field

- The control field should **only** be wiped with a clean, damp cloth.

Cleaning the reflector panel

The reflector panel for the optical in-operation indicator light is situated on the protective foil underneath the worktop.

- The reflector panel should only be cleaned with a damp cloth if necessary.

Cleaning the appliance front

⚠ Damage due to soiling.
Soiling that is left too long might become impossible to remove and could cause the external surfaces to alter or discolour.
It is therefore best to remove any soiling immediately.

- Clean the appliance front with a soft sponge cloth and a solution of warm water and washing-up liquid. After cleaning, wipe the surfaces dry using a soft cloth.
  A clean, damp microfibre cloth without dishwasher detergent can also be used.

To avoid damaging the external surfaces, do not use the following:

- Cleaning agents containing soda, ammonia, acids or chlorides
- Descaling agents
- Abrasive cleaning agents, e.g. scouring powder, scouring liquid, or pumice stones
- Cleaning agents containing solvents
- Stainless steel cleaners
- Dishwasher cleaners
- Oven cleaner
- Glass cleaning agents
- Hard, abrasive brushes, cloths or sponges, e.g. pot scourers, brushes or sponges that have been previously used with abrasive cleaning agents
- Eraser stain remover blocks
- Sharp metal scrapers
- Wire wool
- Steam cleaners

Cleaning the AutoDos

If the Clean AutoDos message is displayed, check that the AutoDos is clean, and clean it if necessary, e.g. powder residues. This helps keep the AutoDos working properly.

In order to ensure that the AutoDos function works at its best, check it each time you replace the PowerDisk and clean it if needed.

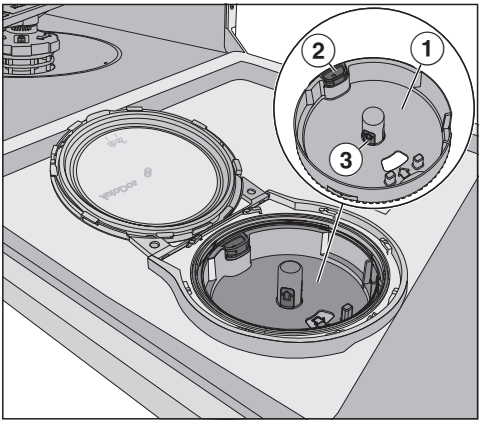

① PowerDisk holder

② yellow opening tag for unlocking the PowerDisk holder

③ yellow tabs on the PowerDisk holder

- Turn the AutoDos lid to 🔓 and open it.
- Remove the PowerDisk if appropriate.

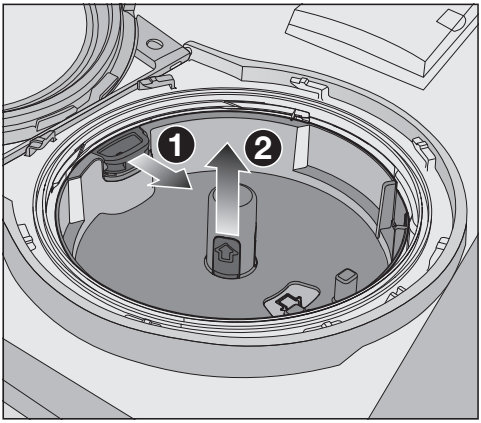

- Unlock the PowerDisk holder by pulling the yellow opening tag in the direction of the arrow ❶ and simultaneously pull the PowerDisk holder upwards ❷ using the yellow tabs.
- Clean the AutoDos housing and the PowerDisk holder with a damp cloth.
- Dry all parts well so that the detergent powder does not clump together.

It is very important that no moisture stays inside the AutoDos system during cleaning.

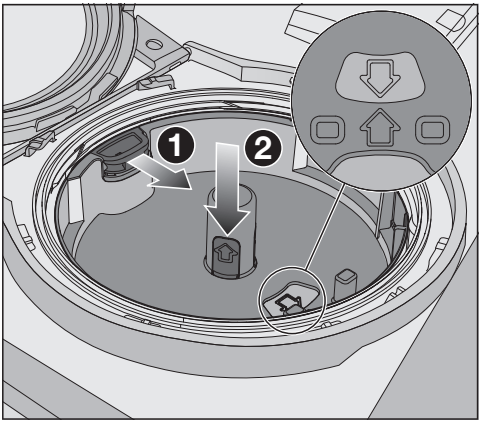

- Pull the yellow opening tag in the direction of the arrow ❶ and reinsert the PowerDisk holder ❷ at the same time. To do this, the arrows in the PowerDisk holder and in the viewing window must point towards each other. The holder must lie flat.

The AutoDos lid must close tightly so that the detergent powder does not get wet and clump together.
Make sure that all seals are clean and clean them if necessary.

- Insert a filled PowerDisk and press it evenly downwards until it sits flush.
- Close the AutoDos lid and turn it until the lid handle is directly below the 🔒 symbol. (see “Detergent – Inserting a PowerDisk”).

Regularly check the lower spray arm for any blockages to ensure that the detergent outlet of the AutoDos can be fully flushed out (see “Cleaning and care – Cleaning the spray arms”).

Cleaning the spray arms

Particles of food can get stuck in the spray arm nozzles and bearings. The spray arms should therefore be inspected regularly (approx. every 2–4 months).

Never run a wash programme without using the spray arms.

⚠ Damage due to soiling entering the circulation system.
Without filters, soiling can enter the circulation system and cause a blockage.
Do not run a wash programme without the lower spray arm or without the filters.
When cleaning the filters and spray arms, make sure that coarse soiling cannot get into the circulation system.

- Switch the dishwasher off.

Removing the cutlery tray (if present)

In order to be able to remove the upper spray arm, you first have to remove the cutlery tray (if present).

- Take out the cutlery tray.

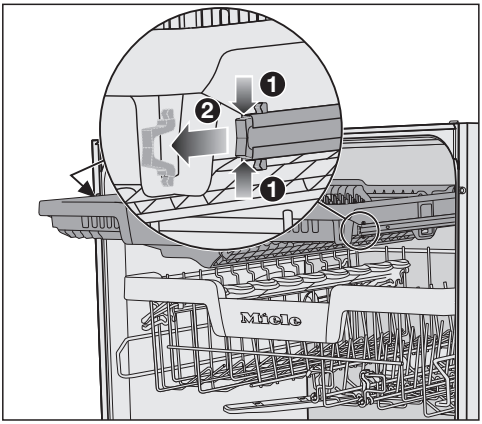

- Press the rail safety clips on both sides of the cutlery tray together ❶ and remove the safety clips ❷ at the same time.
- Take out the cutlery tray completely.

Removing the top spray arm

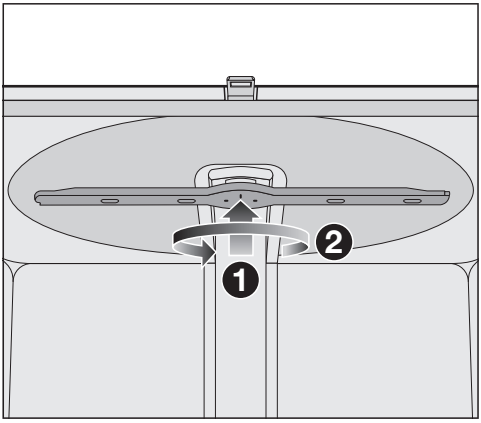

- Push the upper spray arm upwards ❶ to engage the inner ratchet. Then unscrew the spray arm by rotating the screw thread anti-clockwise ❷ (view from below).

Removing the middle spray arm

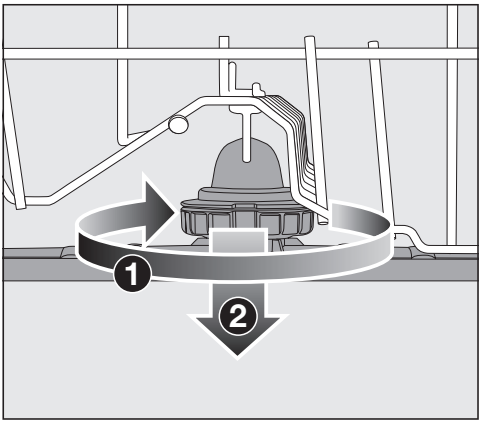

- Rotate the screw thread of the middle spray arm clockwise ❶ (view from above) and remove the spray arm ❷.

Removing the lower spray arm

- Remove the lower basket.

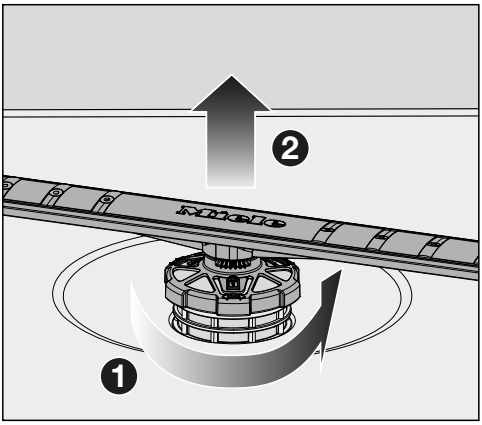

- Rotate the screw thread of the lower spray arm anti-clockwise ❶ (view from above) and pull the spray arm upwards to remove ❷.

Cleaning the spray arms

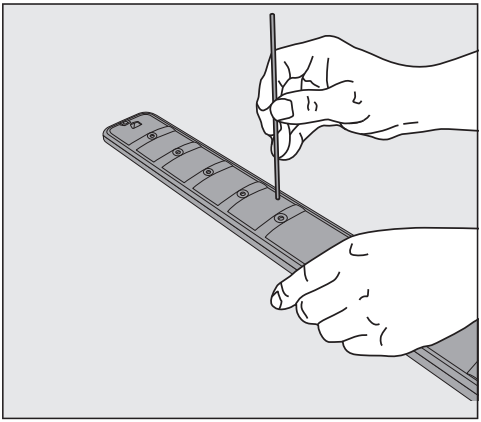

- Use a pointed object to push food particles into the spray arm nozzles.
- Rinse the spray arm thoroughly under running water.

Inserting the upper spray arm

- Refit the upper spray arm and tighten it by hand.

Inserting the middle spray arm

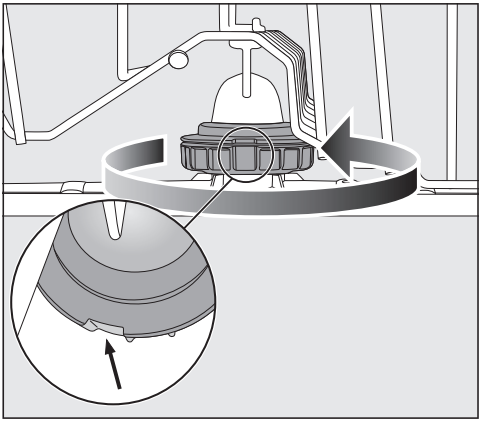

- Replace the middle spray arm and turn the screw thread anti-clockwise (view from above) until it engages. Make sure that the recesses in the lock line up.

Inserting the lower spray arm

- Refit the lower spray arm and ensure that the filter combination lies flat in the base of the wash cabinet.

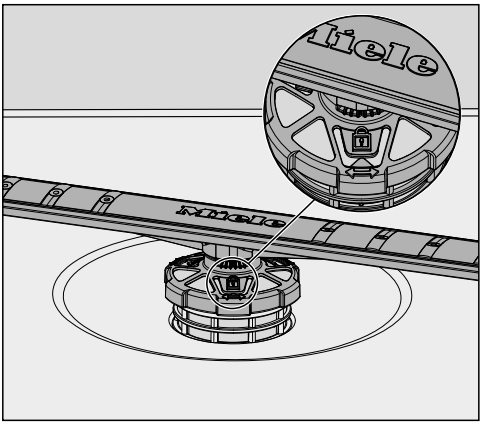

- Rotate the screw thread of the lower spray arm clockwise (view from above) until the arrow in the viewing window points to the lock symbol 🔒.
- Make sure the spray arms can rotate freely.

⚠ Damage due to soiling entering the circulation system.
The lower spray arm is used to secure the filter combination. Without filters, coarse soiling can enter the circulation system and cause a blockage.
Do not run a wash programme without the lower spray arm or without the filters.

Inserting the cutlery tray (if present)

- Slide the cutlery tray back onto the rails from the front.
- Replace the safety clips in the rails on both sides of the cutlery tray.

Checking the filters in the wash cabinet

The filter combination in the base of the wash cabinet retains coarse soiling from the suds solution. This prevents soiling getting into the circulation system and re-entering the wash cabinet through the spray arms.

⚠ Damage due to soiling entering the circulation system.
Without filters, soiling can enter the circulation system and cause a blockage.
Do not run a wash programme without the lower spray arm or without the filters.
When cleaning the filters and spray arms, make sure that coarse soiling cannot get into the circulation system.

The filters can become blocked by soiling that collects over time. The level of soiling and the time it takes before the filters need cleaning will vary depending on use.

The message Check filters will appear in the display after every 50 programme cycles.

- Check the filter combination.
- Clean it, if necessary.
- Then confirm the message with *OK*.

Cleaning the filters

- Switch the dishwasher off.
- Remove the lower spray arm (see “Cleaning and care” chapter, “Cleaning the spray arms” section).
- Before removing the filter combination, remove any coarse soiling to prevent it from entering the circulation system.

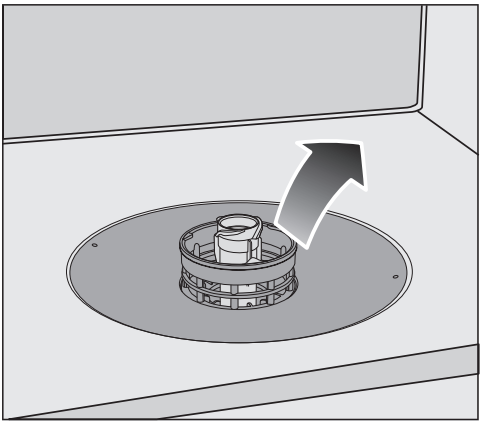

- Remove the filter combination.

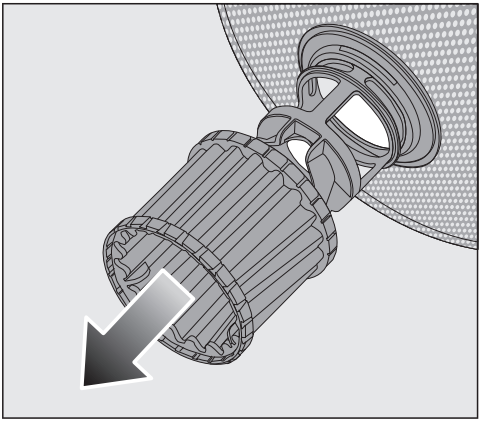

- In order to clean the inside of the filter, pull the microfilter on the plastic ring downwards and away from the filter combination.
- Rinse all the parts under running water.
  If necessary, use a soft cleaning brush to remove soiling.
- Insert the microfilter back into the filter combination.
- Refit the filter combination so that it lies flat in the base of the wash cabinet.
- Refit the lower spray arm to the filter combination using the screw connection.

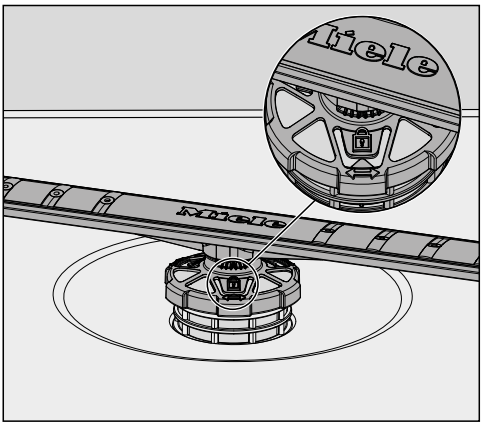

- Rotate the screw connection clockwise until the arrow in the viewing window points to the lock symbol 🔒.

⚠ Damage due to soiling entering the circulation system.
The lower spray arm is used to secure the filter combination. Without filters, coarse soiling can enter the circulation system and cause a blockage.
Do not run a wash programme without the lower spray arm or without the filters.

Cleaning the water inlet filter

A filter is incorporated in the screw thread to protect the water inlet valve. If the filter is soiled, insufficient water flows into the wash cabinet.

⚠ Risk of electric shock from mains voltage.
The plastic housing of the water connection contains an electrical valve.
The housing must not be dipped in water.

- Disconnect the dishwasher from the mains.
  To do this, turn off the dishwasher, switch off at the socket and remove the plug.
- Close the stopcock.
- Unscrew the water inlet valve.

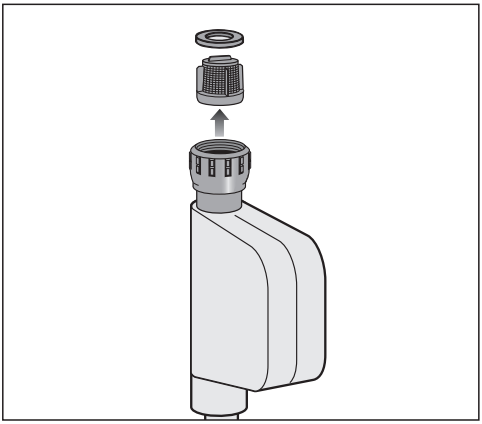

- Remove the seal from the screw thread.
- Using pointed pliers, take hold of the plastic filter slat and remove the filter.
- Rinse the filter under running water.
- Reassemble in reverse order.

Screw the screw thread securely back onto the stopcock. Slowly open the stopcock. If water drips out, tighten the screw thread.

Never forget to put the filter back in place after cleaning.

Cleaning the drain pump

If water remains in the wash cabinet after the end of the programme, the water has not been pumped away. The drain pump may be blocked by foreign objects. These foreign objects are easy to remove.

- Disconnect the dishwasher from the mains.
  To do this, turn off the dishwasher, switch off at the socket and unplug it.
- Take the filter combination out of the wash cabinet (see “Cleaning and care – Cleaning the filters”).
- Scoop the water out of the wash cabinet using a small container.

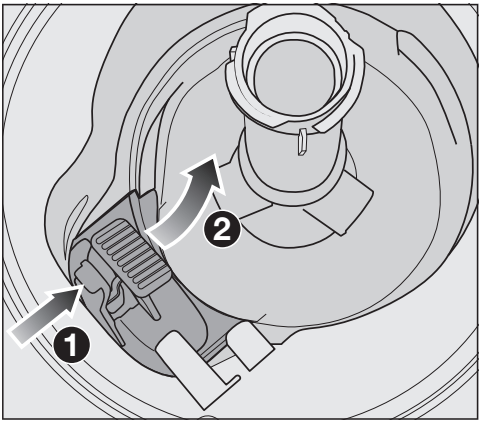

- Press the catch of the drain pump cover inwards ❶.
- Tip the cover inwards until it is released ❷.
- Rinse the cover thoroughly under running water and remove all foreign objects.

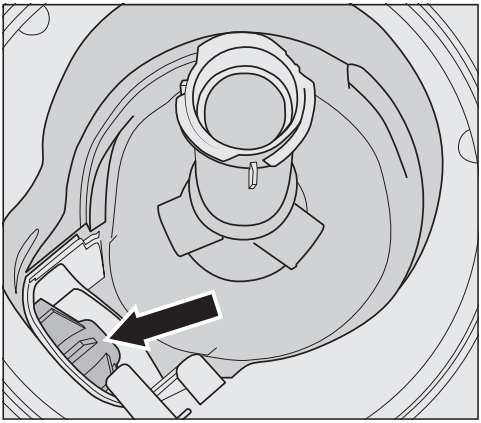

The drain pump (see arrow) is underneath the cover.

> ⚠ Risk of injury from glass splinters.
> It is especially difficult to see glass splinters in the drain pump.
> Take care when cleaning the drain pump.

- Carefully remove all foreign objects from the drain pump. Check the drain pump impeller by manually turning it. You will feel a little resistance when you turn the impeller.
- Refit the cover by placing it down vertically from above.

> Ensure that the catch engages correctly.

> ⚠ Damage due to incorrect cleaning.
> The components are delicate and can be damaged during cleaning.
> Take care when cleaning the drain pump.

Many malfunctions and faults can be easily remedied. You can save time and money in many cases, as you do not need to contact Customer Service.

More information to help you remedy faults yourself can be found at www.miele.co.uk/support/customer-assistance.

This section only lists faults that you can remedy yourself. All other faults are shown in ⚠ Fault F.

Technical problems

Problem	Cause and remedy
The dishwasher will not start.	The door is not closed properly. ■ Raise the door upwards until the catch engages.
	The dishwasher is not plugged in. ■ Insert the plug and switch on at the socket.
	The mains fuse has tripped. ■ Reset the trip switch in the fuse box or replace the fuse in the plug (see data plate for minimum fuse rating). ■ If the mains fuse trips again, contact the Miele Customer Service Department.
	The dishwasher is not switched on. ■ Switch the dishwasher on using the ⏻ sensor control.
The ⏻ sensor control does not respond or only responds once it has been touched several times.	Energy management: the door was opened or closed shortly before the ⏻ sensor control was touched. As a result, the dishwasher was already switched on. The electronic module requires a few seconds to be ready for operation. ■ Wait a few seconds after opening or closing the door. ■ Then touch the ⏻ sensor control.
The dishwasher stops during a programme.	The mains fuse has tripped. The display is dark and the dishwasher cannot be switched on. ■ Reset the circuit breaker (see data plate for minimum protection rating). ■ If the mains fuse trips again, please contact Miele Customer Service or a qualified specialist.

Problem solving guide

Problem	Cause and remedy
After the programme has started, the optical in-operation indicator light is not visible.	The reflector panel was not correctly fitted. ■ Re-fit the reflector panel correctly (see installation sheet).

Fault messages

Problem	Cause and remedy
The optical in-operation indicator light is flashing quickly. **The alarm tone is sounding.** **One of the following faults appears in the display:**	Before rectifying the problem: ■ Switch the dishwasher off.
⚠ Fault F	There may be a technical fault. ■ Switch the dishwasher back on after a few seconds. ■ Select the programme you want to use. ■ Close the door. If the fault message appears again, there is a technical fault. ■ Switch the dishwasher off. ■ Close the stopcock. ■ Call the Miele Customer Service Department.
Waterproof	The water protection system (Waterproof system) has reacted. ■ Switch the dishwasher off. ■ Close the stopcock. ■ Please contact Miele Customer Service or a qualified specialist.

Door release

Problem	Cause and remedy
The optical in-operation indicator light is flashing quickly. **The alarm tone is sounding.** **The following fault is indicated via the display:**	Before rectifying the problem: ■ Switch the dishwasher off.
⚠ Door fault	The door does not open automatically. There may be a technical fault. ■ Open the door manually (see the “Opening the door” section in the “Before using for the first time” chapter) and switch the dishwasher back on again. ■ If the fault message appears again, contact Miele Customer Service or a qualified specialist.
	The door lock catches do not retract after the door is opened. There may be a technical fault. ■ Switch the dishwasher back on. ■ If the fault message appears again, contact Miele Customer Service or a qualified specialist.

Water inlet fault

Problem	Cause and remedy
The optical in-operation indicator light is flashing quickly. **The alarm tone is sounding.** **One of the following messages appears in the display:**	
Open stopcock	The stopcock is closed. ■ Open the stopcock fully.

Problem	Cause and remedy
Water intake	Before rectifying the fault: ■ Switch the dishwasher off.
	There is a water inlet fault. ■ Open the stopcock fully and start the programme again. ■ Clean the filter in the water inlet (see the “Cleaning and care – Cleaning the water inlet filter”). ■ The water connection pressure is lower than 50 kPa. Seek professional advice. ■ The on-site connection for the water drainage may be too low and you will need to vent the water drainage (see “Installation – Water drainage”). If the fault message is displayed again, there may be a technical fault with the impeller flow meter. ■ Please contact Miele Customer Service or a qualified specialist.
The following fault message appears on the display during the SolarSave **programme:** Intake temperature too low	The intake water has not reached the required temperature of 45 °C (see “Installation – Water inlet”). ■ Start the programme again. ■ If the fault message appears again, select a different programme.

Water drainage fault

Problem	Cause and remedy
The optical in-operation indicator light is flashing quickly. **The alarm tone is sounding.** **The message** Drain **appears in the display**	Before rectifying the problem: ■ Switch the dishwasher off.
	Water drainage fault. There might be water in the wash cabinet. ■ Clean the filter combination (see “Cleaning and care” chapter, “Cleaning the filters” section). ■ Clean the drain pump (see “Cleaning and care” chapter, “Cleaning the drain pump” section). ■ Remove any kinks or loops in the drain hose.

Fault in the AutoDos (automatic dispensing)

Problem	Cause and remedy
The following message will appear on the display: Check PowerDisk	The *AutoDos* function is activated. There is no PowerDisk or an empty PowerDisk has been inserted. ■ Confirm the message Check PowerDisk with *OK*. ■ Insert a full PowerDisk. ■ Use the ∨∧ sensor controls to select the Available message and confirm with *OK* (see "Detergent – Automatic dispensing/AutoDos"). ■ If you do not wish to use automatic dispensing, deactivate the function using the *AutoDos* sensor control or by confirming the Not available message with *OK*.
The optical in-operation indicator light is flashing quickly. **The alarm tone is sounding.** **The programme does not start or a programme that has already started stops.** **The message** AutoDos lid open **appears in the display**	The AutoDos lid has not been closed properly. ■ Close the AutoDos lid and lock it fully (see "Detergent" chapter, "Automatic dispensing/AutoDos" section). ■ If the lid cannot be fully closed, check whether the PowerDisk holder is lying flat (see "Detergent" chapter, "Inserting a PowerDisk" section). ■ If the same fault message appears again, call the Miele Customer Service Department.
The message PowerDisk empty. Deactivate AutoDos with OK **appears in the display.**	The *AutoDos* function is active and the PowerDisk is empty. ■ Replace the PowerDisk (see the "Detergent" chapter, "Automatic dispensing/AutoDos" section). If you do not wish to use automatic dispensing, deactivate the function using *OK* or the *AutoDos* sensor control.

Problem	Cause and remedy
The in-operation indicator light is flashing quickly. **At the end of the programme, the alarm tone might sound and the display shows the following message:** ⚠ Fault F601	There is a fault in the AutoDos or the PowerDisk holder has not been inserted. ■ Switch the dishwasher off. ■ If necessary, remove the PowerDisk holder and reinsert it (see “Detergent – Automatic dispensing/ AutoDos”). ■ Switch the dishwasher back on and restart the programme. If the fault message appears again, there is a technical fault. However, you can continue using your dishwasher by removing the PowerDisk holder again and reinserting it. After closing the lid, deactivate AutoDos by pressing the *AutoDos* sensor control and manually dispense the detergent via the detergent compartment (see “Detergent – Manual detergent dispensing”). ■ If you wish to use automatic dispensing again, contact the Miele Customer Service Department.
The in-operation indicator light is flashing quickly. **At the end of the programme, the alarm tone might sound and the display shows the following message:** AutoDos maintenance required **The dishwasher does not switch off at the end of the programme.** **The crockery may not be clean because an insufficient amount of detergent was dispensed.** **The *AutoDos* function is automatically deactivated during the programme sequence.**	No or an empty PowerDisk has been inserted or the AutoDos is blocked by residual detergent. Detergent dosage is insufficient. The *AutoDos* function was automatically deactivated. ■ Switch the dishwasher off and back on again. Multiple messages appear in the display. ■ Clean the AutoDos (see “Detergent – Cleaning the AutoDos”). ■ Insert a full PowerDisk and close the AutoDos lid. ■ Clean the lower spray arm (see “Cleaning and care – Cleaning the spray arms”). ■ Select *OK* to confirm each message. ■ Activate the *AutoDos* function by confirming the message AutoDos available using *OK*. ■ Start the programme again.

Spray arm fault

Problem	Cause and remedy
During the programme and at the end of the programme, the display shows the following message: Check spray arms **The dishwasher does not switch off at the end of the programme.** **The crockery may not be clean because no detergent was dispensed.**	The bottom spray arm is blocked or the nozzles of the bottom spray arm are clogged. The AutoDos detergent outlet may not be completely flushed out. ■ Switch the dishwasher off and back on again. A message will appear on the display. ■ Perform a rotation check of the lower spray arm and rearrange the crockery if it is blocking the spray arm. ■ Clean the lower spray arm (see “Cleaning and care – Cleaning the spray arms”). ■ Confirm the message with *OK*. ■ Start the programme again.

General problems with the dishwasher

Problem	Cause and remedy
The indicator lights and the display are dark.	The dishwasher has switched off automatically to save energy. ■ Switch the dishwasher back on using the ⏻ sensor control.
Detergent residue is left in the detergent compartment at the end of a programme.	The detergent compartment was still damp when detergent was added. ■ Only add the detergent when the detergent compartment is dry.
The detergent compartment lid cannot be closed.	Residual detergent is blocking the catch. ■ Remove the residual detergent.
At the end of a programme there is a film of moisture on the inside of the door and possibly on the interior cabinet walls.	This is part of the normal function of the drying system. The moisture will dissipate after a short while.

Problem	Cause and remedy
Water remains in the wash cabinet at the end of a programme.	Before rectifying the problem: ■ Switch the dishwasher off.
	The filter combination in the wash cabinet is clogged. ■ Clean the filter combination (see “Cleaning and care” chapter, “Cleaning the filters” section).
	The drain pump is blocked. ■ Clean the drain pump (see “Cleaning and care” chapter, “Cleaning the drain pump” section).
	The drain hose is kinked. ■ Remove any kinks from the drain hose.
Build-up of odours in the wash cabinet	The frequent use of low-temperature wash programmes (< 50 °C) increases the risk of contamination and odours inside the wash cabinet. ■ Regularly run a high-temperature programme. This is to prevent the build-up of residues and odours.

Noises

Problem	Cause and remedy
Knocking noise in the wash cabinet	A spray arm is knocking against a wash item. ■ Carefully open the door and rearrange the wash items that are obstructing the spray arm.
Rattling noise in the wash cabinet	Wash items are insecure in the wash cabinet. ■ Carefully open the door and rearrange the wash items so that they sit securely.
	There is a foreign object (e.g. glass shard) in the drain pump. ■ Remove the foreign object from the drain pump (see “Cleaning and care” chapter, “Cleaning the drain pump” section).
Knocking noise in the water pipes	This may be caused by the on-site installation or the cross-section of the piping. ■ However, this will not affect the functioning of the dishwasher in any way. If in doubt, contact a suitably qualified plumber.

Unsatisfactory washing result

Problem	Cause and remedy
The crockery is not clean.	The crockery was not loaded correctly. ■ See notes under “Loading the dishwasher” for examples on how to load crockery and cutlery.
	The programme was not powerful enough. ■ Select a more powerful programme (see “Programme overview”). ■ Activate the Extra clean function (see “Extras – Extra clean”). ■ Activate the “Second interim rinse” function (see “Settings – Second interim rinse”).
	Not enough detergent was dispensed. ■ Use more detergent during manual dispensing or change the detergent you are using. ■ Increase the dispensing quantity during automatic dispensing (if available) (see “Settings – AutoDos”).
	Items are blocking the path of the spray arms. ■ Carry out a rotation check and if needed rearrange the items so that the spray arms can rotate freely.
	The filter combination in the wash cabinet is not clean or was incorrectly fitted. This may have caused the spray arm jets to become blocked. ■ Clean and/or fit the filter combination correctly. ■ Clean the spray arm jets if necessary (see “Cleaning and care – Cleaning the spray arms”).
There are smears on glassware and cutlery. There is a bluish sheen on the surface of glassware. The film can be wiped off.	The rinse aid dosage is set too high. ■ Reduce the dosage (see “Settings” chapter, “Rinse aid” section).

Problem solving guide

Problem	Cause and remedy
The crockery is not dry or cutlery and glasses are flecked.	The rinse aid dosage is too low or the rinse aid container is empty. ■ Replenish the rinse aid container, increase the dosage or change the brand of rinse aid (see “Before using for the first time – Rinse aid”).
	The crockery was taken out of the wash cabinet too soon. ■ Leave the crockery in longer (see “Operation – Unloading the dishwasher”).
	The duration of the drying phase for the selected programme is not sufficient for the crockery (particularly for plastic crockery). ■ Select the Extra dry function (see “Settings – Extra dry”).
	You have used combination products that have insufficient drying performance. ■ Switch to another detergent, or replenish the rinse aid (see “Before using for the first time – Rinse aid”).
Glassware has a brown or blue tinge. The film cannot be wiped off.	Ingredients from the detergent have formed a deposit. ■ Switch to another detergent straight away.
Glassware is dull and discoloured. The film cannot be wiped off.	The glassware is not dishwasher-proof. The surface has altered. ■ No remedy. Purchase glassware that is dishwasher-proof.
Tea or lipstick stains have not been completely removed.	The wash temperature of the selected programme was too low. ■ Select a programme with a higher main wash temperature.
	The bleaching effect of the detergent used is too low. ■ Switch to another detergent.
White residue is visible on the crockery. Clouding has occurred on glassware and cutlery. The film can be wiped off.	The rinse aid dosage is set too low. ■ Increase the dispensing quantity (see “Settings – Rinse aid”).
	There is no salt in the salt reservoir.

Problem	Cause and remedy
	■ Fill the salt reservoir (see “Before using for the first time – Dishwasher salt”).
	The salt reservoir cap has not been screwed on correctly. ■ Replace the cap, making sure that it screws back on correctly.
	Unsuitable combination detergents were used. ■ Switch to another detergent. If using detergent tabs or powder detergent, do not choose combination products and ensure you refill the dishwasher salt and rinse aid.
	The water softener is programmed to too low a water hardness level. ■ Programme the water softener to a higher water hardness level (see “Settings – Water hardness”).
	Too much detergent was dispensed. ■ Reduce the dispensing quantity during automatic dispensing (if available) (see “Settings – AutoDos”). ■ Activate the “Second interim rinse” function (see “Settings – Second interim rinse”).
	Not enough combination detergent was dispensed. The water softener performance is not sufficient. ■ Increase the dispensing quantity during automatic dispensing (if available) (see “Settings – AutoDos”). ■ Add more dishwasher salt.
Plastic items are discoloured.	Natural dyes, e.g. from carrots, tomatoes or ketchup may be the cause. The amount of detergent used or its bleaching effect was not sufficient to deal with natural dyes. ■ Use more detergent (see “Detergent”). Parts that are already discoloured will not revert to their original colour.

Problem	Cause and remedy
There are rust stains on cutlery.	The affected items are not corrosion-resistant. ■ No remedy. Purchase cutlery that is dishwasher-proof.
	A programme was not run after dishwasher salt was added. Traces of salt have got into the normal wash cycle. ■ Immediately after filling the salt reservoir and each time you remove the salt reservoir cap, run the Rinse salt programme without load items in the dishwasher to dissolve and remove any traces of salt from the wash cabinet.
	The salt reservoir cap has not been screwed on correctly. ■ Replace the cap, making sure that it screws back on correctly.

Information to help you rectify faults yourself and about Miele spare parts can be found at www.miele.com/service.

Contact in the event of a fault

In the event of any faults which you cannot remedy yourself, please contact your Miele dealer or the Miele Customer Service Department.

You can book a Miele Customer Service Department call-out online at www.miele.com/service.

Contact information for the Miele Customer Service Department can be found at the end of this document.

Please quote the model identifier and serial number of your appliance (Fabr./SN/Nr.) when contacting the Miele Customer Service Department. This information can be found on the data plate.

Please note that telephone calls may be monitored and recorded for training purposes and that a call-out charge will be applied to service visits where the problem could have been resolved as described in this booklet.

The data plate is located on the right side of the door.

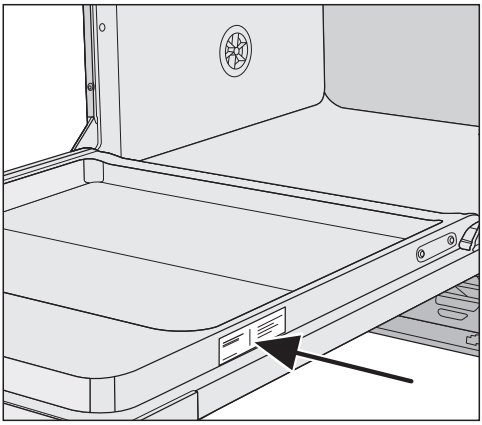

EPREL database

From 1 March 2021, information on energy labelling and ecodesign requirements will be available in the European Product Database (EPREL). You can find the product database at the following link https://eprel.ec.europa.eu/. You will be asked to enter the model identifier.

The model identifier can be found on the data plate.

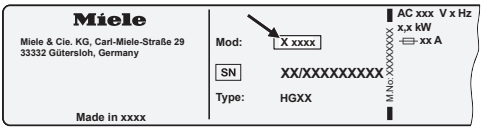

Warranty

For information on the appliance warranty specific to your country please contact Miele. See back cover for address.

In the UK, your appliance warranty is valid for 2 years from the date of purchase. However, you must activate your cover by calling 0330 160 6640 or registering online at www.miele.co.uk.

Note for test institutes

All relevant information for comparison testing is provided in the **“Comparison tests”** booklet.

You can download this booklet from the Miele website. You will find the booklet under “Downloads” on the page for the relevant dishwasher model.

The Miele Waterproof system

Provided that your dishwasher has been installed correctly, the Miele Waterproof system will protect you from water damage throughout its lifetime.

Water inlet

⚠ Health risk due to wash water.
Water in the dishwasher is not drinking water.
Do not drink any water from the dishwasher.

⚠ Health risk and risk of damage due to contaminated incoming water.
The quality of the incoming water must correspond to the drinking water specification of the country in which the dishwasher is being operated.
Connect the dishwasher to a drinking water supply.

The dishwasher may be connected to cold or hot water (up to max. 60 °C) supplies.
If energy-saving water heating sources such as solar energy circulation systems are used, we recommend connecting to the hot water connection. This saves both time and electrical energy costs. Hot water is used in all programmes.

The SolarSave programme (if available) requires a hot water connection of between a minimum of 45 °C and a maximum of 60 °C (inlet temperature). The higher the water intake temperature, the better the cleaning and drying results.

The water inlet hose is approximately 1.5 m long. A 1.5 m long, flexible metal extension hose (tested to 14,000 kPa/ 140 bar) is available as an optional accessory from Miele dealers or the Miele Customer Service Department.

A stopcock with a ¾" threaded union is required for the connection. If a stopcock is not available, only a qualified installer may connect the dishwasher to the drinking water supply.

The water connection pressure must be between 50 and 1,000 kPa. If the water connection pressure is too high, a pressure reducing valve must be fitted.

⚠ Risk of damage from leaking water.
The connection point is subject to water supply pressure. Water leaking from it can cause damage.
You should therefore open the stopcock slowly and check for leaks. Correct the position of the seal and screw thread if appropriate. Check the screw connections regularly to make sure they are still tight.

⚠ Risk of damage due to excessive pressure.
A brief increase in the water pressure can damage components of the dishwasher.
This dishwasher must only be operated when it is connected to a fully vented plumbing system.

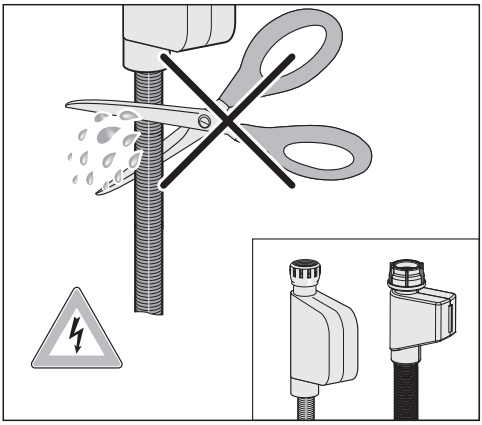

⚠ Risk of electric shock from mains voltage.
There are live electrical components in the water inlet hose.
The water inlet hose must not be shortened or damaged in any way (see illustration).

For Germany only

For the protection of drinking water, a non-return valve must be installed between the stopcock and the water connection of the dishwasher. If the building's plumbing has been installed correctly, the connections required for this (e.g. angle valve) will already have this safety feature.
Make sure that a non-return valve is fitted in the plumbing.

Water drainage

The dishwasher's drainage system is fitted with a non-return valve, which prevents dirty water from flowing back into the appliance via the drain hose.

The dishwasher is supplied with approx. 1.5 m of flexible drain hose with an internal diameter of 22 mm.

The drain hose can be extended using a connection piece to attach a further length of hose. The drainage length must not be longer than 4 m and the delivery head no higher than 1 m.

If the hose is to be directly fitted to the drainage outlet on site, use the hose clip supplied (see installation plan).

The hose can be directed to the left or the right of the appliance.

The on-site connector for the drain hose can be adapted to different hose diameters. If the connector extends too far into the drain hose, it must be shortened. Otherwise, the drain hose can become blocked.

The drain hose must not be shortened.

Lay the drain hose so that it does not kink and is not being subjected to pressure or tension.

⚠ Risk of damage from leaking water.
Leaking water can cause damage.
After commissioning, make sure that the water is not leaking.

Venting the water drain

If the on-site drainage connection is situated lower than the guide path for the lower basket rollers in the open door, the drainage system must be vented. Otherwise, a siphoning effect can cause the wash cabinet to empty itself of water during a programme.

- Open the dishwasher door fully.

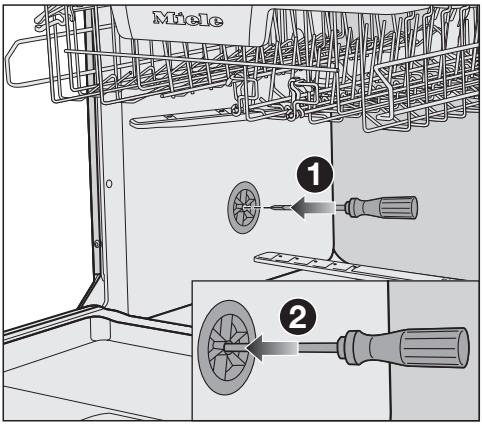

- Remove the lower basket.
- Insert a screwdriver into the middle opening of the vent valve in the left wash cabinet wall ❶.
- Press the screwdriver further into the opening and push it through the membrane ❷ behind.

The vent opening for the water drain is now open.

Electrical connection

The dishwasher is “connector-ready” as standard for connection to an earthed socket.

The socket must be easily accessible after the dishwasher has been installed. If that is not possible, ensure that a suitable means of disconnection is provided on the installation side for each pole.

⚠ Risk of fire from overheating.
Connecting the dishwasher to a multi-socket adapter or to an extension lead can overload the mains connection cable.
For safety reasons, do not use an extension lead or multi-socket adapter.

The electrical installation must comply with VDE 0100 requirements.

For safety reasons, we recommend using a type residual current device (RCD) in the assigned electrical installation for connecting the dishwasher.

If the mains connection cable is damaged, it must only be replaced with a specific mains connection cable of the same type (available from the Miele Customer Service Department). For safety reasons, such replacement may only be carried out by a qualified specialist or the Miele Customer Service Department.

These operating instructions and the data plate indicate the nominal power consumption and the appropriate fuse rating. Compare this information with the data of the on-site electrical connection.
If in any doubt, consult a qualified electrician.

Temporary or permanent operation on an autonomous power supply system or a power supply system that is not synchronised with the mains power supply (e.g. island networks, back-up systems) is possible. A prerequisite for operation is that the power supply system complies with the specifications of EN 50160 or an equivalent standard. The function and operation of the protective measures provided in the domestic electrical installation and in this Miele product must also be maintained in isolated operation or in operation that is not synchronised with the mains power supply, or these measures must be replaced by equivalent measures in the installation. As described, for example, in the current version of BS OHSAS 18001–2 ISO 45001.

Technical data

Dishwasher model	Normal	XXL
Height	80.5 cm (adjustable by +6.5 cm)	84.5 cm (adjustable by +6.5 cm)
Height of building-in niche	Min. 80.5 cm (+6.5 cm)	Min. 84.5 cm (+6.5 cm)
Width	59.8 cm	59.8 cm
Width of building-in niche	60 cm	60 cm
Depth	55 cm	55 cm
Weight	Max. 47 kg	Max. 54 kg
Voltage	See data plate	
Rated load	See data plate	
Fuse rating	See data plate	
Test certifications awarded	See data plate	
Water pressure	50–1000 kPa (0.5–10 bar)	50–1000 kPa (0.5–10 bar)
Hot water connection	Up to max. 60 °C	Up to max. 60 °C
Delivery head	Max. 1 m	Max. 1 m
Drainage length	Max. 4 m	Max. 4 m
Mains connection cable	Approx. 1.7 m	Approx. 1.7 m
Capacity	13/14 place settings*	13/14 place settings*

* depending on the model

Technical data

Dishwasher model	Normal	XXL
Off mode	Maximum 0.50 W*	
Standby mode	Maximum 0.50 W*	
Delay start	Maximum 4.00 W*	
Networked standby	Maximum 2.00 W*	
Frequency range of the WiFi module	2.4000–2.4835 GHz	
Maximum transmission power of the WiFi module	< 100 mW	

* see product data sheet for precise values

EU Conformity declaration

Miele hereby declares that this dishwasher complies with Directive 2014/53/EU.

The complete text of the EU declaration of conformity is available from one of the following internet addresses:

- Products, Download from www.miele.ie
- For service, information, operating instructions etc: go to https://miele.ie.manuals and enter the name of the product or the serial number

UK Conformity declaration

Miele hereby declares that this dishwasher complies with UK Radio Equipment Regulations 2017, as amended.

The complete text of the UK declaration of conformity is available from one of the following internet addresses:

- Products, Download from www.miele.co.uk
- For service, information, operating instructions etc: go to https://miele.co.uk/manuals and enter the name of the product or the serial number

This **Statement of Compliance** confirms this Miele product fully complies with the **Product Security and Telecommunications Infrastructure (Security Requirements for Relevant Connectable Products) Regulations 2023.**

1) Household Appliance – *Dishwasher HG07-W*
2) Manufactured by: Miele & Cie KG,
   Carl Miele Street 29, 33332 Gutersloh Germany
   Imported by and contact point: Miele Company Ltd, Fairacres, Marcham Road, Abingdon, Oxon, OX14 ITW Great Britain
3) The defined support period at the time of first supply is 10 years
4) To report vulnerabilities and cybersecurity issues please contact: psirt@miele.com
5) Signature
   Name: **Paul Wright**
   Company Position: **Head of Technical Management**
   Date of signature: **19th March 2024**
   Place of signature: **Abingdon, Oxfordshire**

United Kingdom
Miele Co. Ltd., Fairacres, Marcham Road, Abingdon, Oxon, OX14 1TW
Tel: 0330 160 6600, Internet: www.miele.co.uk, E-mail: info@miele.co.uk

Australia
Miele Australia Pty. Ltd.
ACN 005 635 398
ABN 96 005 635 398
Level 4, 141 Camberwell Road
Hawthorn East, VIC 3123
Tel: 1300 464 353
E-mail: info@miele.com.au
Internet: www.miele.com.au

China Mainland
Miele Electrical Appliances Co. Ltd.
No. 82, Shimenyi Road, JingAn District
Shanghai, China, P.R.C
Post Code: 200040
Phone: +86 21 6157 3500
Fax: +86 21 6157 3511
E-mail: info@miele.cn
Internet: www.miele.cn

Hong Kong, China
Miele (Hong Kong) Ltd.
41/F - 4101, Manhattan Place
23 Wang Tai Road
Kowloon Bay, Hong Kong
Tel: (852) 2610 1025
Fax: (852) 3579 1404
E-mail:
customerservices@miele.com.hk
Website: www.miele.hk

India
Miele India Pvt. Ltd.
1st Floor, Copia Corporate Suites,
Commercial Plot 9, Mathura Road,
Jasola, New Delhi - 110025
E-mail: customercare@miele.in
Website: www.miele.in

Ireland
Miele Ireland Ltd.
2024 Bianconi Avenue
Citywest Business Campus
Dublin 24
Tel: (01) 461 07 10
Fax: (01) 461 07 97
E-mail: info@miele.ie
Internet: www.miele.ie

Malaysia
Miele Sdn Bhd
Suite 12-2, Level 12
Menara Sapura Kencana
Petroleum
Solaris Dutamas No. 1
Jalan Dutamas 1
50480 Kuala Lumpur, Malaysia
Phone: +603-6209-0288
Fax: +603-6205-3768

New Zealand
Miele New Zealand Limited
IRD 98 463 631
8 College Hill
Freemans Bay, Auckland 1011
Tel: 0800 464 353
E-mail: customercare@miele.co.nz
Internet: www.miele.co.nz

Singapore
Miele Pte. Ltd.
29 Media Circle
#11-04 ALICE@Mediapolis
Singapore 138565
Tel: +65 6735 1191
Fax: +65 6735 1161
E-mail: info@miele.com.sg
Internet: www.miele.sg

South Africa
Miele (Pty) Ltd.
63 Peter Place, Bryanston 2194
P.O. Box 69434, Bryanston 2021
Tel: (011) 875 9000
Fax: (011) 875 9035
E-mail: info@miele.co.za
Internet: www.miele.co.za

Thailand
Miele Appliances Ltd.
BHIRAJ TOWER at EmQuartier
43rd Floor Unit 4301-4303
689 Sukhumvit Road
North Klongton Sub-District
Vadhana District
Bangkok 10110, Thailand

United Arab Emirates
Miele Appliances LLC
Showroom 1, Eiffel 1 Building
Sheikh Zayed Road, Umm Al Sheif
P.O. Box 114782 - Dubai
Tel. +971 4 3044 999
Fax. +971 4 3418 852
800-MIELE (64353)
E-mail: info@miele.ae
Website: www.miele.ae

Manufacturer: Miele & Cie. KG, Carl-Miele-Straße 29, 33332 Gütersloh, Germany

Miele

G 7650, G 7652, G 7655, G 7657, G 7672, G 7677

en-GB

M.-Nr. 12 781 040 / 03 / 002