Operating instructions
Refrigerator

To avoid the risk of accidents or damage to the appliance it is **essential** to read these instructions before it is installed and used for the first time.

en-GB

M.-Nr. 12 583 990

Contents

Warning and Safety instructions **5**

Caring for the environment **13**

Installation **14**
Installation site 14
Side-by-side combinations 15
Climate range 15
Ventilation 16
Changing the door hinging 16
Furniture door panel 16
Horizontal and vertical gaps 16
Weight of the furniture door 17
Building-in dimensions 18
Installation in a tall unit/side view 18
Connections and ventilation 19
Electrical connection 20

Saving energy **21**

Guide to the appliance **22**
Start display 24
Using the appliance 24
Settings mode 25
Automatic door opening (ActiveDoor) 27
... via knocking signal 27
... via voice commands 28
Adjusting the interior fittings 28
Using the door shelf fine adjustment 28
Repositioning the door shelf with fine adjustment 28
Moving the door shelf/bottle shelf 29
Clipping the egg trays on 29
Adjusting or removing the bottle holder 29
Moving the adjustable shelf/adjustable shelf with lighting 29
Using the storage drawer (CompactCase) 30
Moving the storage drawer (CompactCase) 30
Adjustable shelf with pivotable glass shelf (FlexiTray) 30
Moving the bottle rack 31
Using the bottle rack in the dividing plate 31
Removing and reinserting the organisation box 31
Inserting the adapters for the baking tray 32
Moving the charcoal filters 32
Accessories supplied 33
Optional accessories 33

Contents

Switching on and off ... **34**
Before using for the first time ... 34
Connecting the refrigeration appliance ... 34
Filling and inserting the water container for the humidifier ... 34
Switching the refrigeration appliance on ... 34
Switching off the refrigeration appliance ... 34
To note when switching off for longer periods of time ... 34

The correct temperature ... **36**
Temperature display ... 37
Setting the temperature ... 37
Possible temperature settings ... 37

Using Super cool ... **38**

Selecting further settings ... **39**
Explanation of the different settings ... 39
Party mode ... 39
Holiday mode ... 39
Switching the lock function on ... 39
Sabbath mode ... 40
Information on Sabbath mode ... 41
Automatic door opening (ActiveDoor) ... 41
Changing the time before the door alarm is triggered ... 44
Miele@home ... 44
Changing the volume of the alarms and buzzers ... 45
Adjusting the display brightness ... 45
Switching off Demo mode ... 46
Resetting the settings to their default settings ... 46
Information ... 46
Charcoal filter change indicator ... 46
Cleaning mode ... 46

Storing food in the fridge zone ... **49**
Different storage zones ... 49
Food which is not suitable for storage in the refrigerator section ... 50
Notes on buying food ... 50
Storing food correctly ... 50

Storing food in the PerfectFresh Active zone ... **51**
PerfectFresh Active zone ... 51
Humidity-controlled compartment ... 51
Humidifier ... 53
Dry compartment ... 54

Defrosting ... **56**

Contents

Cleaning and care **57**
Cleaning agents 57
Preparing the refrigeration appliance for cleaning 57
Cleaning the inside of the appliance 57
Cleaning accessories by hand or in the dishwasher 58
Removing and dismantling accessories for cleaning 59
Cleaning the door seal 66
Cleaning the ventilation gaps 66
After cleaning 66

Problem solving guide **67**

Noises **75**

Service **77**
Contact in the event of a fault 77
EPREL database 77
Warranty 77

EU Conformity declaration **78**

UK Conformity declaration **79**

Copyrights and licences **80**

This refrigeration appliance complies with current safety requirements. Inappropriate use can, however, lead to personal injury and material damage.

Please read the operating and installation instructions carefully before using the refrigeration appliance for the first time. They contain important information on safety, installation, use and maintenance. This is to protect yourself from injury, and from damaging your refrigeration appliance.

In accordance with standard IEC 60335-1, Miele expressly and strongly advises that you read and follow all information provided on installing the refrigeration appliance, as well as the safety notes and warnings.

Miele cannot be held liable for injury or damage caused by non-compliance with these instructions.

Keep these operating and installation instructions in a safe place and pass them on to any future owner.

Correct application

▶ This refrigeration appliance is intended for use in the home and in similar environments, for example
– in shops, offices and similar work settings
– by the guests in hotels, motels, bed & breakfasts and other typical home settings.
This refrigeration appliance is not intended for outdoor use.

▶ This appliance is intended for domestic use only for cooling and storing food and drink.
It must not be used for any other purpose.

▶ This refrigeration appliance is not suitable for storing and keeping cool medicines, blood plasma, laboratory preparations or similar substances or products that are subject to the Medical Device Directive. Incorrect use of the refrigeration appliance for such purposes may cause deterioration of the items stored. The refrigeration appliance is also not suitable for use in areas where there is a risk of explosion.
Miele cannot be held liable for damage caused by improper or incorrect use or operation of the appliance.

▶ The appliance can only be used by people with reduced physical, sensory or mental capabilities, or lack of experience and knowledge, if they are supervised whilst using it, or have been shown how to use it in a safe way and recognise and understand the consequences of incorrect operation.

Safety with children

▶ Children under 8 years of age must be kept away from the refrigeration appliance unless they are constantly supervised.

▶ Children 8 years and older may only use the appliance unsupervised if they have been shown how to use it in a safe way and recognise and understand the consequences of incorrect operation.

▶ Children must not be allowed to clean or maintain the appliance unsupervised.

▶ Please supervise children in the vicinity of the appliance and do not let them play with it.

▶ Danger of suffocation! Whilst playing, children could become entangled in packaging (such as plastic wrapping) or pull it over their head and suffocate. Keep packaging material away from children.

Technical safety

▶ The coolant circuit has been checked for leaks. The refrigeration appliance complies with statutory safety requirements and the appropriate EU directives.

▶ Warning: fire hazard/flammable materials. This symbol is on the compressor and indicates flammable materials. Do not remove this sticker.

The refrigerant inside the appliance (details on the data plate) is environmentally friendly but flammable.
The use of this refrigerant does, however, sometimes lead to a slight increase in the noise level of the appliance. In addition to the noise of the compressor, you might be able to hear the refrigerant flowing around the cooling circuit. Unfortunately, this cannot be avoided, but it does not affect the performance of the refrigeration appliance.
When transporting and installing the refrigeration appliance, ensure that no parts of the cooling circuit are damaged. Splashes of refrigerant can damage the eyes and leaking refrigerant can ignite.
In the event of damage:

- Avoid naked flames or anything which creates a spark.
- Disconnect the refrigeration appliance from the mains electricity supply.
- Ventilate the room where the refrigeration appliance is located for several minutes.
- Contact the Miele Customer Service Department.

▶ The more refrigerant there is in a refrigeration appliance, the larger the room it should be installed in. In the event of a leakage, if the appliance is in a small room, there is the danger of a combustible gas/air mixture building up. For every 8 g of refrigerant at least 1 m^3 of room space is required. The amount of refrigerant in the refrigeration appliance is stated on the data plate inside the appliance.

▶ To avoid the risk of damage to the appliance, make sure that the connection data (fuse rating, frequency and voltage) on the data plate corresponds to the household supply.
Check that this is the case before connecting the appliance. Consult a qualified electrician if in any doubt.

▶ The electrical safety of this appliance can only be guaranteed when correctly earthed. It is essential that this standard safety requirement is met. If in any doubt please have the electrical installation tested by a qualified electrician.

▶ Temporary or permanent operation on an autonomous power supply system or a power supply system that is not synchronised with the mains power supply (e.g. island networks, back-up systems) is possible. A prerequisite for operation is that the power supply system complies with the specifications of EN 50160 or an equivalent standard.
The function and operation of the protective measures provided in the domestic electrical installation and in this Miele product must also be maintained in isolated operation or in operation that is not synchronised with the mains power supply, or these measures must be replaced by equivalent measures in the installation. As described, for example, in the current version of BS OHSAS 18001–2 ISO 45001.

▶ If the electrical connection cable supplied is damaged, it must only be replaced by an original spare part to prevent a hazard for the user. Miele can only guarantee the safety of the appliance when original Miele spare parts are used. For safety reasons, such replacement may only be carried out by a qualified specialist or the Miele Customer Service Department.

▶ Do not connect the appliance to the mains electrical supply by a multi-socket adapter or extension lead. These are a fire hazard and do not guarantee the required safety of the appliance.

▶ If moisture gets into electrical components or into the mains connection cable, it could cause a short circuit. Therefore, do not operate this refrigeration appliance in areas which are exposed to moisture (e.g in a garage or utility room).

▶ This appliance must not be used in a non-stationary location (e.g. on a ship).

▶ Do not use a damaged appliance. It could be dangerous. Check the appliance for visible signs of damage.

▶ For safety reasons, this appliance may only be used after it has been built in.

▶ The appliance must be isolated from the electricity supply during installation, maintenance and repair work.

▶ Unauthorised installation, maintenance and repairs can cause considerable danger for the user.
Installation, maintenance and repairs must only be carried out by a Miele authorised technician.

▶ While the appliance is under warranty, repairs should only be undertaken by a Miele authorised service technician. Otherwise the warranty is invalidated.

▶ Faulty components must only be replaced with genuine Miele original spare parts. Miele can only guarantee the safety standards of the appliance when Miele replacement parts are used.

▶ This refrigeration appliance is supplied with a special lamp to cope with particular conditions (e.g. temperature, moisture, chemical resistance, abrasion resistance and vibration). This lamp must only be used for the purpose for which it is intended. The lamp is not suitable for room lighting. Replacement lamps may only be fitted by a Miele authorised technician or by the Miele Customer Service Department. This refrigeration appliance contains several light sources with at least energy efficiency class F.

Proper installation

▶ When installing the refrigeration appliance, it is a mandatory requirement to follow the installation instructions supplied with it.

▶ Always wear protective gloves when transporting and installing the refrigeration appliance.

▶ Two people are required to install the refrigeration appliance.

▶ Change the door hinging (if necessary) as described in the installation instructions supplied with the appliance.

▶ Only install the refrigeration appliance in a solid, rectangular and level housing unit, positioned on an even and level floor.

Correct use

▶ This refrigeration appliance is designed for use within specific ambient temperatures (climate range). Do not use in ambient temperatures for which it is not designed. The climate range is stated on the data plate in the interior cabinet of the refrigeration appliance. A lower ambient temperature will cause the compressor to switch off for longer periods, meaning that the refrigeration appliance is unable to maintain the required temperature.

▶ Do not cover or block the air vents as this could impair the efficiency of the appliance, increase the electricity consumption and could cause damage to the components.

▶ If storing food which contains a lot of fat or oil in the appliance or the door, make sure that it does not come into contact with plastic components as this could cause stress cracks or break the plastic.

▶ Risk of fire and explosion. Do not store explosive materials in the refrigeration appliance or any products containing propellants (e.g. spray cans). Electrical components can cause flammable mixes of gases to ignite.

▶ Danger of explosion. Do not operate any electrical equipment (e.g. an electric ice-cream maker) inside the refrigeration appliance. Danger of sparking and explosion.

▶ Observe the manufacturer's “use-by” dates and storage instructions given on food to avoid the risk of food poisoning. Storage times will depend on several factors, including the freshness and quality of the food, as well as the temperature at which it is stored.

Accessories and spare parts

▶ Only use original Miele accessories. If other parts are used, warranty, performance and product liability claims will be invalidated.

▶ Miele will guarantee to supply functional spare parts for a minimum of 10 years and up to 15 years following the discontinuation of your refrigeration appliance.

Cleaning and care

▶ Do not use any oils or grease on the door seals, as these will cause the seals to deteriorate and become porous with time.

▶ Do not use a steam cleaning appliance to clean or defrost this appliance.
Steam could reach electrical components and cause a short circuit.

▶ Sharp edged or pointed objects will damage the evaporator, causing irreversible damage to the appliance. Do not use sharp edged or pointed objects to

- remove frost and ice,
- separate frozen food or remove ice trays.

▶ Do not place electric heaters or candles in the appliance to defrost it. These can damage the plastic parts.

▶ Do not use defrosting sprays or de-icers, as they could contain substances which could damage the plastic parts or which might cause the build-up of gases and pose a danger to health.

Transport

▶ Always transport the appliance in an upright position and in its original transport packaging to avoid damage in transit.

▶ Danger of injury and damage to the appliance. The refrigeration appliance is very heavy and must be transported by two people.

Disposal of your old appliance

▶ Children playing could become trapped in the appliance and could suffocate.

- Remove the appliance doors.
- Remove the drawers.
- Leave the adjustable shelves in the refrigeration appliance so children cannot climb inside.
- If your old refrigeration appliance has a door lock, destroy it. This will prevent the risk of children playing accidentally locking themselves in and endangering their lives.

▶ Risk of electric shock!

- Cut the plug off the mains connection cable.
- Cut the mains connection cable off the old appliance.

▶ Dispose of the plug and mains connection cable separately from the old appliance.

▶ During and after disposal, make sure that the refrigeration appliance is not placed near petrol or other flammable gases and liquids.

▶ Risk of fire due to escaping oil or refrigerant!
The refrigerant and oil inside the appliance are flammable. In high enough concentrations, escaping refrigerant or oil may ignite if they come into contact with an external heat source.
During disposal, make sure that the cooling circuit is not damaged in order to prevent refrigerant and oil escaping in an uncontrolled manner (see the data plate for details of the refrigerant).

▶ Splashes of coolant can damage the eyes. Be careful not to damage any part of the pipework whilst awaiting disposal, e.g. by

- puncturing the coolant channels in the condenser,
- bending any pipework, or
- scratching the surface coating.

Symbol on the compressor (depending on model)

This information is only relevant for recycling. There is no risk during normal operation.

▶ The oil in the compressor can be fatal if swallowed or if it penetrates the airways.

Disposing of the packaging material

The packaging material is used for handling and protects the appliance from transport damage. The packaging material used is selected from materials which are environmentally friendly for disposal and can generally be recycled.

Recycling the packaging material reduces the use of raw materials. Use material-specific collection points for valuable materials and take advantage of return options. Your Miele dealer will take the packaging material away.

Disposing of your old appliance

Electrical and electronic appliances contain many valuable materials. They also contain certain materials, compounds and components which were essential for their correct functioning and safety. These could be hazardous to human health and to the environment if disposed of with household waste or if handled incorrectly. Please do not, therefore, dispose of your old appliance with household waste.

Take care not to damage your refrigeration appliance before or during disposal in an authorised, environmentally friendly manner.
This is to ensure that refrigerant in the cooling circuit and oil in the compressor is contained, and will not leak into the environment.

Instead, please make use of officially designated collection and disposal points to dispose of and recycle electrical and electronic appliances in your local community, with your dealer or with Miele, free of charge. By law, you are solely responsible for deleting any personal data from the old appliance prior to disposal. You are legally obliged to remove any old batteries which are not securely enclosed by the appliance and to remove any lamps without destroying them, where this is possible. These must be taken to a suitable collection point where they can be handed in free of charge. Please ensure that your old appliance poses no risk to children while being stored for disposal.

Installation

Installation site

⚠ Risk of damage and danger of injury due to the refrigeration appliance tipping over.
This refrigeration appliance is very heavy and can tip forwards when the appliance door is open.
Keep the appliance door(s) closed until the refrigeration appliance has been built in. The refrigeration appliance must be secured in its building-in niche in accordance with the operating and installation instructions.

⚠ Fire risk and risk of damage from appliances which give off heat.
Appliances which give off heat can catch fire and set fire to the refrigeration appliance.
This refrigeration appliance must not be installed underneath a hob.

⚠ Fire risk and danger of damage from open flames.
Open flames can set fire to the refrigeration appliance.
Keep open flames (e.g. a candle) away from the refrigeration appliance.

This appliance should be installed in a dry, well-ventilated room.

⚠ Risk of damage due to high humidity.
In environments with high humidity, condensation can build up on external refrigeration appliance panels.
This condensate can cause corrosion on external appliance panels.
Install the refrigeration appliance in a dry and/or air-conditioned room with sufficient ventilation.
After installation please make sure that the appliance door(s) closes (close) properly and the refrigeration appliance is installed in accordance with these installation instructions. It is essential to comply with the specified ventilation cutout requirements.

When deciding on the installation site, please bear in mind that your refrigeration appliance will use more energy if installed near to a heater, a cooker or other appliance that gives off heat. Avoid direct sunlight.
The higher the ambient temperature, the longer the compressor runs and the higher the energy consumption is.

When installing the refrigeration appliance, please note the following:

- The socket must be easily accessible in an emergency, not concealed behind the appliance.
- The plug and mains connection cable must not touch the rear of the refrigeration appliance as they could be damaged by vibrations from the appliance.
- Other appliances must also not be plugged into a socket located directly behind the refrigeration appliance.
- When installing the refrigeration appliance, make sure that the mains connection cable does not get trapped or damaged.
- Do not position or operate multi-socket adapters, distributor strips or other electronic devices (e.g. halogen transformers) at the rear of the appliance.
- The floor at the installation site must be horizontal and level and must be as high as the surrounding floor.

Side-by-side combinations

⚠ Risk of damage due to condensation on external appliance panels.
In environments with high humidity, condensation can build up on external appliance panels, which can cause corrosion.
Do not place different refrigeration appliance models directly next to or on top of one other.

Exception: your refrigeration appliance can be installed next to another refrigeration appliance with an integrated heating unit if each appliance is built into a separate niche. Please contact your dealer for specific information about which combinations will work with your refrigeration appliance.

Climate range

This refrigeration appliance is designed for use within specific ambient temperatures (climate range). Do not use in ambient temperatures for which it is not designed. The climate range is stated on the data plate in the interior cabinet of the refrigeration appliance.

Climate range	Ambient temperature
SN	10 to 32 °C
N	16 to 32 °C
ST	16 to 38 °C
T	16 to 43 °C
SN-ST	10 to 38 °C
SN-T	10 to 43 °C

A lower ambient temperature leads to the compressor switching off for longer periods. This can cause the internal temperature in the refrigeration appliance to rise with the risk of food deteriorating and going off.

Ventilation

⚠ Risk of fire and damage due to insufficient ventilation.
If the refrigeration appliance is not ventilated sufficiently, the compressor will run more frequently and for longer periods. This will result in increased energy consumption and a higher operating temperature for the compressor. This may, in turn, cause damage to the compressor.
Please ensure that there is adequate ventilation around the refrigeration appliance.
It is essential to observe the required ventilation gaps.
The ventilation gaps must not be covered or blocked in any way.
They must also be regularly dusted.

Air at the back of the refrigeration appliance gets warm. The appliance housing unit must therefore be constructed to allow sufficient space for ventilation (see “Installation dimensions” and the installation instructions provided).

Changing the door hinging

It is **not** possible to change the door hinging as the refrigeration appliance features automatic door opening.

Furniture door panel

Horizontal and vertical gaps

Depending on the style of kitchen furniture, the thickness and edge radius of the furniture door panel and the gap that runs around the door, vertically and horizontally, are specified.

It is essential to pay attention to the following:

- **Horizontal gap**

The gap between the furniture door panel and the housing unit door above or below it must be at least 3 mm.

- **Vertical gap**

If the gap between the refrigeration appliance furniture door panel and the adjoining housing unit door or wall on the hinged side is too small, the appliance door could collide with the adjoining housing unit door or wall when opened.
It may be necessary to adjust the size of this gap to suit the thickness and edge radius of the appliance furniture door.

This must be taken into consideration when planning your kitchen and when replacing an old refrigeration appliance with a new one to ensure the installation conditions required are met.

Appliance furniture door thickness **A** [mm]	Gap **X** [mm] for different edge radii **B**			
	R0	R1.2	R2	R3
≥16–19	min. 3			
20	5	4	4	3.5
21	5.5	5	4.5	4
22	6.5	6	5.5	5

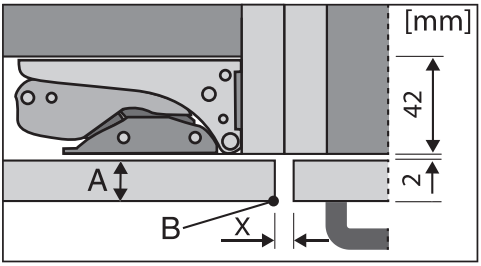

Adjoining kitchen furniture front

A = Furniture front thickness
B = Edge radius
X = Gap

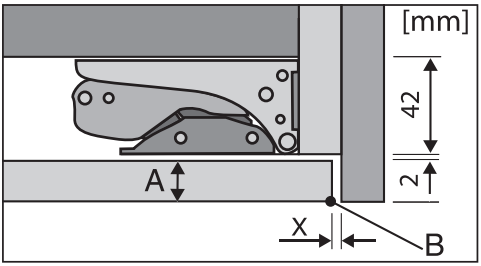

Adjoining side wall

A = Furniture front thickness
B = Edge radius
X = Gap

Tip: Fit a spacer between the housing unit carcase and the side wall. This way you will get a sufficiently wide gap.

Weight of the furniture door

⚠ If the furniture door panel is too heavy, this can cause damage.
Fitting a furniture door panel which is heavier than the maximum permitted weight could damage the hinges. This can cause subsequent functional problems.

The maximum permissible weight of the furniture door is:

Refrigeration appliance	kg
K 7797 ...	26

Building-in dimensions

Installation in a tall unit/side view

All dimensions are given in mm.

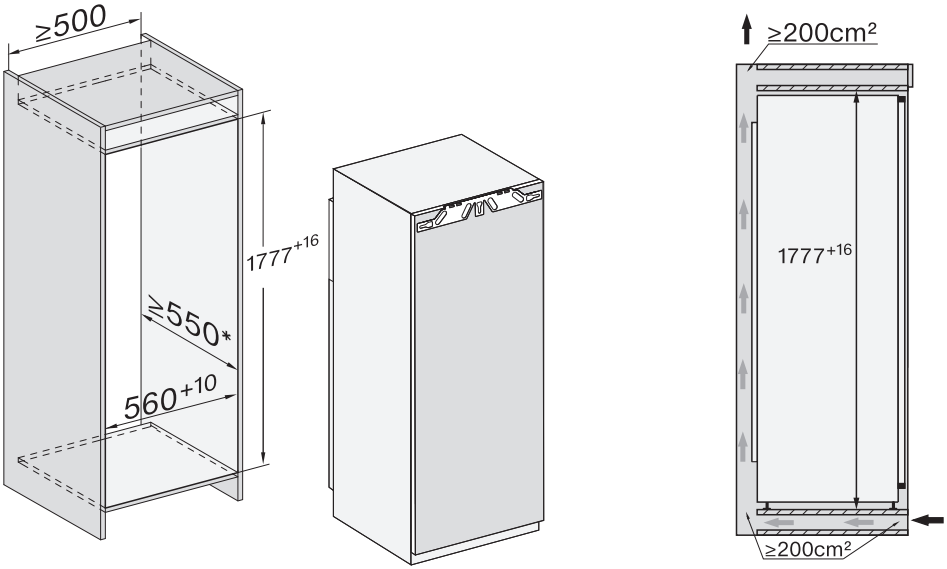

* The declared energy consumption was calculated in a 560 mm deep niche. The refrigeration appliance is fully functional in a 550 mm niche but the energy consumption will be slightly higher.

Before installation, ensure the housing unit dimensions are the correct size.

Connections and ventilation

All dimensions are given in mm.

The specified ventilation cross-sections must be adhered to in order to ensure the correct functioning of the refrigeration appliance.

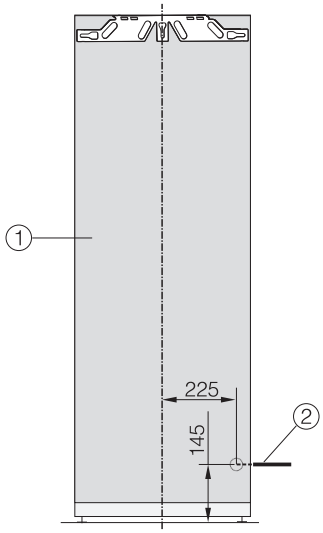

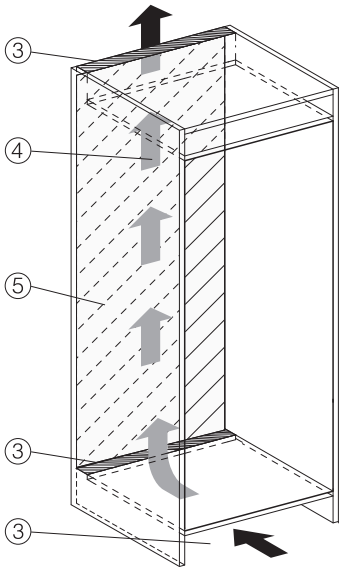

① View from the front

② Mains connection cable, length = 2200 mm

③ Ventilation cross-section min. 200 cm^2

④ Ventilation

⑤ No connection sockets in this area

Electrical connection

The refrigeration appliance must only be connected to an earthed socket using the mains connection cable supplied.

The socket must be easily accessible after the refrigeration appliance has been installed. If the socket is not easily accessible, ensure that a suitable means of disconnection is provided on the installation side for each pole.

⚠ Risk of fire from overheating.
Connecting the refrigeration appliance to a multi-socket plug adapter or to an extension lead can overload the cable.
For safety reasons, do not use an extension lead or multi-socket adapter.

The electrical installation must comply with VDE 0100 requirements.

For safety reasons, we recommend using a type ⎓ residual current device (RCD) in the assigned electrical installation for connecting the refrigeration appliance.

If the mains connection cable is damaged, it must only be replaced with a specific mains connection cable of the same type (available from the Miele Customer Service Department). For safety reasons, such replacement may only be carried out by a qualified specialist or the Miele Customer Service Department.

These operating instructions and the data plate indicate the nominal power consumption and the appropriate fuse rating. Compare this information with the data of the on-site electrical connection. If in any doubt, consult a qualified electrician.

Temporary or permanent operation on an autonomous power supply system or a power supply system that is not synchronised with the mains power supply (e.g. island networks, back-up systems) is possible. A prerequisite for operation is that the power supply system complies with the specifications of EN 50160 or an equivalent standard. The function and operation of the protective measures provided in the domestic electrical installation and in this Miele product must also be maintained in isolated operation or in operation that is not synchronised with the mains power supply, or these measures must be replaced by equivalent measures in the installation. As described, for example, in the current version of VDE-AR-E 2510-2.

Connecting the refrigeration appliance

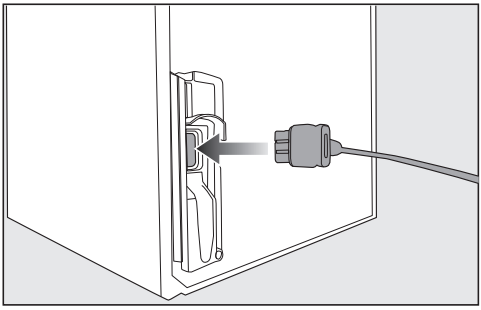

- Insert the plug connector into the socket at the back of the refrigeration appliance.

Make sure that the plug connector has clicked into position correctly.

- Insert the plug of the refrigeration appliance into the socket.

The refrigeration appliance is now connected to the electricity supply.

How to save energy:

Installation site

The refrigeration appliance has to cool more often at higher ambient temperatures and consumes more energy in the process. Therefore, you should:

- Install the refrigeration appliance in a well-ventilated room.
- Do not install the refrigeration appliance near to a heat source (heater element, cooker).
- Protect the refrigeration appliance from direct sunlight.
- Ensure an ideal ambient temperature of 20 °C.
- Clean the ventilation gaps on a regular basis to remove any dust.

Temperature setting

The colder the temperature, the higher the energy consumption. The following settings are recommended:

- 4 to 5 °C in the refrigerator section.
- PerfectFresh Active zone just above 0 °C.

Use

Energy consumption is increased by heat input and impeded air circulation. Therefore, you should:

- Only open the appliance door(s) when necessary and for as short a time as possible. Arrange the food in such a way that makes it easy to find in the appliance.
- Always close the appliance door(s) properly after opening them.
- Allow hot food and drinks to cool down before placing them in the refrigeration appliance.
- Store food well packaged or covered.
- Do not overfill the compartments to allow air to circulate.
- Place frozen food in the fridge zone to defrost.
- Keep drawers and shelves arranged as they were when the appliance was delivered.

Guide to the appliance

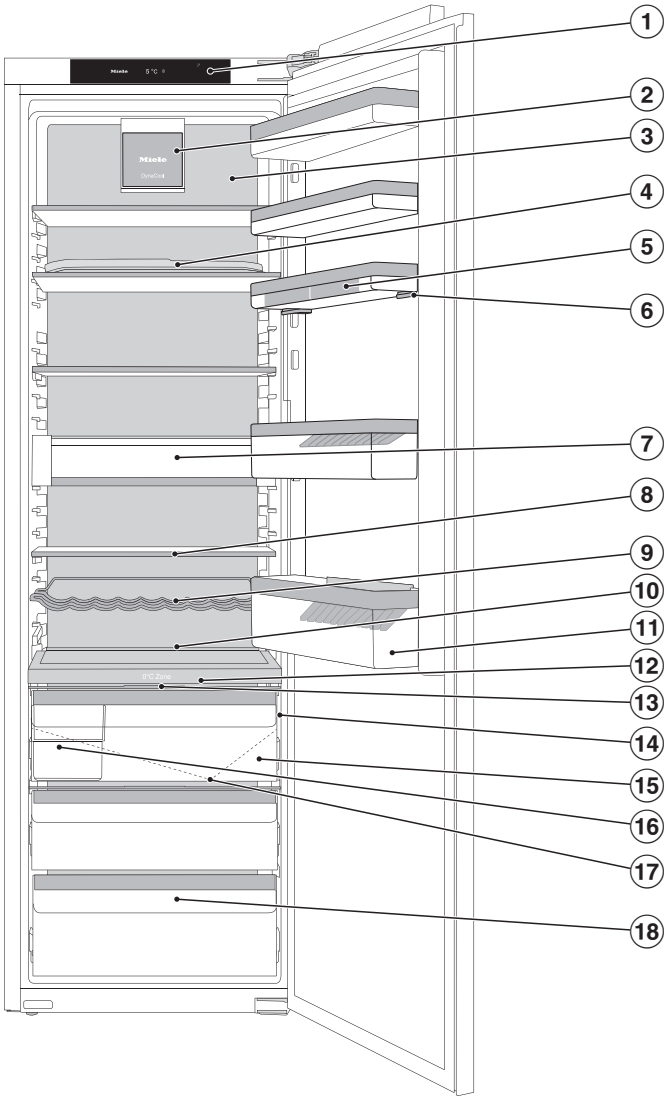

This image shows an example of an appliance model with right-hand hinging.

① Display
② Fan with lighting
③ Dry rear panel to prevent condensate
④ Adjustable shelf with pivotable glass shelf (FlexiTray)
⑤ Egg tray
⑥ Door shelf with fine adjustment
⑦ Storage drawer (CompactCase) for storing small containers
⑧ Adjustable shelf with lighting (FlexiLight 2.0)
⑨ Flexible bottle rack
⑩ Space for a baking tray (ComfortSize)
⑪ Bottle shelf with bottle holder
⑫ Dividing plate with bottle rack; with humidifier and water container for the humidity-controlled compartment
⑬ Cover for setting the moisture level in the humidity-controlled compartment
⑭ Sliding switch for setting the sensitivity of the knock sensor (ActiveDoor)
⑮ Humidity-controlled compartment for fruit and vegetables (PerfectFresh Active zone)
⑯ Organisation box
⑰ Condensate channel and drain hole
⑱ Dry compartment with low temperature for food which goes off quickly (PerfectFresh Active zone)

Guide to the appliance

Start display

The display can be scratched by pointed or sharp objects, e.g. pens.
Only touch the display with your fingertips.
It is possible that the display will not react to finger contact if your fingers are cold.

① Temperature display for fridge zone

② Settings mode ⚙
sensor control for adjusting various settings in Settings mode

③ Display for Miele@home connection status
(only visible when the Miele@home function has been set up)

④ Demo mode display
(only visible when the Demo mode function has been switched on)

Using the appliance

- Touch the area/symbol you want on the start display.
- Swipe left or right across the display until the value/symbol you want is shown in the middle.
- Tap on the option you want on the display to confirm.

The selected value/symbol will light up orange (except for a few exceptions).

- To leave the Settings level, tap on ⮌ or *OK*.

Settings mode

In Settings mode, you can select the following appliance functions and alter their settings to some extent:

Symbol	Function	Factory default
	Switch the Party mode function on or off (see “Selecting further settings”)	Off
	Switch the Holiday mode function on or off (see “Selecting further settings”)	Off
	Switching the lock function on or off (see “Selecting further settings”)	(off)
	Switching off the refrigeration appliance	—
	Switch the Sabbath mode function on or off (see “Selecting further settings”)	Off
	Call up information on the Sabbath mode function (see “Selecting further settings”)	—
	Configure or deactivate the automatic door opening (ActiveDoor) function. (See “Selecting additional settings”)	
	Activate/deactivate ActiveDoor (only appears when ActiveDoor is activated, see “Selecting further settings”)	
	Change the set door opening angle (only appears if a door opening angle has already been set, see “Selecting further settings”)	
	Change the time before the door alarm is triggered (see “Selecting further settings”)	1:00
	Adjust the temperature level in the PerfectFresh Active zone (see “The correct temperature”)	5

Guide to the appliance

	Switching the humidifier on or off or adjusting its intensity (see “Storing food in the PerfectFresh Active zone”)	Off
@	Set up the Miele@home function for the first time, activate and deactivate WiFi or reset the network configuration (see “Selecting further settings”)	App
/	Switch the keypad tone on or off	On
/	Change the volume of the alarms and buzzers or switch them off entirely (see “Selecting further settings”)	On /level 5
	Change the display brightness (see “Selecting further settings”)	Level 4
°C / °F	Change the temperature unit (°Celsius or °Fahrenheit)	°C
	Switch the Demo mode function off (only visible when switched on) (see “Selecting further settings”)	Off
	Reset to default settings (see “Selecting further settings”)	—
i	Call up information (model identifier and serial number) about your refrigeration appliance (see “Selecting further settings”)	—
	Switch on the reminder to change the charcoal filter (see “Optional accessories”) (see “Selecting further settings”)	Off
	Switch Cleaning mode on or off (see “Cleaning and care”)	Off

Automatic door opening (ActiveDoor)

This function must be activated and configured in Settings mode ⚙ (see “Selecting further settings – Automatic door opening (ActiveDoor) ⊡A”).

During automatic door movement, ⊡A flashes in the display and a buzzer sounds.

When automatic door opening is activated, you can open the appliance door using the knocking signal or voice commands (depending on the model).

When the function is activated, the refrigeration appliance runs at a higher power level. This means that the movement noises may be louder. The energy consumption will be higher.

The appliance door can be opened manually if you decide not to activate ActiveDoor or if you deactivate it.

⚠ Risk of injury during automatic opening and closing of the appliance door

Body parts such as fingers can become jammed in the area of the door opening range and in the door hinge area.

Leave the area of the door opening range clear.

Do not reach into the door hinge area or inside the refrigeration appliance with your hand while the door is closing.

Do not block the door.

⚠ Risk of damage while the appliance door is closing automatically

Drawers or telescopic runners that are pulled out can be damaged (depending on the model).

Push in drawers fully.

Push in telescopic runners fully after removing a drawer.

... via knocking signal

Knock twice on the outside or inside of the door to open or close it.

The sensitivity of the knocking signal can be changed at any time.

Sensitivity of the knock sensor

A sliding switch is used to set the sensitivity of the knock sensor. This sliding switch is located on the hinge-side outer edge in the lower third of the door (see “Guide to the appliance”).

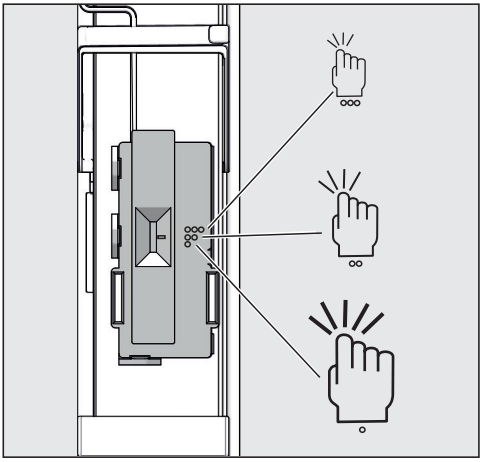

Settings

Symbol	Sensitivity
3 dots	High
2 dots	Medium
1 dot	Low

The factory default setting is medium.

... via voice commands

depending on model

In addition to the knocking signal, you can also open and close the appliance door via voice commands. All settings are configured in the Miele app.

- Activate and configure ActiveDoor (see “Selecting further settings”, section “1. Activate and configure ActiveDoor for the first time”).

For information on the following settings, see “Miele@home” in “Selecting further settings”.

- Install the Miele app on your smartphone.
- Establish a WiFi connection to your refrigeration appliance.
- Register your refrigeration appliance in the Miele app by following the instructions in the app.
- Install a voice assistant.

Adjusting the interior fittings

Using the door shelf fine adjustment

Use the fine adjustment if you need greater height clearance on the door shelf/bottle shelf.

You can change the height of the door shelf while it is loaded.

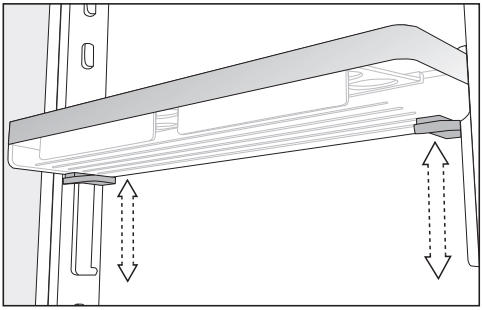

- Hold the door shelf in both hands, press the grey buttons on both sides under it and move it.

Repositioning the door shelf with fine adjustment

Only move the door/bottle shelves in the appliance door when they are empty.

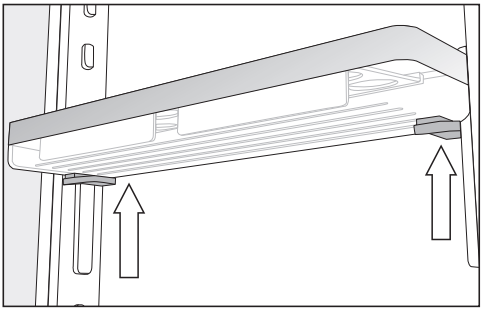

- Take hold of the sides of the door shelf with both hands so that you are touching each of the grey buttons underneath it.

- Press the grey buttons at the same time and slide the door shelf up and off the guide rails.

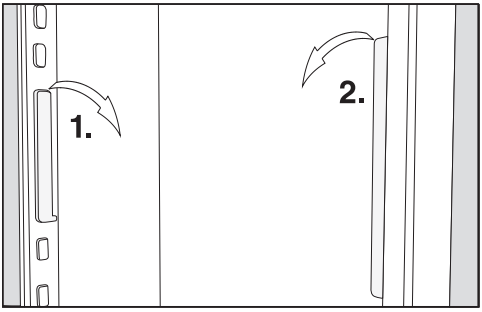

- Remove the guide rail from the lugs and move it to the desired position.
- Move the second guide rail parallel to the first rail.
- Push the shelf down onto the guide rails.

Moving the door shelf/bottle shelf

Only move the door/bottle shelves in the appliance door when they are empty.

- Push the door/bottle shelves upwards, then remove them by pulling them forwards.
- Replace the door/bottle shelves at the required height.

Clipping the egg trays on

- Clip the egg trays onto the rear edge of the door shelf.

Adjusting or removing the bottle holder

The non-slip fins of the bottle holder make bottles more secure when you open and close the appliance door.

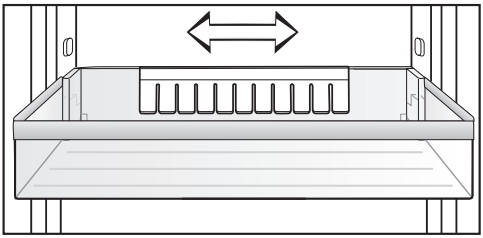

The bottle holder can be moved to the left or right to create more room for drink cartons.

The bottle holder can be removed completely, e.g. for cleaning:

- pull the bottle holder up to remove it.

Moving the adjustable shelf/ adjustable shelf with lighting

The shelves can be adjusted according to the height of the food.

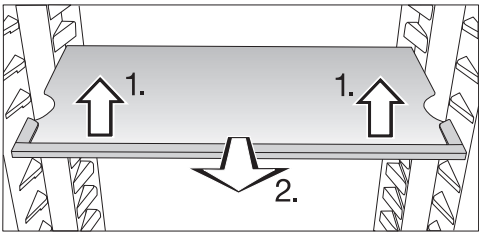

- Raise the shelf slightly at the front and pull it forwards a little.
- Lift it until the notches at the side are in line with the shelf supports. The shelf can then be raised or lowered to the required level.
- Push the shelf in.

Make sure that the shelf with lighting clicks into position.

Stoppers prevent the shelves from being dislodged by mistake.

Using the storage drawer (CompactCase)

The storage drawer (CompactCase) is suitable for storing small packets and tubes.

However, it can also be moved down slightly to accommodate larger packets.

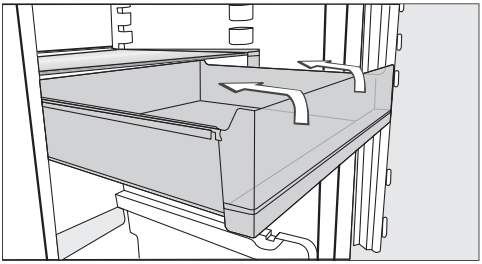

- Pull the drawer out as far as it will go. Tilt the drawer slightly upwards and remove it.

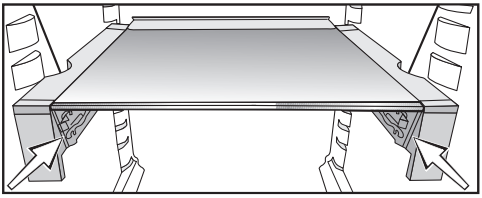

- Now insert the drawer from above into the lower holder in the support as required.

Moving the storage drawer (CompactCase)

- Remove the drawer.

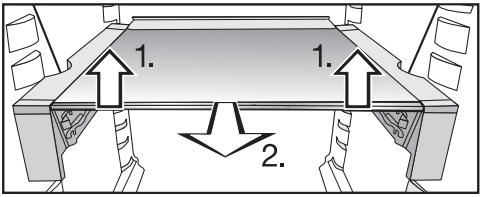

- Use both hands to raise the shelf and support slightly at the front 1.).
- Pull the shelf slightly forwards 2.) and lift it until the notches on the left and right are in line with the shelf supports.
- You can raise or lower the shelf to the required level.
- Slide the shelf backwards as far as it will go.
- Insert the drawer from above into the upper or lower holder in the support as required.

Adjustable shelf with pivotable glass shelf (FlexiTray)

⚠ Risk of damage caused by loading too much food and not distributing items evenly.
Loading too much food and not distributing items evenly can damage the pivotable glass shelf.
Do not exceed the maximum load size of 8 kg. Arrange food items evenly across the full surface of the shelf.

The pivotable glass shelf can be turned 180° clockwise, improving access to the food placed at the back.

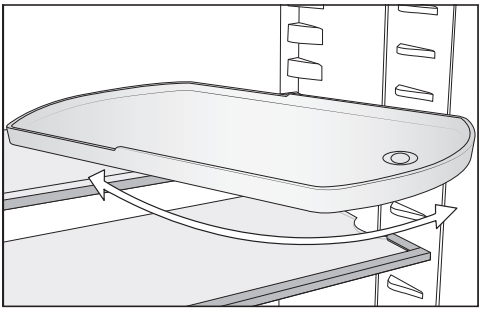

⚠ Danger of injury from dropping the glass shelf.
The pivotable glass shelf can come out when removing the adjustable shelf, causing the glass shelf to drop out of the tray and break.
Keep hold of the pivotable glass shelf when removing the adjustable shelf.

You can move the adjustable shelf with pivotable glass shelf as you wish.

Moving the bottle rack

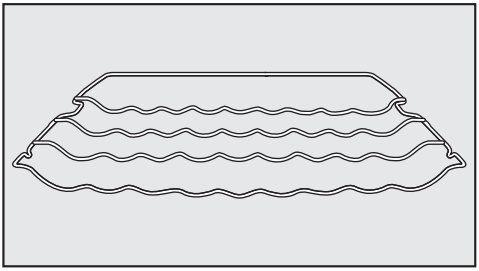

The bottle rack can be placed at different positions in the refrigeration appliance.

- Raise the bottle rack slightly at the front, and pull it forwards a little until the notch at the side is in line with the shelf support. It can then be raised or lowered to the required level.

The rear rail must face upwards to prevent bottles from touching the back of the appliance.

Stoppers prevent the bottle rack from being dislodged by mistake.

Using the bottle rack in the dividing plate

In the dividing plate, either the bottle rack or the glass shelf can be used.

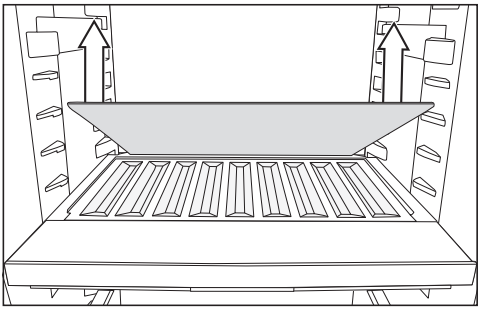

- Remove the glass shelf at the back of the dividing plate and keep it in a safe place.
- Place the bottles as far back as possible with the bases at the back of the appliance.

Tip: If the bottles hang over the edge of the bottle rack, adjust the bottom bottle shelf by moving it upwards.

Removing and reinserting the organisation box

The additional organisation box in the PerfectFresh Active zone makes it easier for you to organise your food.

- Lift the box at the rear first when you want to remove it.
- To reinsert the organisation box in the drawer, place the front section in first.

Inserting the adapters for the baking tray

The supplied adapters enable you to insert a baking tray in your refrigerator section with ease. The baking tray can be no more than 466 mm wide, 386 mm deep and 50 mm high.

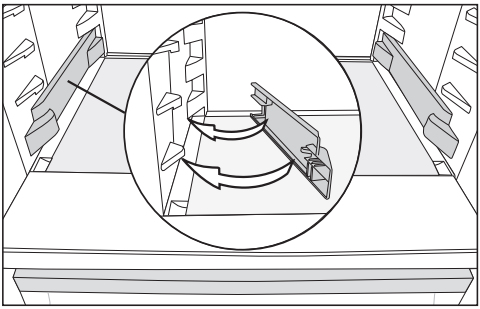

- Snap the adapters into place on the lowermost shelf supports on the side walls of the refrigerator section.
- Open the appliance door as far as it will go.

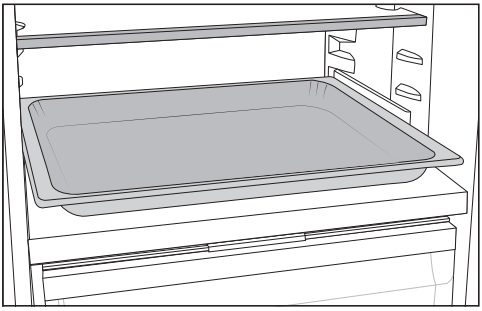

- Place the baking tray on the adapters in the refrigerator section and slide it in as far as it will go.

Tip: Let the baking tray cool down to room temperature before putting it in the refrigerator section.

Moving the charcoal filters

KKF-FS charcoal filters with holder (Active AirClean) are available as optional accessories (see “Optional accessories”).

When storing very strong smelling food (e.g. very ripe cheese):

- Place the holder with the charcoal filters on the shelf where this food is kept.
- Change the filters sooner if necessary.
- Use more charcoal filters (with holders) in the appliance (see “Optional accessories”).

The holder for the charcoal filters sits on a protective strip at the back of the shelf.

- To move the charcoal filter, pull the holder upwards to remove it from the protective strip.
- Then pull the protective strip off the shelf.
- Refit it on the shelf you wish to use it on.

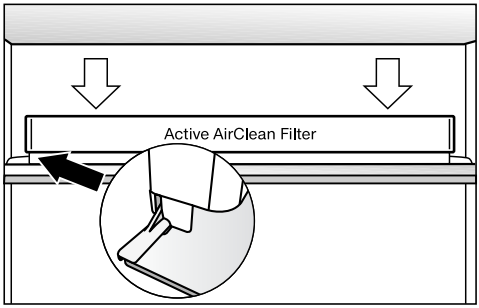

- Refit the holder on the protective strip.

Accessories supplied

Adjustable shelf with pivotable glass shelf (FlexiTray)

Adapters for the baking tray

Egg tray

Bottle holder

Organisation box

Flexible bottle rack

Optional accessories

A range of useful Miele accessories and care products are available for your appliance.

Optional accessories can be ordered from the Miele webshop. They can also be ordered from the Miele Customer Service Department (see end of this booklet for contact details) or from your Miele dealer.

Multi-purpose microfibre cloth

The microfibre cloth is suitable for removing fingerprints and light soiling from surfaces such as stainless steel, glass, plastic and chrome without the use of chemicals.

MicroCloth Kit

The MicroCloth Kit contains a universal cloth, a glass cloth and a polishing cloth. These cloths are extremely resistant to tearing and very robust. Thanks to very fine microfibres these cloths achieve an excellent cleaning performance.

MicroCloth HyClean

The MicroCloth HyClean is a multi-purpose antibacterial cloth and is particularly tear resistant and durable. It can be used wet or dry, with or without cleaning agent.

KKF-FS charcoal filter with holder (Active AirClean)

Charcoal filters neutralise unpleasant odours in the refrigerator section for improved air quality.

KKF-RF replacement charcoal filters (Active AirClean)

Replacement filters to the fit the holder are available. We recommend replacing the charcoal filters every 6 months.

Bottle rack

For a description, see “Guide to the appliance – Adjusting the interior fittings”.

Organisation box

For a description, see “Guide to the appliance – Adjusting the interior fittings”.

Before using for the first time

- Remove all packaging material and protective film.
- Clean the inside of the appliance and the accessories (see “Cleaning and care”).

Connecting the refrigeration appliance

- Connect the refrigeration appliance to the electricity supply as described in “Electrical connection”.

Miele will then appear on the appliance display, followed by ⏻.

Filling and inserting the water container for the humidifier

- Fill the water container for the humidifier with fresh drinking water (see “Storing food in the PerfectFresh Active zone – Humidity-controlled compartment”).
- Place the water container in the dividing plate between the refrigerator section and PerfectFresh Active zone (see “Storing food in the PerfectFresh Active zone – Humidity-controlled compartment”).

Switching the refrigeration appliance on

- Open the appliance door.
- Tap ⏻ on the display.

The refrigeration appliance will start to cool and the interior lighting will come on when the appliance door is opened.

The refrigeration appliance will adjust to the preset temperature.

To enable the temperature to get sufficiently cold inside the refrigeration appliance, allow the appliance to run for a few hours before placing food in it. Do not place food in the refrigeration appliance until it has reached the preset temperature.

Switching off the refrigeration appliance

- Touch the temperature display on the display.
- Swipe right until ⏻ is shown in the middle.
- Tap ⏻.

The cooling and interior lighting are switched off.

⏻ will appear in the display.

Please note: The refrigeration appliance is not disconnected from the power supply when it is switched off.

To note when switching off for longer periods of time

If, during a long absence, the refrigeration appliance is switched off but not cleaned and the door is left shut, there is a danger of mould building up inside the appliance.

It is essential to clean the refrigeration appliance before a long period of absence.

If the refrigeration appliance is not going to be used for a longer period of time, observe the following:

- Switch the refrigeration appliance off.

- Switch off at the wall and withdraw the plug from the socket, or disconnect the fuse.
- Take the water container for the humidifier out of the appliance, empty it, then clean and dry it.
- Clean the refrigeration appliance and leave the door ajar to air the appliance and avoid odours building up inside.

The correct temperature

It is very important to set the correct temperature to ensure the shelf life of food. Reducing the temperature reduces the growth rate of microorganisms. Food does not spoil as quickly.

The temperature in the refrigeration appliance will rise:

- The more often the appliance door is opened and the longer it is kept open
- The more food that is stored in it
- The warmer the food is which is being put into it
- The higher the ambient temperature surrounding the refrigeration appliance. This refrigeration appliance is designed for use within specific ambient temperatures (climate range). Do not use in ambient temperatures for which it is not designed.

... in the refrigerator section and in the PerfectFresh Active zone

We recommend a temperature of **4 °C** in the refrigerator section.

The temperature in the PerfectFresh Active zone is controlled automatically and maintained at **0 to 3 °C**.

Automatic temperature distribution (DynaCool)

The fan switches on automatically when the cooling system for the refrigerator switches on. It distributes the temperature in the appliance to all areas more evenly so that all the food will be chilled to about the same degree.

Temperature display

In normal operation, the temperature display shows the **current average refrigerator section temperature** inside the refrigeration appliance.

Depending on the ambient temperature and the temperature setting, it can take the appliance a few hours to reach the temperature required and for this temperature to then be shown as a constant temperature on the display.

Setting the temperature

- Touch the temperature display on the display.
- Swipe left or right until the temperature you want is shown in the middle.
- Tap on the temperature you want to confirm.

The temperature display will then change back to the current temperature in the refrigeration appliance.

Possible temperature settings

- Refrigerator section: 3 to 9 °C

Adjusting the temperature level in the PerfectFresh Active zone

The temperature in the PerfectFresh Active zone is automatically controlled between 0 and 3 °C.

However, if you would like it to be warmer or colder, e.g. when storing fish, you can adjust the temperature slightly in increments.

- Tap ⚙.
- Swipe left or right until 🌡↕ is shown in the middle.
- Tap 🌡↕.
- Swipe left or right until the setting you want (1: lowest temperature; 9: highest temperature) is shown in the middle.
- Tap on the setting you want to confirm.

The factory default setting for the temperature level is 5.
Under certain circumstances, a setting from 1 to 4 can cause the temperature to fall below 0 °C. This can cause food to freeze.
Check the temperature setting.

If you change the temperature setting:

- check the temperature display after a few hours. It will take this long for the appliance to give an accurate reading.

- Wait for approx. 6 hours if the refrigeration appliance is not very full
- Wait for approx. 24 hours if the refrigeration appliance is full

If, after this time, the temperature is still too high or too low:

- Adjust the temperature again.

SuperCool ❄

When switched on, the SuperCool function ❄ can be used to rapidly reduce the temperature in the **fridge zone** to its lowest setting (depending on the ambient temperature). The refrigeration appliance will work at full power and lower the temperature. Select this function for the rapid chilling of large amounts of fresh food or drink.

When the SuperCool function ❄ is switched on, the appliance may make more noise than usual.

The SuperCool function ❄ should be switched on **4 hours before** placing food or drinks in the fridge zone.

The SuperCool function ❄ will switch itself off automatically after approx. 12 hours. The refrigeration appliance will then run at normal power again.

Tip: To save energy, you can switch the SuperCool function ❄ off yourself once food and drinks are sufficiently chilled.

Switching SuperCool ❄ on and off

- Touch the temperature display for the fridge zone.
- Touch ❄ to switch the SuperCool function on and off again.

When the SuperCool function is **switched on**, ❄ will light up orange.

- Tap on the temperature display to leave the Settings level.

Explanation of the different settings

Only the settings that require further explanation are described below.

The door alarm and other warnings are automatically suppressed when you are in Settings mode ⚙.

Party mode

The Party mode function is particularly recommended for the rapid chilling of large amounts of fresh food or drink.

Tip: Switch on the Party mode function approx. 4 hours before placing food and drinks in the appliance.

When Party mode is switched on, the SuperCool function is switched on automatically.

Party mode cannot be switched on if Holiday mode is switched on.

The Party mode function will switch itself off automatically after approx. 24 hours. However, you can switch the Party mode function off early at any time.

Holiday mode

The Holiday mode function is useful when you go on holiday, for example, if you do not wish to switch off the refrigerator section completely or do not need a high degree of cooling.

If Holiday mode is switched on, this will be indicated on the start display. It can be switched off via the start display or Settings mode ⚙.

The refrigerator section is regulated at a temperature of 15 °C, which automatically sets the temperature in the PerfectFresh Active zone to between 9 and 12 °C. In this way, the refrigerator section remains in operation whilst saving energy.

Food which does not go off quickly can be stored in the refrigeration appliance for some time at this moderate refrigerator temperature. Energy consumption is lower than in normal operation.
This also prevents the build-up of odours and mould, which can occur if the refrigerator section is switched off and the appliance door is closed.

⚠ Health risk caused by decomposing food.
The usability and quality of food in the fridge zone may deteriorate if the temperature remains above 4 °C for an extended period.
Only ever switch on the Holiday mode function for a limited period.
Do not store any temperature-sensitive food which goes off easily, such as fruit, vegetables, fish, meat and dairy products, during this time.

Switching the lock function on

When the lock function is switched on, it protects the refrigeration appliance from being switched off unintentionally and being adjusted unintentionally by unauthorised persons, e.g. children.

- Tap ⚙.
- Swipe left or right until is shown in the middle.
- Tap .

When the lock function is switched on, 🔒 will light up orange.

- Close the appliance door. Only then will the lock function 🔒 be active.

Deactivating the lock function 🔒/🔓 temporarily

If you want to adjust the temperature, for example, you can deactivate the lock function temporarily:

- Touch the temperature display.
- Touch 🔒 for approx. 6 seconds.

The display switches to the temperature controls.

- Now select the required settings.

Closing the appliance door will reactivate the lock function 🔒.

Switching the lock function 🔒/🔓 off completely

- Tap ⚙.
- Touch 🔒 for approx. 6 seconds.
- Swipe left or right until 🔒 is shown in the middle.
- Tap 🔒.

When the lock function is switched off, 🔓 will light up.

Sabbath mode

The refrigeration appliance offers a Sabbath mode for the purposes of religious observance.

If Sabbath mode is switched on, this will be indicated on the start display.

The display switches off after 3 seconds.

When Sabbath mode is switched on, you cannot make any settings on your refrigeration appliance.

Ensure that the appliance door is properly closed, as visual and audible alarms are switched off.

The Sabbath mode function will switch off automatically after approx. 80 hours.

When Sabbath mode is switched on, the following are deactivated:

- Interior lighting when the door is opened
- All visual and audible signals
- The temperature display
- An active WiFi connection

All other functions switched on previously remain activated.

⚠ Health risk caused by decomposing food.
As power failures are not indicated while Sabbath mode is active, food may be exposed to increased temperatures for a certain period of time. This will reduce the storage life of the food.
If there is a power failure during Sabbath mode, check the quality of the food.

Switching Sabbath mode off

- Tap on the black display.

will appear in the display.

- Tap .

will light up orange.

- Tap the symbol again.

When Sabbath mode is switched off, the symbol will light up white.

Information on Sabbath mode

This product is certified by Star-K, an international institute for kosher certification.
You can find the Star-K certification version here.

Automatic door opening (ActiveDoor)

The following settings can be configured:

1. Activate and configure ActiveDoor when commissioning the refrigeration appliance or at a later point
2. Deactivate ActiveDoor
3. Activate ActiveDoor if the function has already been configured and deactivated
4. Change the set door opening angle

1. Activate and configure ActiveDoor for the first time

Activation and configuration consist of multiple steps:

Activating ActiveDoor

- Tap ⚙.
- Swipe left or right until A is shown in the middle.
- Tap A.

will light up yellow in the display.

- Tap *OK*.

will light up yellow in the display.
You now need to set the door opening angle.

Setting the door opening angle

Leave the area of the door opening range clear.

- Open the door to the required door opening angle (at least 70°).

Tip: To ensure the drawers can be pulled out without any problems, select a door opening angle of at least 90°.

- Tap *OK*.

will light up yellow in the display.

- Tap *OK*.

- If ⊗ appears in the display, the door opening angle was **not** successfully saved.

  Tap ⊗ to confirm the information.
  will light up yellow in the display.
  Start again from the "Setting the door opening angle" step.

- If ✓ appears in the display, the door opening angle has been saved successfully.

  Tap ✓ to confirm the information.
  will light up yellow in the display.
  You now need to perform a reference run.

Performing a reference run

⚠ Risk of injury during automatic opening and closing of the appliance door

Body parts such as fingers can become jammed in the area of the door opening range and in the door hinge area.

Leave the area of the door opening range clear.

Do not reach into the door hinge area or inside the refrigeration appliance with your hand while the door is closing.

Do not block the door.

⚠ Risk of damage while the appliance door is closing automatically
Drawers or telescopic runners that are pulled out can be damaged (depending on the model).
Push in drawers fully.
Push in telescopic runners fully after removing a drawer.

- Tap *OK*.

The reference run will start. During the reference run, the door will close and open again automatically once.

At the same time, A will flash in the display and a buzzer will sound.

- If ⊗ appears in the display, the reference run was **not** successful.

  Tap ⊗ to confirm the information. A will light up yellow in the display. Start again from the "Ⓐ Activating ActiveDoor" step.

- If ✓ appears in the display, the reference run was successful.

  Tap ✓ to confirm the information. will light up yellow in the display. You now need to save the selected door opening angle.

Saving the selected door opening angle

- Tap *OK*.

If ✓ appears in the display, the door opening angle has been saved successfully.

- Tap ✓ to confirm the information.

Ⓐ will light up orange in the display. ActiveDoor is activated.

2. Deactivate ActiveDoor

- Tap ⚙.
- Swipe left or right until A is shown in the middle.
- Tap A.

Ⓐ will light up orange in the display.

- Tap Ⓐ.

Ⓐ will light up white and ActiveDoor will be deactivated.

3. Activate ActiveDoor

- Tap ⚙.
- Swipe left or right until A is shown in the middle.
- Tap A.

Ⓐ will appear in the display.

- Tap Ⓐ.

Ⓐ will light up orange and ActiveDoor will be activated.

4. Change the set door opening angle

- Tap ⚙.
- Swipe left or right until A is shown in the middle.
- Tap A.

Ⓐ will light up orange in the display.

- Swipe left or right until is shown in the middle.
- Tap .

will light up yellow in the display. You now need to set the door opening angle.

Setting the door opening angle

Leave the area of the door opening range clear.

■ Open the door to the required door opening angle (at least 70°).

Tip: To ensure the drawers can be pulled out without any problems, select a door opening angle of at least 90°.

■ Tap *OK*.

will light up yellow in the display.

■ Tap *OK*.

- If ⊗ appears in the display, the door opening angle was **not** successfully saved.

  Tap ⊗ to confirm the information. will light up yellow in the display. Start again from the "Setting the door opening angle" step.

- If ✓ appears in the display, the door opening angle has been saved successfully.

  Tap ✓ to confirm the information. will light up yellow in the display. You now need to perform a reference run.

Performing a reference run

⚠ Risk of injury during automatic opening and closing of the appliance door

Body parts such as fingers can become jammed in the area of the door opening range and in the door hinge area.

Leave the area of the door opening range clear.

Do not reach into the door hinge area or inside the refrigeration appliance with your hand while the door is closing.

Do not block the door.

⚠ Risk of damage while the appliance door is closing automatically

Drawers or telescopic runners that are pulled out can be damaged (depending on the model).

Push in drawers fully.

Push in telescopic runners fully after removing a drawer.

■ Tap *OK*.

The reference run will start. During the reference run, the door will close and open again automatically once.

At the same time, $_A$ will flash in the display and a buzzer will sound.

- If $_⊗$ appears in the display, the reference run was **not** successful.

  Tap $_⊗$ to confirm the information. $_A$ will light up yellow in the display. Start again from the "Activating ActiveDoor" step.

- If $_✓$ appears in the display, the reference run was successful.

  Tap $_✓$ to confirm the information. will light up yellow in the display. You now need to save the selected door opening angle.

Saving the selected door opening angle

■ Tap *OK*.

If ✓ appears in the display, the door opening angle has been saved successfully.

■ Tap ✓ to confirm the information.

Ⓐ will light up orange in the display. ActiveDoor is activated.

Changing the time before the door alarm is triggered

You can set how quickly the door alarm should sound after an appliance door has been opened.

- Tap ⚙.
- Swipe left or right until is shown in the middle.
- Tap .
- Swipe left or right until the time you want between 30 seconds and 3 minutes 30 seconds is shown in the middle.
- Tap on the setting you want to confirm.

Miele@home

Your refrigeration appliance is equipped with an integrated WiFi module.

Networking is deactivated at the factory.

To use this feature, you will need:

- A WiFi network
- The Miele app
- A Miele user account You can create a user account via the Miele app.

The Miele app will guide you as you connect your refrigeration appliance to your home WiFi network.

Once the refrigeration appliance is connected to your WiFi network, you can use the app to carry out the following activities, for example:

- Call up information on the operating status of your refrigeration appliance
- Change the settings on your refrigeration appliance

Connecting your refrigeration appliance to your WiFi network will increase energy consumption, even when the appliance is switched off.

Make sure that the signal of your WiFi network is sufficiently strong in the place where you want to set up your refrigeration appliance.

Availability of the WiFi connection

The WiFi connection shares a frequency range with other appliances (including microwave ovens and remote control toys). This can give rise to sporadic or even complete connection failures. Therefore, the availability of featured functions cannot be guaranteed.

Miele@home availability

The ability to use the Miele app depends on the availability of the Miele@home service in your country.

The Miele@home service is not available in every country.

For information about availability, please visit www.miele.com.

Miele App

The Miele App is available to download free of charge from the Apple App Store® or from the Google Play Store™.

Download on the App Store

ANDROID APP ON Google Play

Setting up Miele@home for the first time

- Tap ⚙.

- Swipe left or right until @ is shown in the middle.
- Tap @.
- Tap on the connection method you wish to use (app or WPS).

After you have successfully logged in, ᯤ will appear on the start display.

If a connection could not be created, ⊗ will appear.

- In this case, start the process again.

Deactivating or activating the WiFi connection

- Tap ⚙.
- Swipe left or right until @ is shown in the middle.
- Tap @.
- Tap ᯤ to deactivate the WiFi connection.

ᯤ will appear on the display.

- Tap ᯤ to reactivate the WiFi connection.
- Tap ⮌ to exit the menu level.

When the WiFi connection is active, ᯤ will light up on the start display.

Resetting the network configuration

- Tap ⚙.
- Swipe left or right until @ is shown in the middle.
- Tap @.
- Swipe right until ⟲ is shown in the middle.
- Tap ⟲.
- Tap OK.

All entered settings and values for Miele@home are reset to the default settings.

The WiFi connection has been deactivated. ᯤ will go out on the start display.

Reset the network configuration if you are disposing of or selling your refrigeration appliance, or if you are putting a used refrigeration appliance into operation. All personal data is removed from the refrigeration appliance. This will also ensure that a previous owner is no longer able to access the refrigeration appliance.

Changing the volume of the alarms and buzzers 🔊/🔇

You can change the volume of the alarms and buzzers (e.g. in the event of a door alarm or a fault message). Alternatively, you can switch the alarms and buzzers off if you find them annoying.

- Tap ⚙.
- Swipe left or right until 🔊 is shown in the middle.
- Tap 🔊.
- Select the volume you want by swiping the segment bar to the left or right.
- Confirm the volume you want by tapping on the segment bar.

When the alarms and buzzers are switched off, 🔇 will appear.

Adjusting the display brightness ☼

You can adjust the display brightness to the lighting conditions in the room.

- Tap ⚙.
- Swipe left or right until ☼ is shown in the middle.
- Tap ☼.

- Select the brightness you want by swiping the segment bar to the left or right.
- Confirm the brightness you want by tapping on the segment bar.

Switching off Demo mode

Demo mode allows the refrigeration appliance to be presented in the showroom without the cooling system being switched on. This setting is not needed for domestic use.

If Demo mode has been switched on as a default setting, will show on the start display.

- Tap .
- Tap .
- Swipe left or right until is shown in the middle.
- Tap .

After Demo mode has been switched off, the refrigeration appliance shuts down and must be switched on again.

Resetting the settings to their default settings

All settings made on the refrigeration appliance will be reset to default settings (for settings, see “Guide to the appliance”).

- Tap .
- Swipe left or right until is shown in the middle.
- Tap .

will appear on the display.

- Tap *OK*.

The refrigeration appliance shuts down and must be switched on again.

Information

Appliance data (model identifier and serial number) is shown on the display.

Keep this appliance data to hand:

- For integrating the refrigeration appliance into your WiFi network (see “Selecting further settings – Miele@home”) (depending on the model).
- When reporting an appliance fault to the Miele Customer Service Department (see “Service”).
- When retrieving information from the EPREL database (see “Service”).

Charcoal filter change indicator

After inserting the charcoal filter (optional accessory), you must activate the charcoal filter change indicator in Settings mode .

The charcoal filter change indicator on the start display will remind you to replace the charcoal filter approx. every 6 months (see “Cleaning and care – Replacing the charcoal filters”).

Cleaning mode

Cleaning mode makes it easier to clean the fridge zone (see “Cleaning and care”). The interior lighting remains switched on, even though the fridge zone is switched off. The buzzer will stop and the symbols on the display will also go out.

If Cleaning mode is switched on, this will be indicated on the start display.

After cleaning, Cleaning mode must be switched off. If the appliance door is closed for more than 10 minutes, Cleaning mode switches itself off automatically.

Door alarm

Door alarm with manual door opening

The appliance door is left open for an extended period.

The refrigeration appliance is fitted with a door alarm to avoid increased energy consumption and food becoming warm if the door is left open.

If the appliance door is left open for an extended period, will light up yellow in the temperature display. An alarm will also sound and the interior lighting will flash.

The time before the door alarm is triggered can be changed (see “Selecting further settings”).

The door alarm’s audible signal can be switched off (see “Selecting further settings”).

The alarm will stop and will go out in the display as soon as the door is closed.

Switching the door alarm off early

■ Touch in the display.

The alarm will stop, the symbol will go out and the interior lighting will light up again constantly.

If the appliance door is not closed, the door alarm will sound again after around 1 minute.

Door alarm with automatic door opening

ActiveDoor closes after a short time.

The refrigeration appliance is fitted with a door alarm to avoid increased energy consumption and food becoming warm if the door is left open.

If the appliance door is left open for too long, will light up yellow in the display. An alarm will also sound and the interior lighting will flash.

The door alarm’s audible signal can be switched off (see “Selecting further settings”).

After a short time, the door will close automatically. The alarm will stop and will disappear from the display.

Switching the ActiveDoor door alarm off early

■ Touch in the display.

The alarm will stop, the symbol will go out and the interior lighting will light up again constantly.

If the appliance door is not closed, the door alarm will sound again after around 1 minute.

will light up yellow in the temperature display. An alarm will also sound and the interior lighting will flash (see “Door alarm: Appliance door is left open for an extended period”).

⚠ Risk of explosion due to flammable mixes of gases.
Electrical components can cause flammable mixes of gases to ignite.
Do not store explosive materials in the refrigeration appliance or any products containing propellants (e.g. spray cans). The spray cans in question can be identified by the contents printed on the can or by a flame symbol. Electrical components can cause escaping gases to ignite.

⚠ Risk of damage due to greasy or oily foods.
If storing food which contains a lot of fat or oil in the refrigeration appliance or the appliance door, make sure that it does not come into contact with plastic components as this could cause stress cracks or break the plastic.
Make sure that no fat or oil leaks onto the plastic parts of the refrigeration appliance.

If there is insufficient air circulation, the cooling performance will decrease and energy consumption will increase.
To allow air to circulate efficiently, do not pack food too closely together in the appliance.
Do not cover the fan in the rear wall of the appliance.

Different storage zones

Due to natural air circulation, there are different temperature regions in the refrigerator section.

Cold, heavy air sinks to the lowest section of the refrigeration section. Make use of the different zones when placing food in the appliance.

This refrigeration appliance has automatic dynamic cooling, which helps to keep an even temperature when the fan is running. The difference between the various temperature zones is therefore less pronounced.

Warmest area

The warmest area in the refrigerator section is at the top in the front area and in the door. Use this for storing butter and cheese.

Coldest area

The coldest area in the fridge zone is directly above the PerfectFresh Active zone dividing plate and at the back of the appliance. The temperature in the PerfectFresh Active zone compartments is even colder.

A temperature setting of 4 °C combined with appropriate hygiene measures delays the propagation of bacteria, e.g. salmonella and listeria, which can lead to serious food poisoning.

Therefore, you should use these areas in the fridge zone and in the PerfectFresh Active zone to store all delicate and highly perishable food, including:

- Fish, meat, poultry
- Cold cuts, ready meals
- Dishes or baked goods containing eggs or cream
- Fresh dough, cake mixtures, pizza or quiche dough

- Raw milk cheese and other raw milk products
- Hummus, vegetable spreads, plant-based cream cheese substitutes
- Pre-packed vegetables
- Other fresh food (with a label stating it should be kept at a temperature of approx. 4 °C)

Food which is not suitable for storage in the refrigerator section

Not all food is suitable for refrigeration at temperatures below 5 °C, because it may be sensitive to cold. Depending on the type of food, the appearance, consistency, flavour and/or vitamin content may be altered if stored at too cold a temperature.

Food which is sensitive to cold includes:

- Pineapples, avocados, bananas, pomegranates, mangoes, melons, papayas, passionfruit, citrus fruit such as lemons, oranges, mandarins, grapefruit
- Fruit (which is not yet ripe)
- Aubergines, cucumbers, potatoes, peppers, tomatoes, courgettes
- Hard cheeses (e.g. Parmesan, mountain cheese)

Notes on buying food

The freshness of the food when it is first placed in the appliance is the most important factor for how long it stays fresh.
Take into account the use-by date and the correct storage temperature.
Time out of the refrigerator, e.g. transporting food in a warm car, should be kept to a minimum.

Storing food correctly

Ensure that food stored in the fridge zone is in packaging or covered properly (some exceptions apply in the PerfectFresh Active zone).
This will prevent food odours from affecting other food, stop food from drying out and also prevent any cross-contamination of bacteria. This is particularly important when storing meat products. Make sure that food such as raw meat and fish in particular does not come into contact with other food.

By ensuring that the temperature settings are correct and by taking appropriate hygiene measures, you can prolong the storage life of your food considerably. This prevents food waste.

PerfectFresh Active zone

The PerfectFresh Active zone satisfies the requirements of a chill compartment to DIN EN 62552:2020.

The PerfectFresh Active zone provides ideal storage conditions for fruit, vegetables, fish, meat and dairy products. Food stays fresh considerably longer while retaining both flavour and vitamins.

The temperature in the PerfectFresh Active zone is controlled automatically and maintained at 0 to 3 °C. While lower than the temperature in a standard refrigerator section, this is the optimum temperature range for storing fresh food which is not sensitive to cold.

The humidity level in the PerfectFresh Active zone can also be regulated to suit the food being stored. If the humidifier is switched on, water vapour is supplied to the stored fruit and vegetables. The humidifier switches on approximately every 90 minutes and each time the appliance door is opened. Food retains its own moisture if stored at a higher humidity and so does not dry out as quickly.

Remember that the fresher the food when placed in the appliance, the longer it will stay fresh.

Take food out of the PerfectFresh Active zone approx. 30 to 60 minutes before using it. The aroma and taste do not fully develop until the food has reached room temperature.

Humidity-controlled compartment

The upper **humidity-controlled compartment** has a temperature of 0 to 3 °C, and the humidity level is increased depending on the position of the compartment cover: ◊ not increased or ◊◊◊ increased.

Humidity level not increased ◊

When the ◊ setting is used, the humidity-controlled compartment becomes a dry compartment (see “Dry compartment”).

Increased humidity ◊◊◊

At this setting, the humidity-controlled compartment is suitable for storing fruit and vegetables.

Increased humidity in the humidity-controlled compartment can cause a build-up of condensate.

If you find that too much condensate has formed and this is affecting the food, proceed as follows:

Wipe off any condensate with a cloth.

Open the compartment cover by moving it to the low humidity ◊ position.

Switch the humidifier off.

Storing food in the PerfectFresh Active zone

Selecting increased humidity ◊◊◊

When the ◊◊◊ setting is used, the humidifier should be switched on.

The energy consumption does increase slightly when the humidifier is switched on. The appliance may also make more noise than usual.

- Tap ⚙.
- Swipe left or right until is shown in the middle.
- Tap .
- Swipe left until the humidifier intensity you want (1: low humidity; 3: maximum humidity) is shown in the middle.
- Tap on the setting you want to confirm.

The symbol lights up orange.

- Open the drawer of the humidity-controlled compartment.

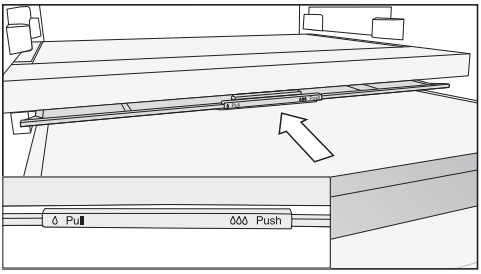

- Slide the compartment cover backwards as far as it will go.

The compartment cover is closed and the humidity remains in the compartment ◊◊◊.

Selecting low humidity ◊

When the ◊ setting is used, the humidifier should be switched off.

- Tap ⚙.
- Swipe left or right until is shown in the middle.
- Tap .
- Swipe right and tap ⏻.

The symbol lights up white.

- Open the drawer of the humidity-controlled compartment.

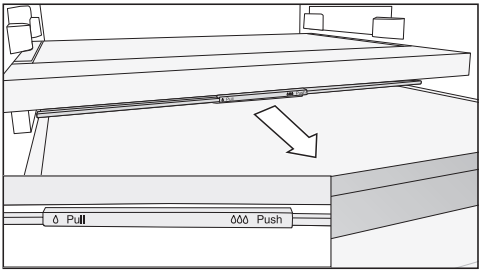

- Pull the compartment cover forwards as far as it will go.

The compartment cover is open and the humidity drops ◊.

If the food is higher than the edge of the drawer, pushing in the drawer may alter the position of the compartment cover, causing it to close.
When filling the drawer, take care to ensure that the food does not touch the compartment cover.

Humidifier

When the humidifier is switched on, water vapour is supplied to the fruit and vegetables stored in the humidity-controlled compartment each time the appliance door is opened and approximately every 90 minutes. The water vapour provides additional humidity in the humidity-controlled compartment.

The humidifier and its water container are located in the dividing plate between the refrigerator section and PerfectFresh Active zone.

Check and pay attention to the following before switching the humidifier on (see “Selecting further settings”):

- The water container must have been cleaned, filled with water and fitted securely.
- The cover for the humidity-controlled compartment must be closed (setting).

The water in the water container should last for approx. 4 months.

The water container will only need to be refilled if the humidifier is no longer producing any water vapour.

⚠ Risk of damage due to incorrectly filled water container.

Liquids containing sugar can damage the humidifier.

Use only fresh drinking water to fill the water container.

⚠ Risk to health due to contaminated water.

Using contaminated water can lead to poisoning.

Use only fresh drinking water to fill the water container.

⚠ Risk to health due to contaminated water.

Bacteria can develop in water which has been sitting in the water container for too long. This poses a risk to your health.

Clean the water container for the humidifier and fill it with fresh drinking water if the refrigeration appliance, the refrigerator section or the humidifier has been switched off for an extended period of time (more than 2 days).

Clean the water container for the humidifier and fill it with fresh drinking water if Holiday mode has been switched on for an extended period of time (more than 2 weeks).

Filling the water container for the humidifier

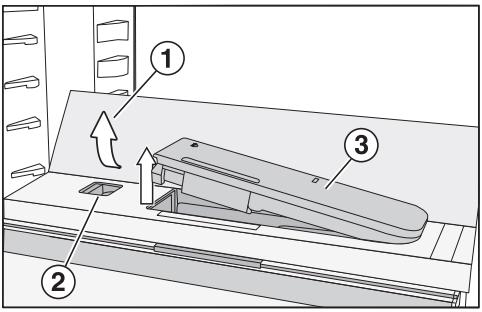

- Press on the outer corners at the back of the glass shelf ①.

The glass shelf will lift up at the front.

- Lift up the shelf and fold it back.

The glass shelf will stand upright.

- Push the slider ② to the left.

The water container ③ will spring out of the recess.

- Remove the water container and fill it up to the marker with drinking water.
- Reinsert the water container.
- Fold the glass shelf ① back down.

Dry compartment

The **dry compartment** has a temperature of 0 to 3 °C and the humidity is not increased.

The dry compartment is ideal for storing food which goes off quickly, such as:

- Fresh fish and shellfish
- Meat, poultry and sausage
- Deli salads
- Dairy products, such as milk, yoghurt, cheese, double cream, etc.
- Plant-based products such as tofu, oat drinks, hummus, vegetable spreads, meat and cheese substitutes, etc.
- Any type of food can in fact be stored in this compartment, as long as it is packaged.

Please note that food rich in protein deteriorates faster than other types of food.
Shellfish, for example, deteriorates faster than fish, and fish deteriorates faster than meat.
For hygiene reasons, always keep these foods **covered or wrapped**.

Observe the following tips if you find that food you have stored does not keep well (e.g. food becomes limp or wilts after only being stored for a short time):

- Only place fresh food in the appliance. The initial condition of the food is crucial to maintaining freshness.
- Clean the compartments in the PerfectFresh Active zone before storing food in them.
- Very wet food should be dried off before storing it.
- Do not store food which is sensitive to cold in the PerfectFresh Active zone (see "Storing food in the fridge zone – Food which is not suitable for storage in the fridge zone").
- Select the correct PerfectFresh Active compartment for the food as well as the correct position for the compartment cover (humidity not increased ◊ or humidity increased ◊◊◊).
- An increased humidity level ◊◊◊ in the humidity-controlled compartment is achieved with the moisture present in the food being stored if the food is stored unwrapped. The more food stored in the compartment, the higher the humidity.
- Do not overfill the compartments.
- If you find that too much condensate has formed when using the ◊◊◊ setting and this is affecting the food:

- Wipe off any condensate with a cloth.
- Place a rack or similar item in the compartment so that excess moisture can drain away.
- Open the compartment cover by moving it to the low humidity ◊ position and switch the humidifier off.

- If the humidity level is too low despite the ◊◊◊ setting, wrap the food in airtight packaging.
- If you think that the temperature in the PerfectFresh Active zone is too high or too low, try regulating it slightly first by changing the temperature in the fridge zone by 1 or 2 °C. If ice crystals start to form on the base of the PerfectFresh Active compartments, increase the temperature as otherwise the cold temperature will damage the food.
- If adjusting the temperature in the fridge zone does not remedy the problem, adjust the temperature in the PerfectFresh Active zone (see "The correct temperature").

Defrosting

Refrigerator section and PerfectFresh Active zone

The refrigerator section and the PerfectFresh Active zone defrost automatically.

The condensate drains through a channel and drain hole into an evaporation system at the back of the refrigeration appliance. The warmth generated by the compressor causes the condensate to evaporate automatically.

Keep the condensate channel and drain hole clean to enable this. Condensate must be able to drain away unhindered at all times.

The data plate located inside the interior cabinet of the refrigeration appliance must not be removed. It contains information which is required in the event of a fault.

Do not let water get into the electronic unit or the lighting.

⚠ Risk of damage due to moisture ingress.
The steam from a steam cleaner can damage plastic and electrical components.
Do not use a steam cleaner to clean the refrigeration appliance.

Cleaning water must not get into the drain hole.

Cleaning agents

Cleaning and conditioning agents used in the interior cabinet of the refrigeration appliance must be food safe.

To avoid damaging the surfaces of the appliance, **do not use the following:**

- Cleaning agents containing soda, ammonia, acids or chlorides
- Cleaning agents containing descaling agents
- Abrasive cleaning agents (e.g. scouring powder, scouring liquid or pumice stones)
- Cleaning agents containing solvents
- Stainless steel cleaners
- Dishwasher cleaner
- Oven sprays
- Glass cleaning agents
- Hard, abrasive sponges and brushes (e.g. pot scourers)
- Eraser stain remover blocks
- Sharp metal scrapers

We recommend using a clean sponge and lukewarm water with a little washing-up liquid to clean the surfaces of the appliance.

Preparing the refrigeration appliance for cleaning

Tip: Switch Cleaning mode on. The cooling in the fridge zone is switched off, but the interior lighting remains switched on.

- Tap ⚙.
- Swipe left or right until is shown in the middle.
- Tap .
- To leave this Settings level, tap ⮌.

If Cleaning mode is switched on, this will be indicated on the start display.

- Take any food out of the appliance and store it in a cool place.
- Take out any removable accessories for cleaning (see “Removing, dismantling and cleaning accessories”).

Cleaning the inside of the appliance

The refrigeration appliance should be cleaned regularly (at least once a month).

If soiling is left on for any length of time, it may become impossible to remove under certain circumstances.
Surfaces may suffer discolouration or damage.
It is therefore best to remove any soiling immediately.

- Clean the **interior** with a clean sponge, lukewarm water and a little washing-up liquid.
- After cleaning, wipe with clean water and dry with a soft cloth.
- Clean the condensate channel and drain hole frequently using a cotton swab or similar item to ensure that condensate can drain away freely.
- Leave the door open to air the refrigeration appliance sufficiently for a short while and to prevent odour build-up.

Cleaning accessories by hand or in the dishwasher

The following components must be cleaned **by hand** only:

- The stainless steel trims or strips
- Flexible bottle rack
- Door shelf with fine adjustment
- The plastic parts of the adjustable shelf with pivotable glass shelf (FlexiTray)
- The rear protective strip and the side supports of the storage drawer (CompactCase)
- Adjustable shelf with printing
- The dividing plate and bottle rack
- All drawers and compartment lids (these vary depending on model)
- The organisation box

The following components are **dishwasher-safe**:

⚠ Risk of damage due to high dishwasher temperatures.
Parts of the refrigeration appliance may become unusable, e.g. deform, if they are washed in the dishwasher at more than 55 °C.
For dishwasher-safe components, always select dishwasher programmes with a maximum temperature of 55 °C.

Contact with natural dyes from carrots, tomatoes and ketchup, etc., may discolour the plastic parts in the dishwasher. This discolouration does not affect the stability of the parts.

- Bottle holder, egg tray
- Shelves and bottle shelves in the appliance door (without stainless steel trim)
- The guide rails for the door shelf with fine adjustment
- Adjustable shelves (without the trim or printing)
- The 2 pieces that make up the water container for the humidifier
- The adapters for the baking tray
- The holder for the charcoal filter (available as an optional accessory)

Removing and dismantling accessories for cleaning

Removing the door shelf with fine adjustment

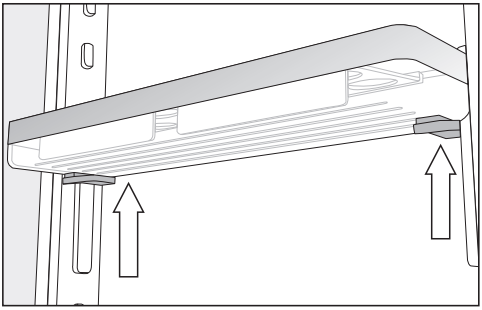

- Hold the door shelf in both hands, press the grey buttons on both sides under it and slide it up off the guide rails.
- Remove the guide rail from the lugs.
- Once you have cleaned it, move the guide rail to the desired position and place the second guide rail parallel to the first rail on the opposite side.
- Push the shelf back down onto the guide rails.

Dismantling the door shelf/bottle shelf

Remove the stainless steel trim before cleaning the door shelf/bottle rack in a dishwasher.

To remove the stainless steel trim, proceed as follows:

- Place the door shelf/bottle rack on the worktop.

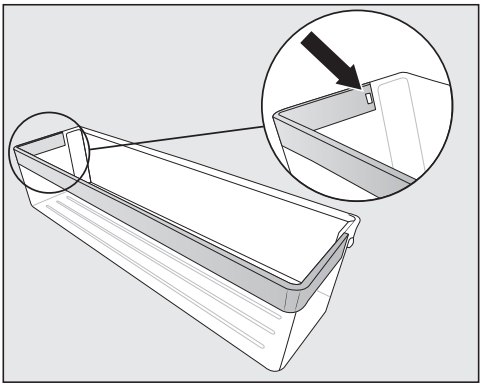

- Press the latch out of the recess. The entire section of stainless steel trim will now come off the shelf.
- After cleaning, reattach the stainless steel trim to the shelf by following the same procedure in reverse.

Dismantling the adjustable shelf/ adjustable shelf with lighting

⚠ Risk of damage as a result of incorrect cleaning.

The stainless steel trim with LED lighting will be damaged if you place it in water for cleaning.

Clean the stainless steel trim with LED lighting with a damp cloth.

Remove the stainless steel trim or stainless steel trim with LED lighting before cleaning the adjustable shelf.

- Place the adjustable shelf on a worktop covered with a soft material (e.g. a tea towel) with the top side facing downward.

⚠ Risk of damage as a result of incorrect handling.
When you remove the stainless steel trim with LED lighting, the metal contacts can be damaged.
These contacts in the front left corner supply power to the LED lighting. Ensure that you always loosen the side on which the contacts are not located first.

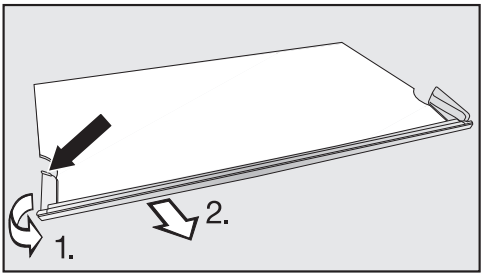

- Grasp the plastic surround on the left-hand side of the stainless steel trim at its rearmost point.

1. Pull the plastic surround from the adjustable shelf and
2. pull the trim off at the same time. The opposite side will also be released.

- After cleaning, reattach the stainless steel trim by following the same procedure in reverse.

Dismantling the adjustable shelf with pivotable glass shelf (FlexiTray)

⚠ Danger of injury from dropping the glass shelf.
The pivotable glass shelf can come out when removing the adjustable shelf, causing the glass shelf to drop out of the tray and break.
Keep hold of the pivotable glass shelf when removing the adjustable shelf.

- Place the adjustable shelf with pivotable glass shelf on a worktop covered with a soft material (e.g. a tea towel).

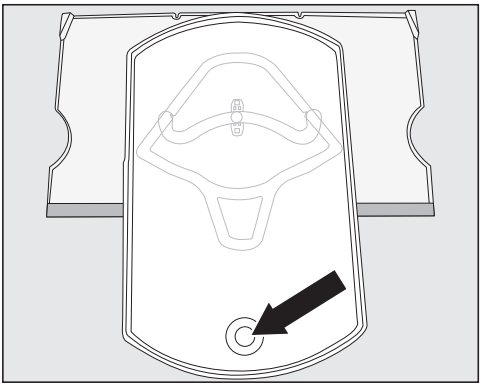

- Bring the tray to the front. Use the opening to lift the glass shelf from underneath and remove it.
- Move the tray back to its original position resting on the adjustable shelf.

The tray can only be detached from the adjustable shelf once it has been returned to its original position and is resting on the adjustable shelf. The fastener must be sitting in the circular recess at the end of the runner guide ①.

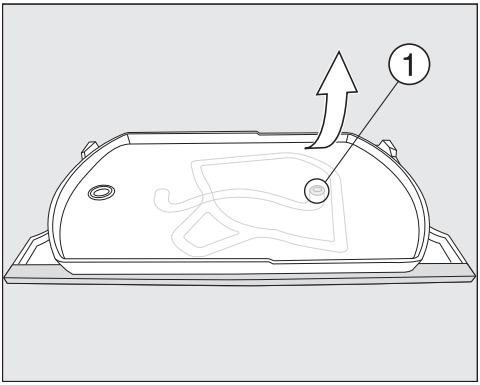

- Take a firm hold of the top right of the bottom adjustable shelf and pull the tray firmly off the adjustable shelf.

The fastener on the tray comes loose from the circular recess at the end of the runner guide ①.

You can now dismantle all the parts and clean them.

Underneath the plastic shelf, there is a glass shelf which is held in place with retainers ② on the outer edge of the adjustable shelf.

The glass shelf can also be removed for cleaning as described below:

- Move the shelf so that the stainless steel trim is at the back and the front edge hangs over the worktop slightly.

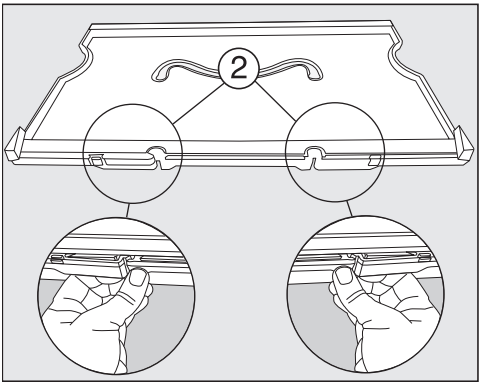

- Release the retainers ② and lift the shelf up.

The glass shelf comes loose. Both parts can now be cleaned.

Assembling the adjustable shelf with pivotable glass shelf (FlexiTray)

- Put the plastic adjustable shelf down on the worktop so that the recess is at the top and the stainless steel trim is at the front.

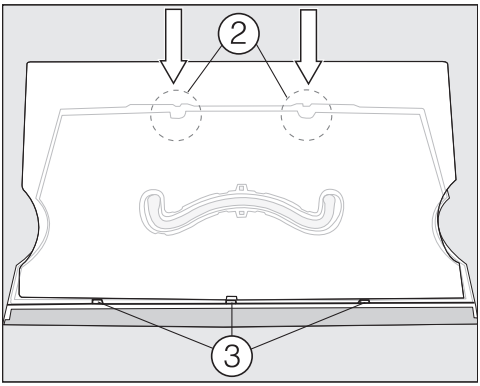

- Place the glass shelf in the grooves ③ and then secure it in the retainers ②.
- Turn over the shelf so that the plastic surface is facing upwards.

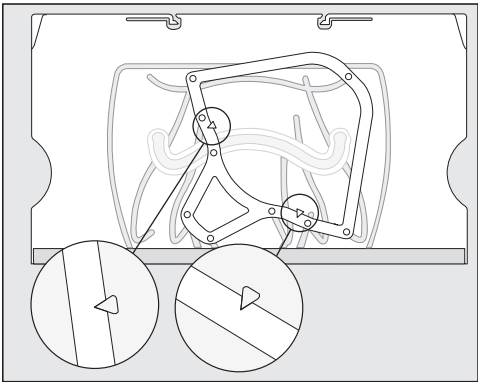

- Place the frame on the adjustable shelf so that the arrows on the adjustable shelf line up with the recesses on the frame.

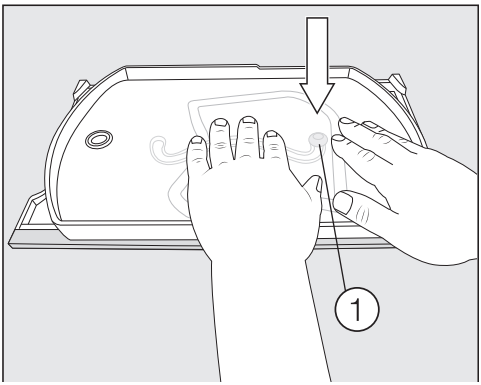

- Take hold of the tray with the fastener facing downwards and push the fastener firmly into the circular recess at the end of the runner guide ①.
- Place the glass shelf in the tray.

Removing and dismantling the storage drawer (CompactCase)

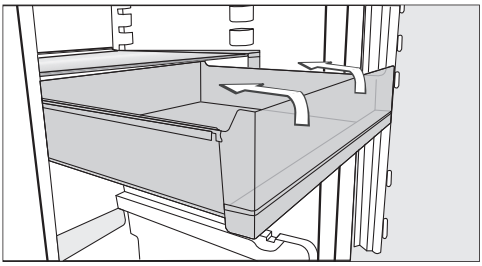

- Pull the drawer out as far as it will go. Tilt the drawer slightly upwards and remove it.

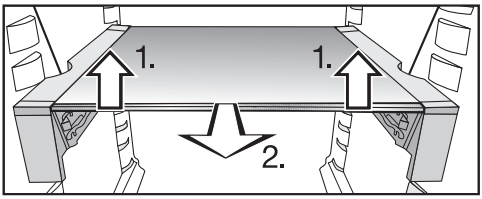

- Use both hands to raise the shelf and the support slightly at the front 1.).

- Pull the shelf slightly forwards 2.) and remove it by lifting it either up or out at an angle, making sure that the notches on the left and right are in line with the shelf supports.
- Place the shelf and support on a worktop covered with a soft material (e.g. a tea towel).

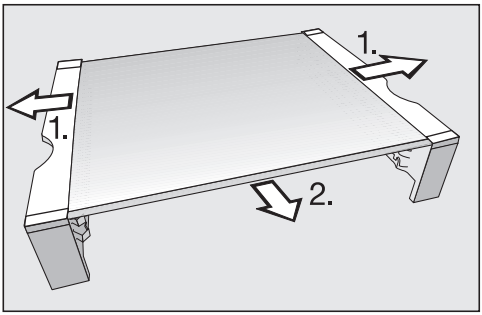

- Pull the supports off the sides of the shelf 1.).
- Pull the stainless steel trim forward and off the shelf 2.).
- After cleaning the shelf, reattach the stainless steel trim, the protective strip and the supports.
- Insert the shelf together with the support into the refrigeration appliance either from above or from the side.
- Slide the shelf back as far as it will go.
- Insert the drawer from above into the upper or lower guide in the support as required.

Removing the drawers from the fridge zone

- Pull the drawer out as far as it will go.

The drawer is clipped into place at the back using clips. It must be unclipped for removal.

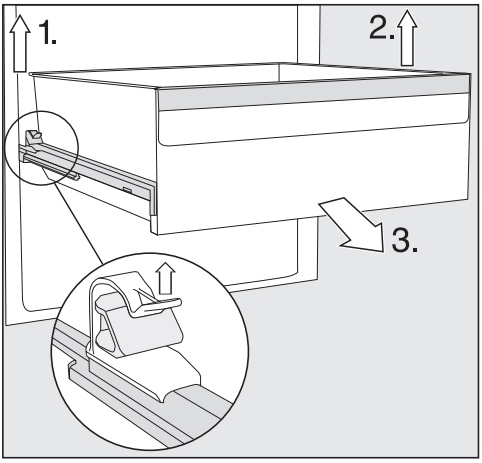

- 1. Lift the left clip and, at the same time, pull the drawer forwards to unclip it.
- 2. Do the same on the opposite side.

The drawer is no longer clipped into place.

- 3. Now pull out the drawer firmly from the front.

Push the telescopic rails back in again to avoid damaging them.

⚠ Risk of damage as a result of incorrect cleaning.

The telescopic rails contain a special lubricant which can be washed out during cleaning, damaging the rails.

Wipe the telescopic rails with a damp cloth to clean them.

Replacing the drawers

- Place the drawer on the fully retracted telescopic rails.
- Push the drawer firmly into the refrigeration appliance until you hear it click into place.

Removing and dismantling the water container for the humidifier

⚠ Risk to health due to contaminated water.

Bacteria can develop in water which has been sitting in the water container for too long. This poses a risk to your health.

Clean the water container for the humidifier and fill it with fresh drinking water if the refrigeration appliance, the refrigerator section or the humidifier has been switched off for an extended period of time (more than 2 days).

Clean the water container for the humidifier and fill it with fresh drinking water if Holiday mode has been switched on for an extended period of time (more than 2 weeks).

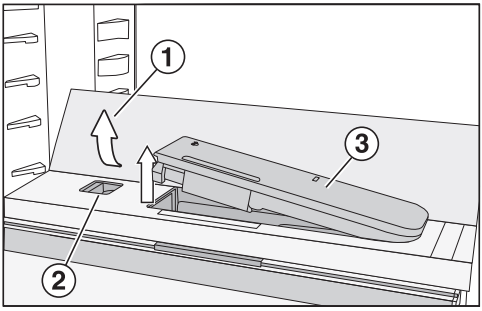

- Press on the outer corners at the back of the glass shelf ①.

The glass shelf will lift up at the front.

- Lift up the shelf and fold it back.

The glass shelf will stand upright.

- Push the slider ② to the left.

The water container ③ will spring out of the recess.

- Remove the water container.

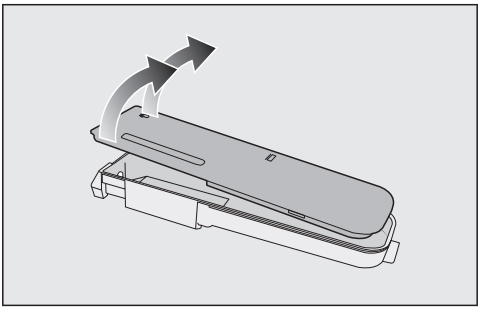

- Separate the water container into its 2 pieces and clean them by hand or in the dishwasher.
- Reinsert the water container.
- Fold the glass shelf ① back down.

Removing the dividing plate and bottle rack

- Remove the glass shelves at the front and back of the dividing plate.

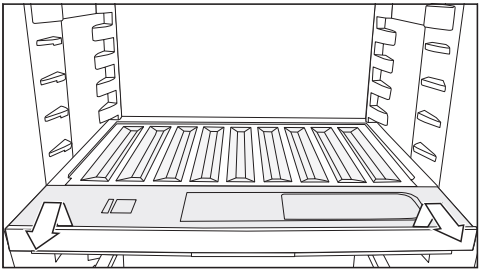

- Lift the bottle rack at the front and pull it out.
- After cleaning, slide the bottle rack all the way in and push it down.
- Place the glass shelves back on the dividing plate.

Removing the compartment cover

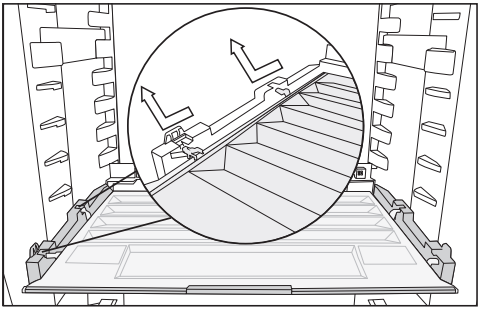

- Lift the cover at the front and pull it out.
- After cleaning, slide the compartment cover back in again.

Replacing the charcoal filters (optional accessories)

Replace the charcoal filters in the holder every 6 months.

The ⊛ symbol on the start display reminds you that the charcoal filter needs to be changed.

Replacement KKF-RF charcoal filters can be obtained from the Miele Customer Service Department, from your dealer or from Miele's website.

- Pull the charcoal filter holder upwards to remove it from the adjustable shelf.

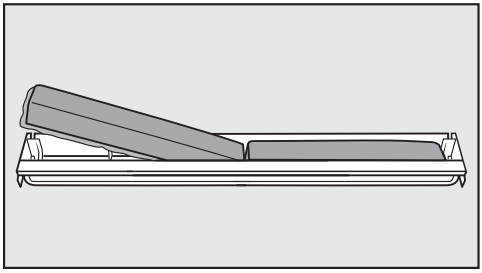

- Remove both charcoal filters and place the new filters with the surrounding edge pointing downwards in the holder.

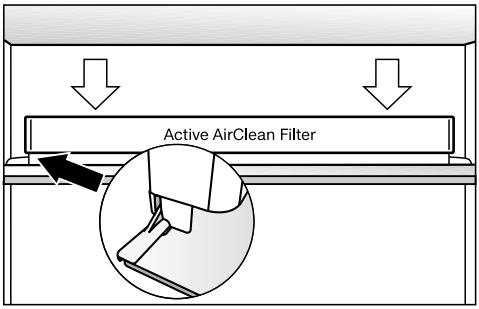

- Place the holder in the middle of the protective strip at the back of the adjustable shelf so that it clicks into position.
- Touch the ⊛ symbol on the display to confirm that the filters have been replaced.

The “Replace charcoal filter” reminder will go out on the display and the counter will be reset.

The ⊛ symbol will go out on the start display.

Cleaning the door seal

⚠ Risk of damage as a result of incorrect cleaning.
If you treat the door seal with oils or grease, it can become porous.
Do not use any oils or grease on the door seal.

- The door seal should be cleaned regularly with clean water, and then wiped dry with a soft cloth.

Cleaning the ventilation gaps

A build-up of dust will increase the energy consumption of the appliance.

- The ventilation gaps should be cleaned on a regular basis with a brush or vacuum cleaner (you could use a Miele vacuum cleaner dusting brush, for example).

After cleaning

- Switch the Cleaning mode function off again by tapping on 🖐 on the start display.
- Tap 🖐 again.

When Cleaning mode is switched off, the 🖐 symbol will light up white.

The refrigeration appliance will start cooling again.

- Replace all shelves and accessories in the refrigeration appliance.
- Switch on the SuperCool ❄ function for a while so that the temperature inside the refrigeration appliance will drop quickly.
- Place food in the refrigeration appliance as soon as it reaches the required coldness.
- Close the appliance door(s).

Many malfunctions and faults that can occur in daily operation can be easily remedied. You can save time and money in many cases, as you do not need to call the Miele Customer Service Department.

Information to help you rectify faults yourself can be found at www.miele.com/service.

The following tables are designed to help you to find the cause of a malfunction or a fault and to resolve it.

To prevent unnecessary loss of temperature it is advisable not to open the door while waiting for the appliance to be serviced.

Problem	Cause and remedy
The refrigeration appliance is not getting cold and the interior lighting does not come on when the appliance door is opened.	The refrigeration appliance is not switched on and the ⏻ symbol is lit up on the display. ■ Switch the refrigeration appliance on.
	The plug is not inserted in the socket correctly. ■ Insert the plug into the socket. If the refrigeration appliance is switched off, ⏻ will appear on the display.
	The mains fuse has tripped. There could be a fault with the refrigeration appliance, the household electrical wiring or another electrical appliance. ■ Contact a qualified electrician or the Miele Customer Service Department.
The compressor runs continuously.	This is not a fault. To save energy, the compressor runs at a lower speed, but for longer, when less cooling is required.
The compressor is switching on more frequently and for longer periods of time. The temperature in the refrigeration appliance is too low.	The ventilation gaps have been covered or become too dusty. ■ Do not block the ventilation gaps. ■ Dust the ventilation gaps regularly.
	The appliance door has been opened too frequently. A large amount of fresh food has been placed in the appliance. ■ Only open the appliance door when necessary and for as short a time as possible. After a while, the temperature will return to normal by itself.
	The appliance door is not properly closed.

Problem solving guide

Problem	Cause and remedy
	■ Close the appliance door. After a while, the temperature will return to normal by itself.
	The ambient temperature is too high. The higher the ambient temperature, the longer the compressor runs. ■ See the information in “Installation – Installation site”.
	The refrigeration appliance was not properly installed in the niche. ■ Install the refrigeration appliance in the niche as described in the installation instructions supplied with it.
	The temperature setting in the refrigeration appliance is too low. ■ Correct the temperature setting.
	The SuperCool function ❄ is still switched on. ■ Switch off the SuperCool function ❄ earlier to save energy.
The compressor comes on less and less often and for shorter periods of time.	This is not a fault. The temperature is too high. ■ Adjust the temperature. ■ Check the temperature again after 24 hours.
Ice or condensation has built up inside the refrigeration appliance. The appliance door may not close correctly.	The door seal has come out of its groove. ■ Check that the door seal is correctly positioned in the groove.
	The door seal is damaged. ■ Check whether the door seal is damaged.
The door seal is damaged or needs to be replaced.	No tools are required to change the door seal. ■ Change the door seal. A replacement is available from Miele or from specialist retailers.

Other problems

Problem	Cause and remedy
The floor of the refrigerator section is wet.	The condensate drain hole is blocked. ■ Clean the condensate channel and drain hole.

Problem	Cause and remedy
There is no audible alarm even though the appliance door has been open for a long time.	This is not a fault. The alarm has been switched off in Settings mode. If you want to switch the audible alarm back on again: ■ Tap ⚙. ■ Swipe left or right until 🔕 is shown in the middle. ■ Tap 🔕. ■ Select the volume you want by swiping the segment bar to the right. ■ Confirm the volume you want by tapping the segment bar. When the alarms and buzzers are switched on, 🔊 will appear.

Display warnings

Message	Cause and remedy
▮ lights up on the start display, the refrigeration appliance does not get cold even though the controls and the interior lighting are working.	Demo mode has been activated. ■ Tap ⏻. ■ Tap ⚙. ■ Swipe left or right until ▮ is shown in the middle. ■ Tap ▮. After Demo mode ▮ has been switched off, the refrigeration appliance shuts down and must be switched on again.
🧹 is lit up on the display and the appliance cannot be used.	The Cleaning mode function is still switched on. ■ Switch the Cleaning mode function off again by tapping on 🧹 on the start display. ■ Tap 🧹 again. When Cleaning mode is switched off, the 🧹 symbol will light up white. The refrigeration appliance will start cooling again.

Problem solving guide

Message	Cause and remedy
Nothing is visible on the display. The display is completely blank.	Sabbath mode is switched on: the interior lighting is switched off and the refrigeration appliance is cooling down. ■ Tap on the black display. will appear on the display. ■ Tap . lights up orange. ■ Tap the symbol again. When Sabbath mode is switched off, the symbol will light up white.
is lit up on the display and the appliance cannot be used.	The lock function has been activated. ■ Unlock the refrigeration appliance temporarily or switch the lock function off completely (see "Selecting further settings – Deactivating the lock function / temporarily/switching off completely").
Automatic door opening is activated. will light up red in the display and an alarm will also sound.	The alarm has activated as the automatic door opening motor has overheated. ■ Wait for a short while and allow the motor to cool down. ■ Move the door manually.
Automatic door opening is activated. will light up yellow in the display and an alarm will also sound.	An obstruction is blocking the movement of the door. ■ Remove the obstruction. ■ Move the door manually.
	The door hinge mechanism is blocked. ■ Do not move the door against the motorised movement. This can damage the door hinges. ■ Contact the Miele Customer Service Department.
The symbol lights up on the start display and a buzzer also sounds.	The charcoal filter change indicator on the start display reminds you that the charcoal filter needs to be changed. ■ Replace the charcoal filter in the holder (see "Cleaning and care – Replacing the charcoal filters (optional accessories)") and touch the symbol on the display to confirm that you have changed the charcoal filter. The symbol will go out on the start display.

Message	Cause and remedy
will light up yellow in the display, an alarm will also sound and the interior lighting will flash.	The **door alarm** has been activated. ActiveDoor is not activated. ■ Touch in the display. The alarm will stop, the symbol will go out and the interior lighting will light up again constantly. ■ Close the appliance door.
⚠ **lights up red in the display and a fault code F with numbers may appear. An alarm will also sound.**	There is a fault. ■ Tap on the display to switch the alarm off. ■ Contact the Miele Customer Service Department. To report the fault, you need the fault code and also the model identifier and serial number of your refrigeration appliance. You can access this information on the display. ■ To do this, touch **i** on the display. The appliance data required will be shown on the display. Confirm with *OK* to exit the information display and the fault code will be shown again on the display. The refrigeration appliance can be switched off directly from the fault message display.
	There is an appliance fault: this display always has priority over any settings which have just been selected. An appliance fault has priority over any current door and/or temperature alarms displayed.

Problems with automatic door opening

Problem	Cause and remedy
The door is changing speed as it opens.	This is not a fault. The speed of the inner door can change based on its load.
⊗ **will appear in the display. The door opening angle cannot be saved.**	The selected door opening angle is too small. ■ Select a door opening angle of at least 70°. A door opening angle of 90° is ideal to ensure the drawers can be pulled out without any problems.

Problem solving guide

Problem	Cause and remedy
The door is not responding to the knocking signal.	Knocking is not hard enough. ■ Increase the sensitivity of the knock sensor (see “Automatic door opening (ActiveDoor)” in “Guide to the appliance”).
	The knocking function is not activated. ■ Activate automatic door opening (see “Automatic door opening (ActiveDoor) $_A$” in “Selecting further settings”).
The door is not responding to voice commands (depending on the model).	The voice assistant is not set up. ■ Configure the setting in the Miele app.
	Automatic door opening is not activated. ■ Activate automatic door opening (see “Automatic door opening (ActiveDoor) $_A$” in “Selecting further settings”).

Problems with the humidifier

Problem	Cause and remedy
The humidifier is not supplying moisture to the food in the PerfectFresh Active zone.	The humidifier is not switched on. ■ Tap on the symbol in Settings mode.
	The compartment cover has been pulled forwards to the “Humidity not increased ◊” setting. ■ Push the compartment cover backwards so that the “Increased humidity ◊◊◊” setting is selected.
	There is not enough water in the water container. ■ Fill the water container with fresh drinking water.
	The water container is not fitted correctly. ■ Insert the water container, making sure it clicks into position correctly.
	There is dirt in front of the humidifier. ■ Clean the humidifier and water container.

Interior lighting

⚠ Risk of electric shock due to exposed, live electrical components.
When removing the lighting cover, there is a risk of coming into contact with live electrical components.
Do not remove the lighting cover. The LED lighting may only be repaired or replaced by the Miele Customer Service Department.

⚠ Risk of injury from LED lighting.
This lighting corresponds to risk group RG 2. If the cover is defective, there is a risk of eye injury.
If the lighting cover is defective, do not look from a close range directly into the lighting with optical instruments (e.g. magnifying glass or similar).

Problem	Cause and remedy
The interior lighting is not working.	The refrigeration appliance has not been switched on. ■ Switch the refrigeration appliance on.
	Sabbath mode is switched on: the display is dark and the refrigeration appliance is cooling. ■ Tap on the black display. will appear on the display. ■ Tap . lights up orange. ■ Tap on the symbol in Settings mode . When Sabbath mode is switched off, the symbol will light up white.
	To avoid overheating, the lighting switches itself off automatically after approx. 15 minutes if the appliance door is left open. If this is not the case, then there is a fault. ■ Call the Miele Customer Service Department.

Problem solving guide

Problem	Cause and remedy
The LED lighting on one of the adjustable shelves is not working.	The shelf has not been positioned correctly on the shelf supports. ■ Check that the shelf is positioned correctly on the shelf supports. The shelf has metal contacts at the front left corner which supply power to the LED lighting. ■ Push the shelf in until it clicks into position.
	The LED lighting on the stainless steel trim is faulty. ■ Replace the stainless steel trim with LED lighting. A replacement is available from the Miele Customer Service Department.
The LED lighting is not working on any of the shelves.	Liquid has been spilt onto the LED lighting on one of the shelves or into the contact openings on the left-hand shelf supports. The safety switch-off mechanism has switched off the LED lighting on all the shelves. ■ Wipe the stainless steel trim with LED lighting with a damp cloth and dry it or leave it outside the refrigeration appliance to dry. ■ Make sure that the contacts are clean and dry before replacing the shelves with lighting. ■ Push the shelf in until it clicks into position. ■ Close the appliance door. The interior lighting will come on when the door is opened again.
	If this is not the case, then there is a fault. ■ Call the Miele Customer Service Department.
The interior lighting is pulsating.	This is not a fault. The door alarm has been activated. The interior lighting pulsates along with the alarm.

The refrigeration appliance is producing various noises during operation.
If the cooling performance is low, the refrigeration appliance will conserve energy but operate for longer. The volume will be lower.
Food will be chilled faster if the cooling performance is high.
The volume will be higher.

Normal noises	What is causing them?
Hissing	Refrigerant is being injected into the cooling circuit.
Bubbling, gurgling, splashing	Refrigerant is circulating through the pipes.
Humming	The refrigeration appliance is cooling.
Clicking	The thermostat is switching the compressor on or off.
Humming, whirring	The fan is running. Automatic door opening is opening or closing the appliance door.
Cracking	Materials are expanding inside the refrigeration appliance.
Rattling	Valves or flaps are active.
Buzzing (refrigeration appliances with water container)	Water is being pumped out of the water container.
Slurping (refrigeration appliances with soft-close mechanism)	The appliance door with soft-close mechanism is being opened or closed.

Please bear in mind that a certain amount of noise is unavoidable (from the compressor and the refrigerant circulating through the cooling circuit).

Noises

Noises	Cause and remedy
Vibrating, rattling, clinking	The refrigeration appliance is uneven. Use a level to check and adjust the alignment of the refrigeration appliance. The refrigeration appliance is aligned by raising or lowering the adjustable feet (depending on the model) underneath it. For niches of 140 cm and more: place the stabilising rods supplied underneath the appliance base.
	Drawers, baskets or shelves are jiggling or are stuck. Check all removable items and refit them correctly.
	Bottles or containers are touching. Separate bottles or containers slightly.
	The transport cable clips (depending on the model) are hanging loose at the back of the appliance. Remove the transport cable clips.

Information to help you rectify faults yourself and about Miele spare parts can be found at www.miele.com/service.

Contact in the event of a fault

In the event of a fault which you cannot remedy yourself, please contact your Miele dealer or Miele Customer Service.

You can book a Miele Customer Service call-out online at www.miele.com/service.

Contact information for Miele Customer Service can be found at the end of this document.

Please quote the model identifier and serial number of your appliance (SN) when contacting Miele Customer Service. Both numbers can be found on the data plate inside the refrigeration appliance or, depending on the model, in Settings mode under Information i.

EPREL database

Since 1 March 2021, information on energy labelling and ecodesign requirements has been available in the European Product Database (EPREL). You can find the product database at the following link https://eprel.ec.europa.eu/. You will be asked to enter the model identifier.

The model identifier can be found on the data plate inside the refrigeration appliance or, depending on the model, in Settings mode under Information i.

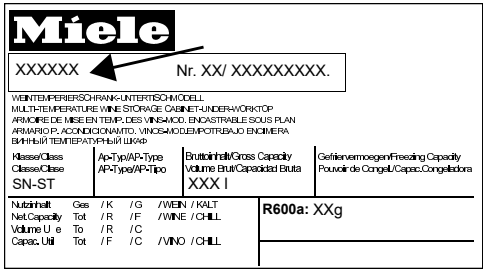

Warranty

For information on the appliance warranty specific to your country please contact Miele. See back cover for address.

In the UK, your appliance warranty is valid for 2 years from the date of purchase. However, you must activate your cover by calling 0330 160 6640 or registering online at www.miele.co.uk.

EU Conformity declaration

Miele hereby declares that this refrigerator complies with Directive 2014/53/EU.

The complete text of the EU declaration of conformity is available from one of the following internet addresses:

- Products, Download from www.miele.ie
- For service, information, operating instructions etc: go to https://miele.co.uk/manuals and enter the name of the product or the serial number

Frequency band of the WiFi module	2.4000 GHz – 2.4835 GHz
Maximum transmitting power of the WiFi module	< 100 mW

UK Conformity declaration

Miele hereby declares that this refrigerator complies with UK Radio Equipment Regulations 2017, as amended.

The complete text of the UK declaration of conformity is available from one of the following internet addresses:

- Products, Download from www.miele.co.uk
- For service, information, operating instructions etc: go to https://miele.co.uk/manuals and enter the name of the product or the serial number

Frequency band of the WiFi module	2.4000 GHz – 2.4835 GHz
Maximum transmitting power of the WiFi module	< 100 mW

This **Statement of Compliance** confirms this Miele product fully complies with the **Product Security and Telecommunications Infrastructure (Security Requirements for Relevant Connectable Products) Regulations 2023.**

1) Household Appliance – *Freezer - 120002, 120003, 320001, 320002*
Refrigerator - 110001, 110002, 310001, 310002, 310003
Fridge-freezer - 130001, 130002, 130003, 130004, 330001, 330002
Wine unit - 210007, 310004, 330004
2) Manufactured by: Miele & Cie KG,
Carl Miele Street 29, 33332 Gutersloh Germany
Imported by and contact point: Miele Company Ltd, Fairacres, Marcham Road, Abingdon, Oxon, OX14 ITW Great Britain
3) The defined support period at the time of first supply is 10 years
4) To report vulnerabilities and cybersecurity issues please contact: psirt@miele.com
5) Signature
Name: **Paul Wright**
Company Position: **Head of Technical Management**
Date of signature: **19th March 2024**
Place of signature: **Abingdon, Oxfordshire**

Copyrights and licences

For the purpose of operating and controlling the communication module, Miele uses proprietary or third-party software that is not covered by open source licensing terms. This software/these software components are protected by copyright. The copyrights held by Miele and third parties must be respected.

Furthermore, the communication module integrated in the appliance contains software components which are distributed under open source licence conditions. The open source components contained in the appliance along with the corresponding copyright notices, copies of the licensing terms valid at the time and any further information can be accessed locally by IP via a web browser (http[s]://<IP address>/Licenses). The liability and warranty arrangements for the open source licences displayed in this location only apply in relation to the respective rights holders.

United Kingdom
Miele Co. Ltd., Fairacres, Marcham Road, Abingdon, Oxon, OX14 1TW
Tel: 0330 160 6600, Internet: www.miele.co.uk, E-mail: info@miele.co.uk

Australia
Miele Australia Pty. Ltd.
ACN 005 635 398
ABN 96 005 635 398
Level 4, 141 Camberwell Road
Hawthorn East, VIC 3123
Tel: 1300 464 353
E-mail: info@miele.com.au
Internet: www.miele.com.au

China Mainland
Miele Electrical Appliances Co., Ltd.
1-3 Floor, No. 82 Shi Men Yi Road
Jing' an District
200040 Shanghai, PRC
Tel: +86 21 6157 3500
Fax: +86 21 6157 3511
E-mail: info@miele.cn
Internet: www.miele.cn

Hong Kong, China
Miele (Hong Kong) Ltd.
41/F - 4101, Manhattan Place
23 Wang Tai Road
Kowloon Bay, Hong Kong
Tel: (852) 2610 1025
Fax: (852) 3579 1404
E-mail:
customerservices@miele.com.hk
Website: www.miele.hk

India
Miele India Pvt. Ltd.
1st Floor, Copia Corporate Suites,
Commercial Plot 9, Mathura Road,
Jasola, New Delhi - 110025
E-mail: customercare@miele.in
Website: www.miele.in

Ireland
Miele Ireland Ltd.
2024 Bianconi Avenue
Citywest Business Campus
Dublin 24
Tel: (01) 461 07 10
Fax: (01) 461 07 97
E-mail: info@miele.ie
Internet: www.miele.ie

Malaysia
Miele Sdn Bhd
Suite 12-2, Level 12
Menara Sapura Kencana
Petroleum
Solaris Dutamas No. 1
Jalan Dutamas 1
50480 Kuala Lumpur, Malaysia
Phone: +603-6209-0288
Fax: +603-6205-3768

New Zealand
Miele New Zealand Limited
IRD 98 463 631
8 College Hill
Freemans Bay, Auckland 1011
Tel: 0800 464 353
E-mail: customercare@miele.co.nz
Internet: www.miele.co.nz

Singapore
Miele Pte. Ltd.
29 Media Circle
#11-04 ALICE@Mediapolis
Singapore 138565
Tel: +65 6735 1191
Fax: +65 6735 1161
E-mail: info@miele.com.sg
Internet: www.miele.sg

South Africa
Miele (Pty) Ltd.
63 Peter Place, Bryanston 2194
P.O. Box 69434, Bryanston 2021
Tel: (011) 875 9000
Fax: (011) 875 9035
E-mail: info@miele.co.za
Internet: www.miele.co.za

Thailand
Miele Appliances Ltd.
BHIRAJ TOWER at EmQuartier
43rd Floor Unit 4301-4303
689 Sukhumvit Road
North Klongton Sub-District
Vadhana District
Bangkok 10110, Thailand

United Arab Emirates
Miele Appliances Ltd.
Showroom 1, Eiffel 1 Building
Sheikh Zayed Road, Umm Al Sheif
P.O. Box 114782 - Dubai
Tel. +971 4 3044 999
Fax. +971 4 3418 852
800-MIELE (64353)
E-mail: info@miele.ae
Website: www.miele.ae

Manufacturer: Miele & Cie. KG, Carl-Miele-Straße 29, 33332 Gütersloh, Germany

Miele

K 7797 ...

en-GB

M.-Nr. 12 583 990 / 02