Miele

Operating instructions
Fridge-freezer

To avoid the risk of accidents or damage to the appliance it is **essential** to read these instructions before it is installed and used for the first time.

en-AE, SA

M.-Nr. 12 124 820

Contents

Warning and Safety instructions 5

Caring for the environment 15

Installation 16
Installation site 16
Side-by-side combinations 17
Climate range 17
Ventilation 18
Furniture door panel 18
Horizontal and vertical gaps 18
Weight of the furniture door 19
Building-in dimensions 20
Installation in a tall unit/side view 20
Connections and ventilation 21
Limiting the opening angle of the appliance doors 22
Electrical connection 23

Saving energy 25

Guide to the appliance 26
Control panel with start display 28
Settings mode ⚙ 28
Selecting the desired function in Settings mode ⚙ 30
Adjusting the interior fittings 31
Moving the door shelf/bottle shelf 31
Clipping the egg trays on 31
Adjusting or removing the bottle holder 31
Moving the adjustable shelves 31
Space for a baking tray 32
Moving the charcoal filters 32
Accessories supplied 33
Optional accessories 33

Switching on and off 35
Before using for the first time 35
Connecting the refrigeration appliance 35
Switching the refrigeration appliance on 35
Switching the refrigeration appliance off 36
Switching off the refrigerator section separately 36
Switching off for longer periods of time 37

The correct temperature 38
Temperature display 39

Setting the temperature in the refrigerator/freezer sections 39
Possible temperature settings 39

Using Super cool, Super freeze and Dynamic cooling 40

Selecting further settings 43
Explanation of the different settings 43
Party mode 43
Holiday mode 43
Switching the lock function / on 44
Changing the time before the door alarm is triggered 45
Miele@home 45
Adjusting the volume of alarms and buzzers / 47
Adjusting the display brightness 48
Switching off demo mode 48
Resetting the settings to their default settings 49
Information 49
Charcoal filter change indicator 49
Cleaning mode 49

Temperature and door alarm 50
Door alarm 51

Storing food in the refrigerator section 52
Different storage zones 52
Food which is not suitable for storage in the refrigerator section 53
Notes on buying food 53
Storing food correctly 54

Storing food in the DailyFresh drawer 55

Freezing and storing food 57
Freezing fresh food 57
Maximum freezing capacity 57
Storing frozen food 57
Home freezing 58
Storage time for frozen food 59
Cooling drinks quickly 60
Using accessories 60
Making ice cubes 60

Defrosting 61

Cleaning and care 62
Cleaning agents 62

Contents

Preparing the refrigeration appliance for cleaning 63
Cleaning the inside of the appliance 64
Cleaning accessories by hand or in the dishwasher 64
Removing and dismantling accessories for cleaning 65
Inserting the glass shelves and drawers into the freezer section 66
Cleaning the door seal 67
Cleaning the ventilation gaps 67
After cleaning 67

Problem solving guide 68

Noises 78

Service 79
Contact in case of malfunction 79
EPREL database 79
Warranty 79

This refrigeration appliance complies with current safety requirements. Inappropriate use can, however, lead to personal injury and material damage.

Please read the operating and installation instructions carefully before using the refrigeration appliance for the first time. They contain important information on safety, installation, use and maintenance. This is to protect yourself from injury, and from damaging your refrigeration appliance.

In accordance with standard IEC 60335-1, Miele expressly and strongly advises that you read and follow all information provided on installing the refrigeration appliance, as well as the safety notes and warnings.

Miele cannot be held liable for injury or damage caused by non-compliance with these instructions.

Keep these operating and installation instructions in a safe place and pass them on to any future owner.

Correct application

▶ This refrigeration appliance is intended for use in the home and in similar environments, for example
– in shops, offices and similar work settings
– by the guests in hotels, motels, bed & breakfasts and other typical home settings.
This refrigeration appliance is not intended for outdoor use.

▶ This appliance is intended for domestic use only for cooling and storing food and drink as well as for storing deep frozen food, freezing fresh food and for making ice.
Any other usage is not supported by the manufacturer and could be dangerous.

▶ This refrigeration appliance is not suitable for storing and keeping cool medicines, blood plasma, laboratory preparations or similar substances or products that are subject to the Medical Device Directive. Incorrect use of the refrigeration appliance for such purposes may cause deterioration of the items stored. The refrigeration appliance is also not suitable for use in areas where there is a risk of explosion.
Miele cannot be held liable for damage caused by improper or incorrect use or operation of the appliance.

▶ The appliance can only be used by people with reduced physical, sensory or mental capabilities, or lack of experience and knowledge, if they are supervised whilst using it, or have been shown how to use it in a safe way and recognise and understand the consequences of incorrect operation.

Safety with children

▶ Children under 8 years of age must be kept away from the refrigeration appliance unless they are constantly supervised.

▶ Children 8 years and older may only use the appliance unsupervised if they have been shown how to use it in a safe way and recognise and understand the consequences of incorrect operation.

▶ Children must not be allowed to clean or maintain the appliance unsupervised.

▶ Please supervise children in the vicinity of the appliance and do not let them play with it.

▶ Danger of suffocation! Whilst playing, children could become entangled in packaging (such as plastic wrapping) or pull it over their head and suffocate. Keep packaging material away from children.

Technical safety

▶ The coolant circuit has been checked for leaks. The refrigeration appliance complies with statutory safety requirements and the appropriate EU directives.

▶ This refrigeration appliance contains the coolant Isobutane (R600a), a natural gas which is environmentally friendly. The coolant does not damage the ozone layer and does not contribute to the greenhouse effect.
The use of this coolant has, however, led to a slight increase in the noise level of the appliance. In addition to the noise of the compressor, you might be able to hear the coolant flowing around the cooling circuit. Unfortunately, this cannot be avoided, but it does not affect the performance of the refrigeration appliance.
When transporting and installing the refrigeration appliance, ensure that no parts of the cooling circuit are damaged. Splashes of coolant can damage the eyes.
In the event of damage:

- Avoid naked flames or anything which creates a spark.
- Disconnect the refrigeration appliance from the mains electricity supply.
- Ventilate the room where the refrigeration appliance is located for several minutes.
- Contact your Miele Dealer.

▶ The more coolant there is in a refrigeration appliance, the larger the room it should be installed in. In the event of a leakage, if the appliance is in a small room, there is the danger of a combustible gas/air mixture building up. For every 8 g of coolant at least 1 m^3 of room space is required. The amount of coolant in the refrigeration appliance is stated on the data plate inside the appliance.

▶ To avoid the risk of damage to the appliance, make sure that the connection data (fuse rating, frequency and voltage) on the data plate corresponds to the household supply.
Check that this is the case before connecting the appliance. Consult a qualified electrician if in any doubt.

▶ The electrical safety of this appliance can only be guaranteed when correctly earthed. It is essential that this standard safety requirement is met. If in any doubt please have the electrical installation tested by a qualified electrician.

▶ Temporary or permanent operation on an autonomous power supply system or a power supply system that is not synchronised with the mains power supply (e.g. island networks, back-up systems) is possible. A prerequisite for operation is that the power supply system complies with the specifications of EN 50160 or an equivalent standard.
The function and operation of the protective measures provided in the domestic electrical installation and in this Miele product must also be maintained in isolated operation or in operation that is not synchronised with the mains power supply, or these measures must be replaced by equivalent measures in the installation. As described, for example, in the current version of BS OHSAS 18001–2 ISO 45001.

▶ If the electrical connection cable supplied is damaged, it must only be replaced by an original spare part to prevent a hazard for the user. Miele can only guarantee the safety of the appliance when original Miele spare parts are used.

▶ Do not connect the appliance to the mains electrical supply by a multi-socket adapter or extension lead. These are a fire hazard and do not guarantee the required safety of the appliance.

▶ If moisture gets into electrical components or into the mains connection cable, it could cause a short circuit. Therefore, do not operate this refrigeration appliance in areas which are exposed to moisture (e.g in a garage or utility room).

▶ This appliance must not be used in a non-stationary location (e.g. on a ship).

▶ Do not use a damaged appliance. It could be dangerous. Check the appliance for visible signs of damage.

▶ WARNING. For safety reasons, this appliance may only be used after it has been built in in accordance with the instructions.

▶ The appliance must be isolated from the electricity supply during installation, maintenance and repair work.

▶ While the appliance is under warranty, repairs should only be undertaken by a Miele authorised technician. Otherwise the warranty is invalidated.

▶ Faulty components must only be replaced with genuine Miele original spare parts. Miele can only guarantee the safety standards of the appliance when Miele replacement parts are used.

▶ This refrigeration appliance is supplied with a special lamp to cope with particular conditions (e.g. temperature, moisture, chemical resistance, abrasion resistance and vibration). This lamp must only be used for the purpose for which it is intended. The lamp is not suitable for room lighting. Replacement lamps may only be fitted by your Miele Dealer. This refrigeration appliance contains several light sources with at least energy efficiency class F.

Proper installation

▶ When installing the refrigeration appliance, it is a mandatory requirement to follow the installation instructions supplied with it.

▶ Two people are required to install the refrigeration appliance.

▶ Change the door hinging (if necessary) as described in the installation instructions supplied with the appliance.

▶ Only install the refrigeration appliance in a solid, rectangular and level housing unit, positioned on an even and level floor.

Correct use

▶ This refrigeration appliance is designed for use within specific ambient temperatures (climate range). Do not use in ambient temperatures for which it is not designed. The climate range is stated on the data plate in the interior cabinet of the refrigeration appliance. A lower ambient temperature will cause the compressor to switch off for longer periods, meaning that the refrigeration appliance is unable to maintain the required temperature.

▶ Do not cover or block the air vents as this could impair the efficiency of the appliance, increase the electricity consumption and could cause damage to the components.

▶ If storing food which contains a lot of fat or oil in the appliance or the door, make sure that it does not come into contact with plastic components as this could cause stress cracks or break the plastic.

▶ Risk of fire and explosion. Do not store explosive materials in the refrigeration appliance or any products containing propellants (e.g. spray cans). Electrical components can cause flammable mixes of gases to ignite.

▶ WARNING! Danger of explosion. Do not operate any electrical equipment (e.g. an electric ice-cream maker) inside the refrigeration appliance. Danger of sparking and explosion.

▶ Danger of injury and damage to the appliance. Do not store cans or bottles containing carbonated drinks or liquids which could freeze in the freezer zone. Otherwise they could burst.

▶ Danger of injury and damage to the appliance. When cooling drinks quickly in the freezer zone, make sure bottles are not left in for more than one hour. Otherwise they could burst.

▶ Danger of injury. Never handle frozen food or the metal parts of the appliance with wet hands. Your hands may freeze to the frozen food or to the metal.

▶ Danger of injury. Do not take ice cubes out with your bare hands and never place ice cubes or ice lollies in your mouth straight from the freezer zone. The very low temperature of the frozen food can cause frost burn to the lips and tongue.

▶ Do not refreeze partially or fully defrosted food. Consume defrosted food as soon as possible, as it will lose its nutritional value and spoil if left for too long. Defrosted food may only be re-frozen after it has been cooked.

▶ Observe the manufacturer's “use-by” dates and storage instructions given on food to avoid the risk of food poisoning. Storage times will depend on several factors, including the freshness and quality of the food, as well as the temperature at which it is stored.

Accessories and spare parts

▶ Only use original Miele accessories. If other parts are used, warranty, performance and product liability claims will be invalidated.

▶ Miele will guarantee to supply functional spare parts for a minimum of 10 years and up to 15 years following the discontinuation of your refrigeration appliance.

Cleaning and care

▶ Do not use any oils or grease on the door seals, as these will cause the seals to deteriorate and become porous with time.

▶ WARNING! DANGER of injury and damage! Do not use any mechanical or other types of aids which are not recommended by the manufacturer to accelerate the defrosting process.

▶ Do not use a steam cleaning appliance to clean or defrost this appliance.
Steam could reach electrical components and cause a short circuit.

▶ Sharp edged or pointed objects will damage the evaporator, causing irreversible damage to the appliance. Do not use sharp edged or pointed objects to

- remove frost and ice,
- separate frozen food or remove ice trays.

▶ Do not place electric heaters or candles in the appliance to defrost it. These can damage the plastic parts.

▶ Do not use defrosting sprays or de-icers, as they could contain substances which could damage the plastic parts or which might cause the build-up of gases and pose a danger to health.

Transport

▶ Always transport the appliance in an upright position and in its original transport packaging to avoid damage in transit.

▶ Danger of injury and damage to the appliance. The refrigeration appliance is very heavy and must be transported by two people.

Disposal of your old appliance

▶ Children playing could become trapped in the appliance and could suffocate.

- Remove the appliance doors.
- Remove the drawers.
- Leave the adjustable shelves in the refrigeration appliance so children cannot climb inside.
- If your old refrigeration appliance has a door lock, destroy it. This will prevent the risk of children playing accidentally locking themselves in and endangering their lives.

▶ Risk of electric shock!

- Cut the power plug off the mains connection cable.
- Cut the mains connection cable off the old appliance.

▶ Dispose of everything separately from the old appliance.

▶ During and after disposal, make sure that the refrigeration appliance is not placed near petrol or other flammable gases and liquids.

▶ Risk of fire due to escaping oil or refrigerant!
The refrigerant and oil inside the appliance are flammable. In high enough concentrations, escaping refrigerant or oil may ignite if they come into contact with an external heat source.
During disposal, make sure that the cooling circuit is not damaged in order to prevent refrigerant and oil escaping in an uncontrolled manner (see the data plate for details of the refrigerant).

▶ Splashes of coolant can damage the eyes. Be careful not to damage any part of the pipework whilst awaiting disposal, e.g. by

- puncturing the coolant channels in the condenser,
- bending any pipework, or
- scratching the surface coating.

Symbol on the compressor (depending on model)

This information is only relevant for recycling. There is no risk during normal operation.

▶ The oil in the compressor can be fatal if swallowed or if it penetrates the airways.

Disposal of the packing material

The packaging is designed to protect the appliance from damage during transportation. The packaging materials used are selected from materials which are environmentally friendly for disposal and should be recycled.

Recycling the packaging reduces the use of raw materials in the manufacturing process and also reduces the amount of waste in landfill sites.

Disposing of your old appliance

Electrical and electronic appliances contain many valuable materials. They also contain certain materials, compounds and components which were essential for their correct functioning and safety. These could be hazardous to human health and to the environment if disposed of with household waste or if handled incorrectly. Please do not, therefore, dispose of your old appliance with household waste.

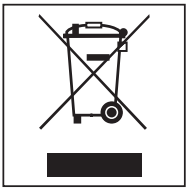

Instead, please make use of officially designated collection and disposal points to dispose of and recycle electrical and electronic appliances in your local community, with your Miele dealer. By law, you are solely responsible for deleting any personal data from the old appliance prior to disposal.

Take care not to damage your refrigeration appliance's pipework before or during transportation to an authorised collection depot.
This is to ensure that refrigerant in the cooling circuit and oil in the compressor is contained, and will not leak into the environment.

Ensure that your old appliance presents no danger to children while being stored for disposal. For further information, see "Warning and safety instructions" in these operating instructions.

Installation site

⚠ Risk of damage and danger of injury due to the refrigeration appliance tipping over.

This refrigeration appliance is very heavy and can tip forwards when the appliance door is open.

Keep the appliance door(s) closed until the refrigeration appliance has been built in.

WARNING. The refrigeration appliance must be secured in its building-in niche in accordance with the operating and installation instructions.

⚠ Fire risk and risk of damage from appliances which give off heat.

Appliances which give off heat can catch fire and set fire to the refrigeration appliance.

This refrigeration appliance must not be installed underneath a hob.

⚠ Fire risk and danger of damage from open flames.

Open flames can set fire to the refrigeration appliance.

Keep open flames (e.g. a candle) away from the refrigeration appliance.

This appliance should be installed in a dry, well-ventilated room.

When deciding on the installation site, please bear in mind that your refrigeration appliance will use more energy if installed near to a heater, a cooker or other appliance that gives off heat. Avoid direct sunlight.
The higher the ambient temperature, the longer the compressor runs and the higher the energy consumption is.

When installing the refrigeration appliance, please note the following:

- The socket must be easily accessible in an emergency, not concealed behind the appliance.
- The plug and mains connection cable must not touch the rear of the refrigeration appliance as they could be damaged by vibrations from the appliance.
- Do not plug in other appliances behind the refrigeration appliance.
- WARNING: When positioning the appliance, ensure the mains connection cable is not trapped or damaged.
- Do not position or operate multi-socket adapters, distributor strips or other electronic devices (such as halogen transformers) at the rear of the appliance.

⚠ Risk of damage due to high humidity.

In environments with high humidity, condensation can build up on external refrigeration appliance panels.
This condensate can cause corrosion on external appliance panels.

Install the refrigeration appliance in a dry and/or air-conditioned room with sufficient ventilation.

After installation please make sure that the appliance door(s) closes (close) properly and the refrigeration appliance is installed in accordance with these installation instructions. It is essential to comply with the specified ventilation cutout requirements.

Side-by-side combinations

⚠ Risk of damage due to condensation on external appliance panels.

In environments with high humidity, condensation can build up on external appliance panels, which can cause corrosion.

Do not place different refrigeration appliance models directly next to or on top of one other.

If the model number for your refrigeration appliance does have the letter "**S**" in it, it can be installed "side-by-side". Your refrigeration appliance is equipped with built-in heating units in the side panels.

If the model number for your refrigeration appliance **does not** have the letter "**S**" in it, it cannot be installed "side-by-side". Your refrigeration appliance must not be installed "side-by-side" because it is not equipped with built-in heating units in the side panels.

Exception: your refrigeration appliance can be installed next to another refrigeration appliance with an integrated heating unit if each appliance is built into a separate niche. Please contact your dealer for specific information about which combinations will work with your refrigeration appliance.

Climate range

This refrigeration appliance is designed for use within specific ambient temperatures (climate range). Do not use in ambient temperatures for which it is not designed. The climate range is stated on the data plate in the interior cabinet of the refrigeration appliance.

Climate range	Ambient temperature
SN	+10 to +32 °C
N	+16 to +32 °C
ST	+16 to +38 °C
T	+16 to +43 °C

A lower ambient temperature leads to the compressor switching off for longer periods. This can cause the internal temperature in the refrigeration appliance to rise with the risk of food deteriorating and going off.

Ventilation

⚠ Risk of fire and damage due to insufficient ventilation.

If the refrigeration appliance is not ventilated sufficiently, the compressor will run more frequently and for longer periods. This will result in increased energy consumption and a higher operating temperature for the compressor. This may, in turn, cause damage to the compressor.

Please ensure that there is adequate ventilation around the refrigeration appliance.

It is essential to observe the required ventilation gaps.

The ventilation gaps must not be covered or blocked in any way.

They must also be regularly dusted.

Air at the back of the refrigeration appliance gets warm. The appliance housing unit must therefore be constructed to allow sufficient space for ventilation (see “Installation dimensions” and the installation instructions provided).

Furniture door panel

Horizontal and vertical gaps

Depending on the style of kitchen furniture, the thickness and edge radius of the furniture door panel and the gap that runs around the door, vertically and horizontally, are specified.

It is essential to pay attention to the following:

- **Horizontal gap**

The gap between the furniture door panel and the housing unit door above or below it must be at least 3 mm.

- **Vertical gap**

If the gap between the refrigeration appliance furniture door panel and the adjoining housing unit door or wall on the hinged side is too small, the appliance door could collide with the adjoining housing unit door or wall when opened.

It may be necessary to adjust the size of this gap to suit the thickness and edge radius of the appliance furniture door.

This must be taken into consideration when planning your kitchen and when replacing an old refrigeration appliance with a new one to ensure the installation conditions required are met.

Appliance furniture door thickness **A** [mm]	Gap **X** [mm] for different edge radii**B**			
	R0	R1.2	R2	R3
≥16–19	min. 3			
20	5	4	4	3.5
21	5.5	5	4.5	4
22	6.5	6	5.5	5

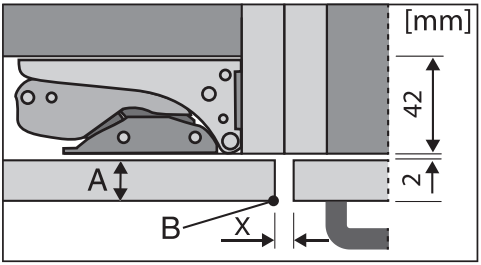

Adjoining kitchen furniture front

A = Furniture front thickness
B = Edge radius
X = Gap

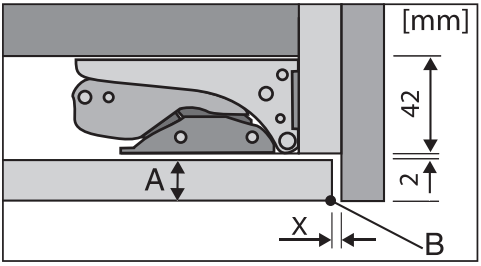

Adjoining side wall

A = Furniture front thickness
B = Edge radius
X = Gap

Tip: Fit a spacer between the housing unit carcase and the side wall. This way you will get a sufficiently wide gap.

Weight of the furniture door

⚠ If the furniture door panel is too heavy, this can cause damage.
Fitting a furniture door panel which is heavier than the maximum permitted weight could damage the hinges. This can cause subsequent functional problems.

The maximum permissible weights of the furniture doors in kg are:

Refrigeration appliance	Upper furniture door panel	Lower furniture door panel
KFNS 7734 D	18	12

Building-in dimensions

Installation in a tall unit/side view

All dimensions are given in mm.

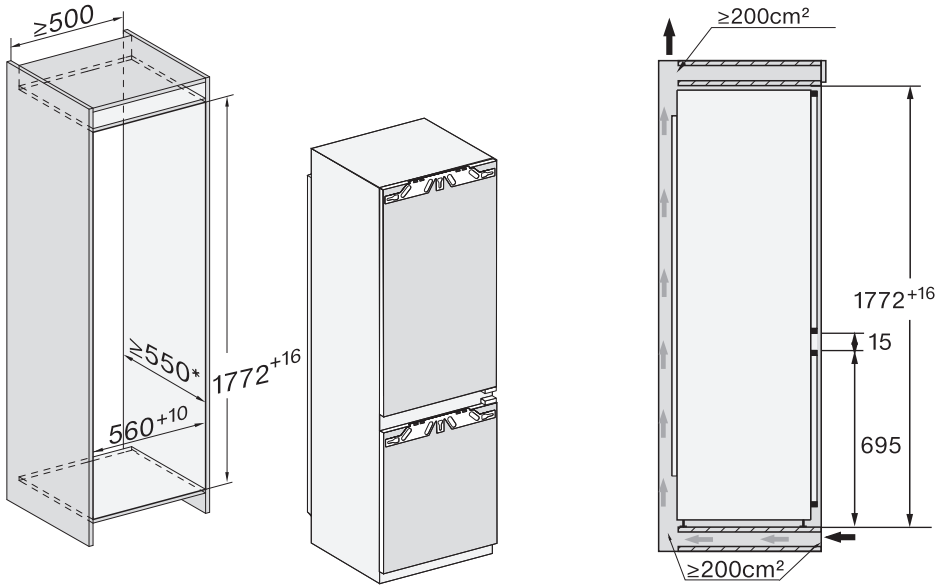

* The declared energy consumption was calculated in a 560 mm deep niche. The refrigeration appliance is fully functional in a 550 mm niche but the energy consumption will be slightly higher.

Before installation, ensure the housing unit dimensions are the correct size.

Connections and ventilation

All dimensions are given in mm.

The specified ventilation cross-sections must be adhered to in order to ensure the correct functioning of the refrigeration appliance.

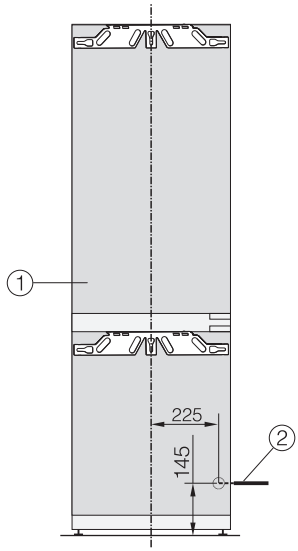

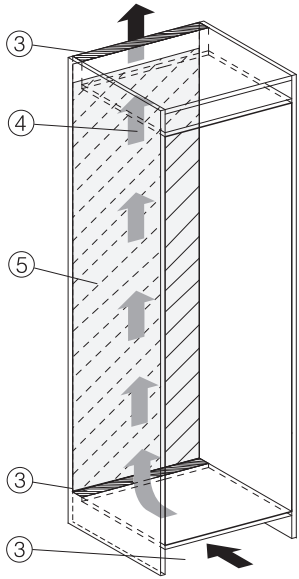

① View from the front

② Mains connection cable, length = 2200 mm
A longer mains connection cable is available to order from your Miele Dealer.

③ Ventilation cross-section min. 200 cm^2

④ Ventilation

⑤ No connection sockets in this area

Limiting the opening angle of the appliance doors

The door hinges are set to enable the appliance doors to be opened wide.

If the opening angle of the doors needs to be limited to approx. 90°, the hinge can be adjusted to accommodate this.

The locking pins for limiting the door opening must be fitted before the refrigeration appliance is installed.

The refrigerator section door must be taken off in order to insert the pins into the upper hinge of the freezer section door (see the installation instructions provided).

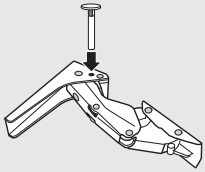

- Insert the locking pins supplied for limiting the door opening into the hinges from above.

This will limit the opening angles of the appliance doors to approx. 90°.

Electrical connection

The refrigeration appliance must only be connected to an earthed socket using the mains connection cable supplied.

The socket must be easily accessible after the refrigeration appliance has been installed. If the socket is not easily accessible, ensure that a suitable means of disconnection is provided on the installation side for each pole.

⚠ Risk of fire from overheating.
Connecting the refrigeration appliance to a multi-socket plug adapter or to an extension lead can overload the cable.
For safety reasons, do not use an extension lead or multi-socket adapter.

The electrical installation must comply with VDE 0100 requirements.

For safety reasons, we recommend using a type residual current device (RCD) in the assigned electrical installation for connecting the refrigeration appliance.

If the mains connection cable is damaged, it must only be replaced with a specific mains connection cable of the same type (available from your Miele Dealer). For safety reasons, such replacement may only be carried out by a qualified specialist or your Miele Dealer.

These operating instructions and the data plate indicate the nominal power consumption and the appropriate fuse rating. Compare this information with the data of the on-site electrical connection. If in any doubt, consult a qualified electrician.

Temporary or permanent operation on an autonomous power supply system or a power supply system that is not synchronised with the mains power supply (e.g. island networks, back-up systems) is possible. A prerequisite for operation is that the power supply system complies with the specifications of EN 50160 or an equivalent standard. The function and operation of the protective measures provided in the domestic electrical installation and in this Miele product must also be maintained in isolated operation or in operation that is not synchronised with the mains power supply, or these measures must be replaced by equivalent measures in the installation. As described, for example, in the current version of VDE-AR-E 2510-2.

Connecting the refrigeration appliance

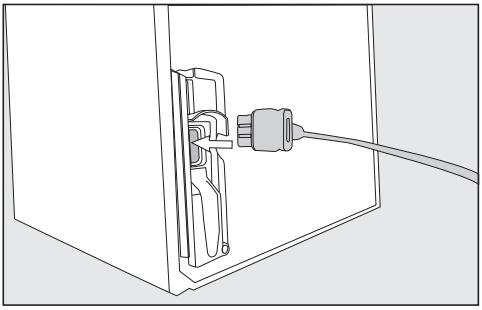

- Insert the plug connector into the socket at the back of the refrigeration appliance.

Make sure that the plug connector has clicked into position correctly.

- Insert the plug of the refrigeration appliance into the socket.

The refrigeration appliance is now connected to the electricity supply.

How to save energy:

Installation site

The refrigeration appliance has to cool more often at higher ambient temperatures and consumes more energy in the process. Therefore, you should:

- Install the refrigeration appliance in a well-ventilated room.
- Do not install the refrigeration appliance near to a heat source (heater element, cooker).
- Protect the refrigeration appliance from direct sunlight.
- Ensure an ideal ambient temperature of 20 °C.
- Clean the ventilation gaps on a regular basis to remove any dust.

Temperature setting

The colder the temperature, the higher the energy consumption. The following settings are recommended:

- 4 to 5 °C in the refrigerator section.
- -18 °C in the freezer section.

Use

Energy consumption is increased by heat input and impeded air circulation. Therefore, you should:

- Only open the appliance door(s) when necessary and for as short a time as possible. Arrange the food in such a way that makes it easy to find in the appliance.
- Always close the appliance door(s) properly after opening them.
- Allow hot food and drinks to cool down before placing them in the refrigeration appliance.
- Store food well packaged or covered.
- Do not overfill the compartments to allow air to circulate.
- Place frozen food in the fridge zone to defrost.
- Keep drawers and shelves arranged as they were when the appliance was delivered.

Guide to the appliance

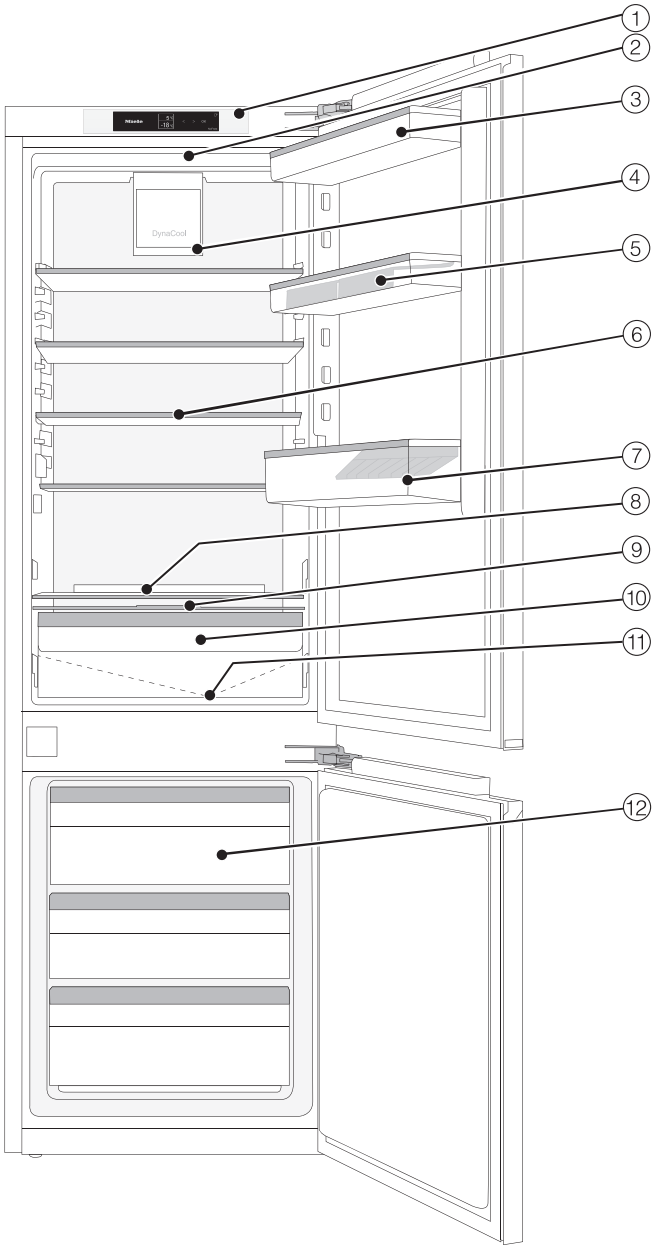

① Display
② Interior lighting
③ Shelves in the appliance door
④ Fan
⑤ Egg tray
⑥ Adjustable shelf
⑦ Bottle shelf with bottle holder
⑧ Space for a baking tray (ComfortSize)
⑨ Compartment lid for setting the humidity level in the DailyFresh drawer
⑩ DailyFresh drawer for fruit and vegetables (humidity-controlled)
⑪ Condensate channel and drain hole
⑫ Freezer drawers

Control panel with start display

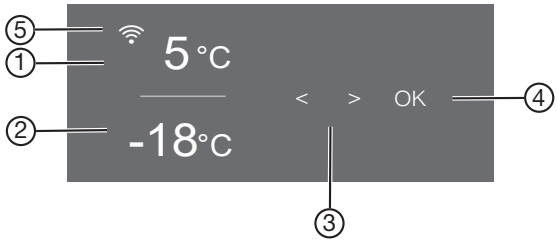

① Temperature display for fridge zone

② Temperature display for freezer section

③ Sensor controls for selecting a setting

④ *OK* sensor control for confirming a selection

⑤ Display for Miele@home connection status
(only visible when the Miele@home function has been set up)

Settings mode ⚙

In Settings mode, you can select the following appliance functions and alter their settings to some extent:

Symbol	Function	Factory default
	Switch the Party mode function on or off (see “Selecting further settings”)	Off
	Switch the Holiday mode function on or off (see “Selecting further settings”)	Off
/	Switch the system lock on or off (see “Selecting further settings”)	(off)
	Switching the refrigeration appliance off (see “Switching on and off”)	
	Change the time before the door alarm is triggered (see “Selecting further settings”)	1:00

@	Set up the Miele@home function for the first time, activate and deactivate WiFi or reset the network configuration (see “Selecting further settings”)	App
/	Switch the keypad tone on or off	On
/	Change the volume of the alarms and buzzers or switch them off entirely (see “Selecting further settings”)	On /level 5
☼	Change the display brightness (see “Selecting further settings”)	Level 4
°C / °F	Change the temperature unit (°Celsius or °Fahrenheit)	°C
	Switch the Demo mode function off (only visible when switched on) (see “Selecting further settings”)	Off
	Reset to default settings (see “Selecting further settings”)	—
i	Call up information (model designation and serial number) about your refrigeration appliance (see “Selecting further settings”)	—
	Switch on the reminder to change the charcoal filter (see “Optional accessories”) (see “Selecting further settings”)	Off
	Switch Cleaning mode on or off (see “Cleaning and care”)	Off

Selecting the desired function in Settings mode ⚙

- Touch the *OK* sensor control on the control panel.

will appear in the display (refrigerator section is selected).

- Use the < or > sensor control to scroll to the ⚙ symbol.
- Touch *OK*.
- Select the function you want using the < or > sensor control.
- Touch *OK* to select the function you want.

When the function is **switched on**, a dot appears in the upper corner of the display •.

- Touch *OK* to deselect a selected function.

When the function is **switched off**, the dot in the upper corner of the display goes out.

Exiting Settings mode ⚙

- Use the < or > sensor control to scroll to the ⮌ symbol.
- Touch *OK*.
- Use the < or > sensor control to scroll to the ⮌ symbol and touch *OK*.
- **Alternatively**:
  Wait approx. 15 seconds after the last press of a button.
  Settings mode is then exited automatically.

Adjusting the interior fittings

Moving the door shelf/bottle shelf

Only move the door/bottle shelves in the appliance door when they are empty.

- Push the door/bottle shelves upwards, then remove them by pulling them forwards.
- Replace the door/bottle shelves at the required height.

Clipping the egg trays on

- Clip the egg trays onto the rear edge of the door shelf.

Adjusting or removing the bottle holder

The non-slip fins of the bottle holder make bottles more secure when you open and close the appliance door.

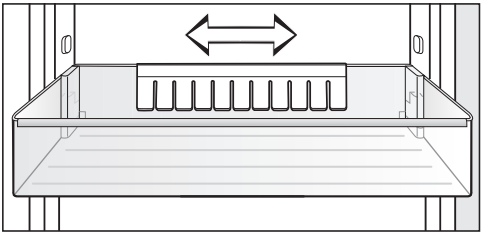

The bottle holder can be moved to the left or right to create more room for drink cartons.

The bottle holder can be removed completely, e.g. for cleaning:

- pull the bottle holder up to remove it.

Moving the adjustable shelves

The shelves can be adjusted according to the height of the food.

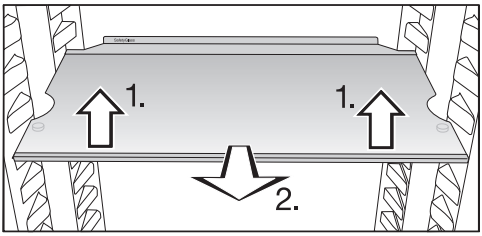

- Raise the shelf slightly at the front and pull it forwards a little.
- Lift it until the notches at the side are in line with the shelf supports. The shelf can then be raised or lowered to the required level.
- Push the shelf in.

Stoppers prevent the shelves from being dislodged by mistake.

The raised edge on the protective strip at the back must face upwards to prevent food from touching the back of the appliance and freezing to it.

Space for a baking tray

A baking tray can be placed above the drawers. The baking tray can be no more than 466 mm wide, 386 mm deep and 50 mm high.

- Open the appliance door as far as it will go.
- Place the baking tray on the dividing plate.

Tip: Let the baking tray cool down to room temperature before putting it in the refrigerator section.

Moving the charcoal filters

KKF-FS charcoal filters with holder (Active AirClean) are available as optional accessories (see “Optional accessories”).

When storing very strong smelling food (e.g. very ripe cheese):

- Place the holder with the charcoal filters on the shelf where this food is kept.
- Change the filters sooner if necessary.
- Use more charcoal filters (with holders) in the appliance (see “Optional accessories”).

The holder for the charcoal filters sits on a protective strip at the back of the shelf.

- To move the charcoal filter, pull the holder upwards to remove it from the protective strip.
- Then pull the protective strip off the shelf.
- Refit it on the shelf you wish to use it on.

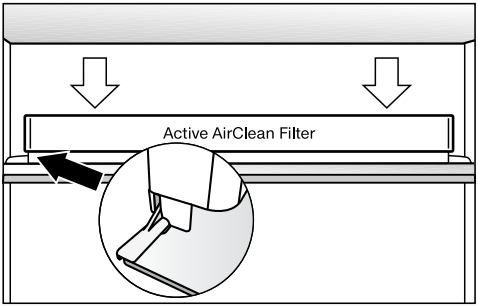

- Refit the holder on the protective strip.

Accessories supplied

Egg tray

Bottle holder

Ice cube tray

Optional accessories

A range of useful Miele accessories and care products are available for your appliance.

Multi-purpose microfibre cloth

The microfibre cloth is suitable for removing fingerprints and light soiling from surfaces such as stainless steel, glass, plastic and chrome without the use of chemicals.

MicroCloth Kit

The MicroCloth Kit contains a universal cloth, a glass cloth and a polishing cloth.
These cloths are extremely resistant to tearing and very robust. Thanks to very fine microfibres these cloths achieve an excellent cleaning performance.

MicroCloth HyClean

The MicroCloth HyClean is a multi-purpose antibacterial cloth and is particularly tear resistant and durable. It can be used wet or dry, with or without cleaning agent.

KKF-FS charcoal filter with holder (Active AirClean)

Charcoal filters neutralise unpleasant odours in the refrigerator section for improved air quality.

KKF-RF replacement filters (Active AirClean)

Replacement filters to the fit the holder are available. We recommend replacing the charcoal filters every 6 months.

Bottle rack

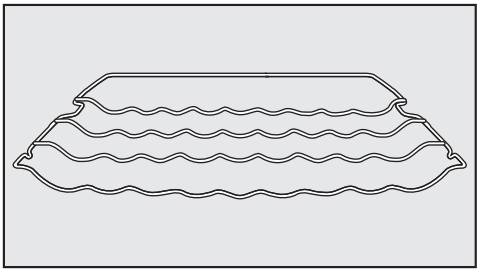

Bottles can be stored horizontally using the bottle rack to save space.
The bottle rack can be placed at different positions in the appliance.

Adjustable shelf with pivotable glass shelf (FlexiTray)

The pivotable glass shelf can be turned 180° clockwise, improving access to the food placed at the back.

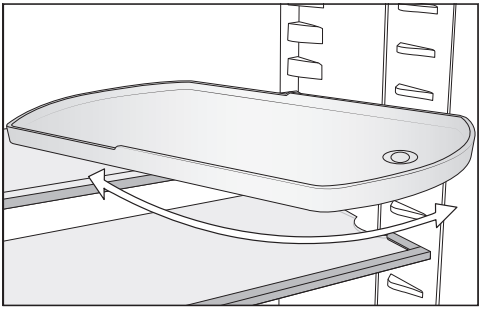

Organisation box

The organisation box makes it easier to sort the food in the fridge zone drawer in a clear manner.

Depending on the model, you may need to remove the entire drawer to insert and remove the organisation box.

SoftClose hinges

The SoftClose hinges ensure that your appliance doors close very softly and quietly.

Furthermore, they close the appliance door automatically if the angle of the open door is less than 30°.

Accessories are available to order from your Miele dealer.

Before using for the first time

- Remove all packaging material and protective film.
- Clean the inside of the appliance and the accessories (see “Cleaning and care”).

Connecting the refrigeration appliance

- Connect the refrigeration appliance to the electricity supply as described in “Electrical connection”.

Miele will then appear on the appliance display, followed by ⏻.

Switching the refrigeration appliance on

- Open the appliance door.
- Touch the *OK* sensor control on the control panel.

The refrigeration appliance will start to cool and the interior lighting will come on when the appliance door is opened.

When the set freezer temperature is reached, the 🌡⚠ symbol disappears, the temperature display of the freezer section lights up constantly and the alarm stops.

- If the alarm annoys you, tap *OK*.

The alarm will stop.

The appliance will gradually reach the pre-set temperatures.

To enable the temperature to get sufficiently cold inside the refrigeration appliance, allow the appliance to run for a few hours before placing food in it. Do not place food in the refrigeration appliance until it has reached the preset temperature.

Do not place food in the freezer zone until it has reached the preset temperature (min. -18 °C).

Switching the refrigeration appliance off

You can only switch the entire refrigeration appliance off in Settings mode ⚙.

- Touch the *OK* sensor control on the control panel.

will appear in the display (refrigerator section is selected).

- Use the < or > sensor control to scroll to the ⚙ symbol.
- Touch *OK*.
- Use the < or > sensor control to scroll to the ⏻ symbol.
- Touch *OK*.

The cooling and interior lighting are switched off.

⏻ will appear in the display.

Please note: the refrigeration appliance is not disconnected from the power supply when it is switched off.

Switching off the refrigerator section separately

The refrigerator section can be switched off without having to switch off the freezer section. This is useful, e.g. whilst on holiday.

- Touch the *OK* sensor control on the control panel.

will appear in the display (refrigerator section is selected).

- Touch *OK*.
- Use the < sensor control to scroll to the ⏻ symbol.
- Touch *OK*.

The temperature display for the refrigerator section will go out. ⏻ will appear in the display.

The refrigerator section is switched off.

The temperature display for the freezer section remains lit up.

Switching the refrigerator section back on again separately

- Touch *OK*.

will appear in the display (refrigerator section is selected).

- Touch *OK*.
- Use the > sensor control to scroll to the temperature you want and touch *OK*.

The refrigerator section switches back on.

Switching off for longer periods of time

If, during a long absence, the refrigeration appliance is switched off but not cleaned and the door is left shut, there is a danger of mould building up inside the appliance.
It is essential to clean the refrigeration appliance.

If the refrigeration appliance is not going to be used for a longer period of time, observe the following:

- Switch the refrigeration appliance off.
- Switch off at the wall and disconnect the plug from the socket, or disconnect the fuse.
- Clean the refrigeration appliance and leave the door ajar to air the appliance and avoid odours building up inside.

It is also advisable to carry out the last two instructions if you are switching the refrigerator section off for a longer period of time.

The correct temperature

It is very important to set the correct temperature to ensure the shelf life of food. Reducing the temperature reduces the growth rate of microorganisms. Food does not spoil as quickly.

The temperature in the refrigeration appliance will rise:

- The more often the appliance door is opened and the longer it is kept open
- The more food that is stored in it
- The warmer the food is which is being put into it
- The higher the ambient temperature surrounding the refrigeration appliance. This refrigeration appliance is designed for use within specific ambient temperatures (climate range). Do not use in ambient temperatures for which it is not designed.

... in the refrigerator section

We recommend a temperature of **4 °C** in the refrigerator section.

... in the freezer zone

To freeze fresh food, a temperature of **-18 °C** is required. This will prolong the storage life of your food and retain its quality.

Temperature display

In normal operation, the temperature display shows the **current average refrigerator section temperature** and the **maximum freezer section temperature**.

Depending on the ambient temperature and the temperature setting, it can take the appliance a few hours to reach the temperature required and for this temperature to then be shown as a constant temperature on the display.

Setting the temperature in the refrigerator/freezer sections

- Touch the *OK* sensor control on the control panel.

will appear in the display (refrigerator section is selected).

- Use the < and > sensor controls to change the selected temperature zone if required.
- Touch *OK*.
- Use the < and > sensor controls to change the temperature.
- Touch *OK*.

The temperature display will then change back to the current temperature in the relevant temperature zone.

Possible temperature settings

- Refrigerator section: 2 to 9 °C
- Freezer section: -15 to -26 °C

If you change the temperature setting:

- check the temperature display after a few hours. It will take this long for the appliance to give an accurate reading.

- Wait for approx. 6 hours if the refrigeration appliance is not very full
- Wait for approx. 24 hours if the refrigeration appliance is full

If, after this time, the temperature is still too high or too low:

- Adjust the temperature again.

SuperCool ❄

When switched on, the SuperCool function ❄ can be used to rapidly reduce the temperature in the **fridge zone** to its lowest setting (depending on the ambient temperature). The refrigeration appliance will work at full power and lower the temperature. Select this function for the rapid chilling of large amounts of fresh food or drink.

When the SuperCool function ❄ is switched on, the appliance may make more noise than usual.

The SuperCool function ❄ should be switched on **4 hours before** placing food or drinks in the fridge zone.

The SuperCool function ❄ will switch itself off automatically after approx. 12 hours. The refrigeration appliance will then run at normal power again.

Tip: To save energy, you can switch the SuperCool function ❄ off yourself once food and drinks are sufficiently chilled.

Switching SuperCool ❄ on and off

- Touch the *OK* sensor control on the control panel.

will appear in the display (refrigerator section is selected).

- Touch *OK*.
- Use the < sensor control to scroll to the ❄ symbol.
- Touch *OK*.

When the SuperCool function ❄ is **switched on**, a dot appears in the upper corner of the display •.

- Use the > sensor control to scroll to the temperature you want and touch *OK*.

SuperFreeze ❄

When switched on, the SuperFreeze function ❄ can be used to rapidly reduce the temperature in the **freezer section** to its lowest setting (depending on the ambient temperature). The refrigeration appliance will work at full power and lower the temperature. Select this function before freezing fresh food. This helps food to freeze quickly and retain its nutrients, vitamins, flavours and appearance.

When the SuperFreeze function ❄ is switched on, the appliance may make more noise than usual.

SuperFreeze should be switched on approx. **6 hours before** placing food in the freezer section.
When freezing the **maximum amount of food**, the SuperFreeze function ❄ should be switched on **24 hours beforehand**.

The SuperFreeze function ❄ will switch itself off automatically after a maximum of 72 hours. The refrigeration appliance will then run at normal power again. The quantity of fresh food placed in the freezer will determine the duration before it switches off.

Tip: To save energy, you can switch the SuperFreeze function off yourself once food and drinks are sufficiently chilled.

You do not need to switch on the SuperFreeze function:

- If you are placing food that is already frozen in the freezer
- If you only freeze up to 2 kg of fresh food daily

Switching SuperFreeze ❄ on and off

■ Touch the *OK* sensor control on the control panel.

▮ will appear in the display (refrigerator section is selected).

■ Use the > sensor control to scroll to the ▮ symbol.

■ Touch *OK*.

■ Use the < sensor control to scroll to the ❄ symbol.

■ Touch *OK*.

When the SuperFreeze function ❄ is **switched on**, a dot appears in the upper right-hand corner of the display •.

■ Use the < and > sensor controls to scroll to the temperature you want and touch *OK*.

DynaCool

When the DynaCool function is not switched on, the natural circulation of air in the appliance will cause different temperature zones in the fridge zone, as the cold, heavy air will sink to the lowest section of the appliance. You should bear this in mind when placing food in the appliance (see “Storing food in the refrigerator section”). However, if you are storing a large amount of similar food in the refrigerator at any one time, e.g. after your weekly shop, it is a good idea to turn on DynaCool. This way you can distribute the temperature on all the adjustable shelves inside the appliance more evenly so that all the food in the fridge zone will be chilled to about the same degree.
The temperature is set as normal with the temperature control.

Also switch on the DynaCool function when:

- The ambient temperature is high (above approx. 35 °C)
- The humidity levels are high (e.g. in the summer)

The fan will always switch on automatically when the compressor switches on.

Tip: As the energy consumption increases when DynaCool is switched on, you should turn the DynaCool function off again under normal conditions.

To save energy, the fan switches off automatically whilst the door is open.

Switching DynaCool on and off

- Touch the *OK* sensor control on the control panel.

will appear in the display (refrigerator section is selected).

- Touch *OK*.
- Use the < sensor control to scroll to the symbol.
- Touch *OK*.

When the DynaCool function is **switched on**, a dot appears in the upper corner of the display •.

- Use the > sensor control to scroll to the temperature you want and touch *OK*.

0 2

" <
7 -

-
"
-
" ! 1

! 1

5 " 1
" -
< "

-! - 5 "
1 7 6 1

(5 " 1 - >
: " $ 1 > ! $
! 1 -
"

5 " 1 -
-
' " 1 -

5 " - 1 -
"
6 1 ' - > " -
5 " 1 "
"

* 1

' " 1
- " " >
7 > " - -

' " 1 - >
-

1 N $ >
- "
-
"

- < "
/ " -
-
-

' "
" < "
"
6 1 N $
7
" - ' "
1
: "
-
> > SBi

Cleaning the inside of the appliance

The refrigeration appliance should be cleaned regularly (at least once a month).

If soiling is left on for any length of time, it may become impossible to remove under certain circumstances.
Surfaces may suffer discolouration or damage.
It is therefore best to remove any soiling immediately.

- Clean the **interior** with a clean sponge, lukewarm water and a little washing-up liquid.
- After cleaning, wipe with clean water and dry with a soft cloth.
- Clean the condensate channel and drain hole frequently using a cotton swab or similar item to ensure that condensate can drain away freely.
- Leave the door open to air the refrigeration appliance sufficiently for a short while and to prevent odour build-up.

Cleaning accessories by hand or in the dishwasher

The following components must be cleaned **by hand** only:

- The stainless steel trim
- Adjustable shelf with printing
- The flexible bottle rack (available as an optional accessory)
- All drawers and compartment lids (these vary depending on model)
- The plastic parts of the adjustable shelf with pivotable glass shelf (available as optional accessory)
- Organisation box (available as an optional accessory)

The following components are **dishwasher-safe**:

⚠ Risk of damage due to high dishwasher temperatures.
Parts of the refrigeration appliance may become unusable, e.g. deform, if they are washed in the dishwasher at more than 55 °C.
For dishwasher-safe components, always select dishwasher programmes with a maximum temperature of 55 °C.

Contact with natural dyes from carrots, tomatoes and ketchup, etc., may discolour the plastic parts in the dishwasher. This discolouration does not affect the stability of the parts.

- The bottle holder, egg tray, ice cube tray

- The door and bottle shelves in the appliance door (without stainless steel trim)
- Adjustable shelves (without the trim or printing)
- The glass shelves (without protective trims)
- The holder for the charcoal filter (available as an optional accessory)

Removing and dismantling accessories for cleaning

Dismantling the door shelf/bottle shelf

Remove the stainless steel trim before cleaning the door shelf/bottle shelf in the dishwasher.

To remove the stainless steel trim, proceed as follows:

- Place the door shelf/bottle shelf on the worktop.
- Pull the trim off the shelf beginning at one side.
- After cleaning the door shelf/bottle shelf, reattach the trim.

Dismantling an adjustable shelf

Remove the trim before cleaning the adjustable shelf. Proceed as follows:

- Place the shelf on a worktop covered with a soft material (e.g. a tea towel).

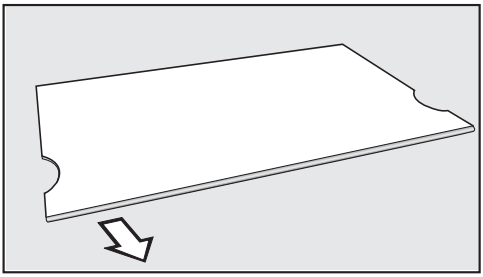

- Pull the trim off the shelf beginning at one side.
- After cleaning the shelf, reattach the trim.

Removing a drawer

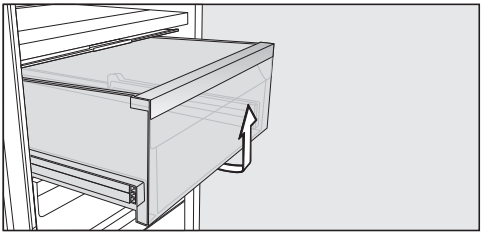

- Pull the drawer forwards and out.
- After cleaning, slide the drawer back in again.

Removing the compartment cover

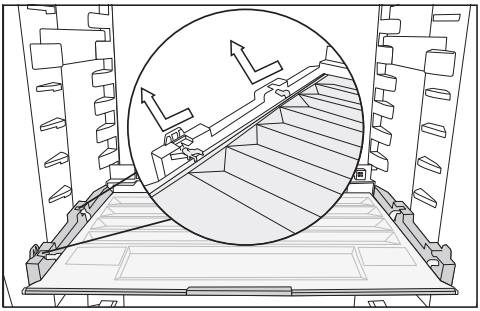

- Lift the cover at the front and pull it out.
- After cleaning, slide the compartment cover back in again.

Removing the drawers and glass shelves from the freezer section

- Pull the drawer forwards a little and out.
- Pull the glass shelf forwards a little and out.

Inserting the glass shelves and drawers into the freezer section

- Place the glass shelf on the guide rails at an angle.
- Push in and lower the glass shelf.
- Place the drawer on the guide rails at an angle.
- Push in and lower the drawer.

Replacing the charcoal filters (optional accessories)

Replace the charcoal filters in the holder every 6 months.

The symbol on the start display reminds you that the charcoal filter needs to be changed.

Replacement KKF-RF charcoal filters can be obtained from your dealer or from Miele's website.

- Pull the charcoal filter holder upwards to remove it from the adjustable shelf.

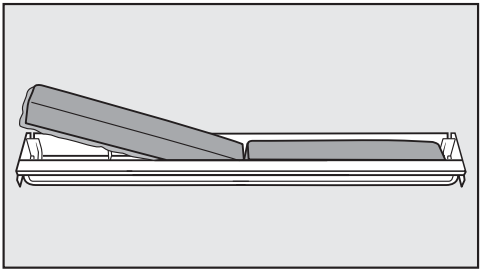

- Remove both charcoal filters and place the new filters with the surrounding edge pointing downwards in the holder.

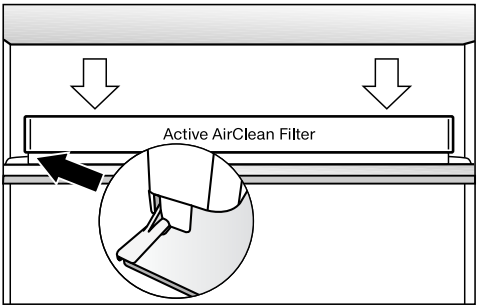

- Place the holder in the middle of the protective strip at the back of the adjustable shelf so that it clicks into position.
- Touch the *OK* sensor control to confirm that the filters have been replaced.

The "Replace charcoal filter" reminder will go out on the display and the counter will be reset.

The symbol will go out on the start display.

Cleaning the door seal

⚠ Risk of damage as a result of incorrect cleaning.

If you treat the door seal with oils or grease, it can become porous.

Do not use any oils or grease on the door seal.

- The door seal should be cleaned regularly with clean water, and then wiped dry with a soft cloth.

Cleaning the ventilation gaps

A build-up of dust will increase the energy consumption of the appliance.

- The ventilation gaps should be cleaned on a regular basis with a brush or vacuum cleaner (you could use a Miele vacuum cleaner dusting brush, for example).

After cleaning

- Replace all shelves and accessories in the refrigeration appliance.
- Switch the refrigeration appliance back on, if necessary.
- If you have activated the refrigerator section's Cleaning mode ☞:
  Touch the *OK* sensor control on the control panel.

☞ will appear in the display.

- Touch *OK*.

When Cleaning mode ☞ is switched off, the dot in the upper corner of the display disappears.

- Use the < and > sensor controls to scroll to the ⮌ symbol and touch *OK*.

The refrigerator section will start cooling again.

- Switch the SuperFreeze function ❄ on for a while so that the freezer section can cool down quickly.
- Switch on the SuperCool function ❄ for a while so that the refrigerator section can cool down quickly.
- Place food in the refrigerator section.
- Once the freezer has reached the required temperature, place the frozen food back in the freezer drawers and put them back in the freezer.
- Switch the SuperFreeze function ❄ off as soon as the temperature in the freezer is a constant -18 °C or colder.
- Close the appliance doors.

Problem solving guide

Many malfunctions and faults that can occur in daily operation can be easily remedied. Time and money will be saved because a service call will not be needed.

The following guide may help you to find the reason for a malfunction or a fault, and to correct it.

To prevent unnecessary loss of temperature it is advisable not to open the door while waiting for the appliance to be serviced.

Issue	Cause and remedy
The appliance is not getting cold, the interior lighting does not come on when the door is opened, and the display is not lit up.	The appliance is not switched on and the mains connection symbol ⊸ is lit up in the display. ■ Switch the appliance on.
	The plug is not inserted in the socket correctly. ■ Insert the plug correctly into the socket. The mains connection symbol ⊸ appears in the display when the appliance is switched off.
	Check whether the mains fuse has tripped. There could be a fault with the appliance, the household electrical wiring or another electrical appliance. ■ Contact your Miele dealer.
The compressor runs continuously.	This is not a fault. To save energy, the compressor runs at a lower speed, but for longer, when less cooling is required.
The compressor is switching on more frequently and for longer periods of time. The temperature in the refrigeration appliance is too low.	The ventilation gaps have been covered or become too dusty. ■ Do not block the ventilation gaps. ■ Dust the ventilation gaps regularly.
	The appliance doors have been opened too frequently, or a large amount of fresh food has been put in all at once for storage or freezing. ■ Only open the appliance doors when necessary and for as short a time as possible. After a while, the temperature will return to normal by itself.
	The appliance doors are not closed properly. A thick layer of ice may have formed in the freezer section. ■ Close the appliance doors.

Issue	Cause and remedy
	After a while, the temperature will return to normal by itself. If a thick layer of ice has already formed, this will affect cooling and increase energy consumption. ■ Defrost the refrigeration appliance and clean it.
	The ambient temperature is too high. The higher the ambient temperature, the longer the compressor runs. ■ See the information in “Installation – Installation site”.
	The refrigeration appliance was not properly installed in the niche. ■ Install the refrigeration appliance in the niche as described in the installation instructions supplied with it.
	The temperature setting in the refrigeration appliance is too low. ■ Correct the temperature setting.
	A large amount of food is being frozen at once. ■ See “Freezing and storing food”.
	The SuperCool function ❄ is still switched on. ■ Switch off the SuperCool function ❄ earlier to save energy.
	The SuperFreeze function ❄ is still switched on. ■ Switch off the SuperFreeze function ❄ earlier to save energy.

Issue	Cause and remedy
The compressor comes on less and less often and for shorter periods of time. The temperature in the refrigeration appliance rises.	This is not a fault. The temperature setting is too high. ■ Correct the temperature setting. ■ Check the temperature again after 24 hours.
	The frozen food begins to defrost. The ambient temperature is too low for this refrigeration appliance. If the ambient temperature is too low, the compressor will run less frequently. This may cause the freezer section to become too warm. ■ See the information in “Installation – Installation site”. ■ Increase the ambient temperature.
Ice or condensation has built up inside the refrigeration appliance. The appliance door may not close correctly.	The door seal has come out of its groove. ■ Check that the door seal is correctly positioned in the groove.
	The door seal is damaged. ■ Check whether the door seal is damaged.
The door seal is damaged and needs to be replaced.	No tools are required to change the door seal. ■ Change the door seal. A replacement is available from your Miele dealer.

Other problems

Issue	Cause and remedy
The floor of the refrigerator section is wet.	The condensate drain hole is blocked. ■ Clean the condensate channel and drain hole.
Food has frozen together.	The food packaging was not dry when placed in the freezer. ■ Use a blunt instrument, e.g. a spoon handle or plastic scraper, to prise it apart carefully.
There is no audible alarm even though the appliance door has been open for a long time.	This is not a fault. The alarm was switched off in Settings mode. If you want to switch the audible alarm back on: ■ In Settings mode ⚙, use the < or > sensor control to scroll to the 🔊 symbol. ■ Touch *OK*. ■ Use the < and > sensor controls to select the volume you want for alarms and buzzers. ■ Touch *OK*. 🔊 appears in the display when the alarms and buzzers are switched on.

Display warnings

Message	Cause and remedy
lights up on the display, the refrigeration appliance does not get cold even though the controls and the interior lighting are working.	Demo mode has been activated. ■ Touch *OK*. Miele will appear initially in the display, followed by the start screen. ■ Touch *OK*. ■ In Settings mode ⚙, use the < or > sensor control to scroll to the symbol. ■ Touch *OK*. After demo mode has been switched off, the refrigeration appliance switches off and must be switched on again.
is lit up on the display and the refrigeration appliance cannot be used.	The Cleaning mode function is still switched on. ■ Touch the *OK* sensor control on the control panel to switch off Cleaning mode. will appear in the display. ■ Touch *OK*. When Cleaning mode is switched off, the dot in the upper corner of the display goes out. ■ Use the < or > sensor control to scroll to the ⮌ symbol and touch *OK*. The refrigeration appliance will start cooling again.
Nothing is visible on the display. The display is completely blank.	**Energy-saving mode** is switched on. If the appliance has not been operated for a while (approx. 10 minutes), the display is switched off. ■ Touch the display. The display shows the most recent indication.
is lit up on the display and the appliance cannot be used.	The lock function has been activated. ■ Unlock the refrigeration appliance temporarily or switch the lock function off completely (see “Selecting further settings – Deactivating the lock function 🔒/🔓 temporarily/switching off completely”).

Message	Cause and remedy
The ⊛ symbol lights up in the start display and a buzzer sounds.	The ⊛ charcoal filter replacement indicator in the start display reminds you to replace the charcoal filter. ■ Replace the charcoal filter in the holder (see “Cleaning and care – Replacing the charcoal filters (optional accessory)”) and confirm that the charcoal filter has been replaced by touching the *OK* sensor control. The ⊛ symbol will go out on the start display.
⚠ lights up yellow in one of the temperature displays and an alarm also sounds.	The **door alarm** has been activated. ■ Touch *OK*. The alarm tone will stop and the ⚠ symbol will go out. ■ Close the relevant appliance door.

Message	Cause and remedy
🌡⚠ lights up in the freezer section temperature display and an alarm also sounds.	The **temperature alarm** has been activated; the temperature in the freezer section has risen higher or fallen lower than the temperature set. Possible reasons for this include: – The appliance door has been opened too frequently. – A large quantity of fresh food has been placed in the freezer without switching on the SuperFreeze function. – A prolonged power cut (mains outage) has occurred. – The refrigeration appliance has a fault. ■ Touch *OK*. The alarm message is confirmed: 🌡⚠ goes out and the alarm stops. The warmest temperature recorded in the freezer section will flash for about 1 minute in the display. Then the temperature display will change to the current temperature in the freezer section. You can exit from the flashing temperature display early: ■ Touch *OK*. The warmest temperature displayed will disappear. The display will then revert to showing the current temperature in the freezer. ■ Rectify the cause of the alarm. ■ Depending on the temperature displayed, you should check whether food in the freezer has started to thaw or has defrosted. If it has, it should be used as soon as possible. Defrosted food may only be re-frozen after it has been cooked.

Message	Cause and remedy
⚠ lights up in the display and an alarm also sounds.	Indication of an interruption to the power supply: the temperature in the freezer section over the last few days or hours has risen too high because of a power cut or interruption to the power supply. ■ Touch *OK*. The fault message is confirmed: ⚠ goes out and the alarm will stop. The warmest temperature recorded in the freezer section will flash for about 1 minute in the temperature display for the freezer section. Then the temperature display will change to the current temperature in the freezer section. You can exit from the flashing temperature display early: ■ Touch *OK*. The warmest temperature displayed will disappear. The display will then revert to showing the current temperature in the freezer. The appliance will go back to the last temperature setting when the power is back on. ■ Rectify the cause of the alarm. ■ Depending on the temperature displayed, you should check whether food in the freezer has started to thaw or has defrosted. If it has, it should be used as soon as possible. Defrosted food may only be re-frozen after it has been cooked.

Message	Cause and remedy
⚠ **lights up red in the display, a fault code F with numbers appears and an alarm also sounds.**	There is a fault. ■ To switch the alarm off touch 🔇 in the display. ■ Contact your Miele dealer. To report the fault you need the fault code and also the model number and serial number of your appliance. You can access these in the display. ■ To do this touch ℹ in the display. The appliance data required will be shown in the display. Confirm with OK to exit the information display and the fault code will be shown again in the display. The appliance can be switched off directly from the fault code display. ■ Touch ⏻.
	There is an **appliance fault**: this display always has priority over any settings which have just been selected. An appliance fault has priority over any current door and/or temperature alarms displayed.

The interior lighting is not working

⚠ Risk of electric shock due to exposed, live electrical components.
When removing the lighting cover, there is a risk of coming into contact with live electrical components.
Do not remove the lighting cover. The LED lighting may only be repaired or replaced by your Miele dealer.

⚠ Risk of injury from LED lighting.
This lighting corresponds to risk group RG 2. If the cover is defective, there is a risk of eye injury.
If the lighting cover is defective, do not look from a close range directly into the lighting with optical instruments (e.g. magnifying glass or similar).

Issue	Cause and remedy
The interior lighting is not working.	The refrigeration appliance has not been switched on. ■ Switch the appliance on.
	To avoid overheating, the lighting switches itself off automatically after approx. 15 minutes if the door is left open. If this is not the case, then there is a fault. ⚠ Risk of electric shock There are live electrical components under the lighting cover. The LED lighting may only be repaired or replaced by a Miele authorised service technician. ⚠ Risk of injury from LED lighting The light intensity corresponds to laser beam class 1/1M. The lighting covers must not be removed or damaged, or be removed due to damage. This could cause injury to your eyes. Do not look into the LED lighting (laser beam class 1/1M) with optical instruments (e.g. a magnifying glass or similar). ■ Call your Miele dealer.

Noises

Normal noises	What is causing them?
Brrrrr ...	A humming noise is made by the compressor. This noise can get louder for brief periods when the compressor switches on.
Blubb, blubb ...	A gurgling noise can be heard when the refrigerant circulates through the pipes.
Click ...	Clicking sounds occur whenever the thermostat switches the compressor on or off.
Sssrrrrr ...	You can sometimes just hear the sound of the fan inside the appliance.
Crack ...	A cracking sound can be heard when materials expand inside the refrigeration appliance.
Please bear in mind that a certain amount of noise is unavoidable (from the compressor and the refrigerant circulating through the cooling circuit).	

Noises	Cause and remedy
Rattling, vibrating	The refrigeration appliance is uneven. Realign the appliance using a spirit level by raising or lowering the adjustable feet underneath the refrigeration appliance. For niches of 140 cm and more: place the stabilising rods supplied underneath the appliance base.
	Drawers, baskets or shelves are jiggling or are stuck. Check all removable items and refit them correctly.
	Bottles or containers are touching. Separate them.

Contact in case of malfunction

In the event of any faults which you cannot remedy yourself, please contact your Miele dealer.

Contact details for your Miele dealer are given at the end of this document.

Please note that telephone calls may be monitored and recorded for training purposes and that a call-out charge will be applied to service visits where the problem could have been resolved as described in this booklet.

Please quote the model and serial number of your appliance when contacting your Miele dealer. This information can be found on the data plate.

The data plate can be found in the interior cabinet of the refrigeration appliance.

Displaying appliance information

This can be found in Settings mode under Information ℹ (see “Selecting further settings”) or on the data plate inside the refrigeration appliance.

EPREL database

From 1 March 2021, information on energy labelling and ecodesign requirements will be available in the European Product Database (EPREL). You can find the product database at the following link https://eprel.ec.europa.eu/. You will be asked to enter the model identifier.

The model identifier can be found on the data plate.

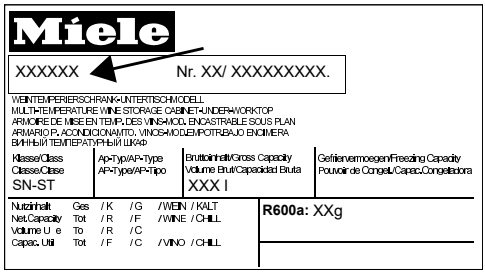

Warranty

For more information on country-specific warranty terms and conditions, please contact your Miele Dealer.

Miele Saudi Arabia
AWAD BADI NAHAS TRADING CO. LTD
Head Office:
Jeddah
P.O. Box 11529 Jeddah 21463
Tel. +966 12 2560888, Fax. +966 12 2560555
Hotline for customer care: 920003240
Website: www.awadnahas.com

Branches:
Jeddah
Madina Road
Tel. +966 12 6970060, Fax. +966 12 6970012
Jeddah
Sitteen Street
Tel. +966 12 6611675, Fax. +966 12 6606852
Jeddah
Miele Gallery
Al Thanyyan Group Building, Al-Madina Road,
Near, Al Rowdah District, Jeddah
Tel. +966 12 6989339 Ext. 100
Fax. +966 12 6989339 Ext. 200
Riyadh
Olaya Street
Tel. +966 11 2013501, Fax. +966 11 2013502
Taif
Hadiya Street
Tel. +966 12 7327001, Fax. +966 12 7369596
Khobar
Al Zahran Road
Tel. +966 13 8646150, Fax. +966 13 8646190

Miele United Arab Emirates
Miele Appliances Ltd.
Showroom 1
Eiffel 1 Building
Sheikh Zayed Road, Umm Al Sheif
P.O. Box 114782 - Dubai
United Arab Emirates

Tel. +971 4 3044 999
Fax. +971 4 3418 852
800-MIELE (64353)
Email: info@miele.ae
Website: www.miele.ae
Webshop: shop.miele.ae

Miele Kuwait
Al Wazzan United Trading Co.
P. O. Box : 3379
Hawally, 32034 Kuwait
Tel.: 00965-22001010
Fax: 00965-24838292
Email: mail@alwazzanunited.com
Website: www.alwazzanunited.com

Showroom
Al Wazzan Electronics
Odah Al-Mahanna Complex
Tunis Street, Hawally, Kuwait
Tel.: 00965- 22001010
Ext: 202 / 205 / 206

Manufacturer: Miele & Cie. KG, Carl-Miele-Straße 29, 33332 Gütersloh, Germany

Miele

KFNS 7734 D

en-AE, SA

M.-Nr. 12 124 820 / 02