Operating and Installation Instructions
Built-in Coffee System



To prevent accidents and machine damage, you **must** read these instructions before installation or use.

en-US, CA

M.-Nr. 12 867 311

Contents

IMPORTANT SAFETY INSTRUCTIONS **4**
Preparing your appliance for an extended vacation 10

Appliance description **14**
Front view 14
Interior view 15
The milk flask 16
Central spout with cup rim sensor . 16

Controls and indicators **17**
Symbols in the display 18
Drink button symbols 19

Operation **20**
Selecting a menu and navigating within a menu 20

Initial commissioning **22**
Before using for the first time 22
Networking 22
Turning on for the first time 23

Filling the coffee bean container .. **25**

Filling the water tank **26**

Switching on and off **27**
Switching the coffee machine on 27
Switching the coffee machine off ... 27
Preparing for an extended period of inactivity 27

Preparing beverages **28**
Coffee 28
Coffee drinks in detail 28
Milk and milk alternatives 28
Filling and inserting the milk flask 29
Making a coffee drink 30
Canceling a drink 30
DoubleShot 30
Making 2 portions 31
Preparing a pot of coffee 31
Tea 31
Making tea 32
Starting the TeaTimer manually .. 33
Preparing a pot of tea 33
Dispensing warm or hot water 34

Expert Mode **35**
Switching Expert mode on and off .. 35
Expert mode: changing the portion size 35

Grinder setting **36**
Identifying the ideal grinder setting. 36

Parameters **37**
Amount of coffee 37
Pre-brewing ground coffee 37
Brewing temperature for coffee drinks 37
Dispensing temperature for tea drinks, warm water, and hot water .. 37
Portion size 37
Displaying and changing parameters 38
Changing the portion size 38

Profiles **39**
Profiles 39
Creating a profile 39
Changing drinks within a profile 39
Making drinks stored in a profile 39
Processing a profile 39
Setting when the profile should change 39
Changing the profile name 40
Deleting the profile 40

MobileStart **41**
Preparing MobileStart 41
Switching MobileStart on and off 41

Settings **42**
Displaying and changing Settings 42
Language 42
Time 42
Date 42

Contents

Timer 42
On at 43
Off at 43
Off after 43
TeaTimer 43
Volume 43
Display brightness 43
Lighting 43
Info (display information) 44
Fresh water 44
Altitude 44
Performance Mode 44
Eco Mode 44
Barista Mode 44
Latte Mode 44
Party Mode 44
Water hardness 45
System lock 46
Miele@home 46
Performing Scan & Connect 47
Remote control 47
RemoteUpdate 47
Software version 48
Showroom program (Demo mode) 48
Factory default settings 48

Cleaning and care **49**
Overview of cleaning intervals 49
Clean by hand or in dishwasher 50
Unsuitable cleaning agents 50
Opening the appliance door 51
Cleaning the drip tray and grounds container 51
Cleaning the drip tray cover 53
Cleaning the water container 54
Cleaning the central spout 54
Cleaning the cup rim sensor 56
Cleaning the milk flask with lid 56
Cleaning the milk valve (daily) 57
Cleaning the milk valve (once a month) 57
Cleaning the bean containers 60
Cleaning the brew unit and interior by hand 61
Cleaning the interior, inside of the appliance door, and drip tray 63
Cleaning the appliance front 64
Maintenance programs 64
Opening the Maintenance menu 64
Rinse appliance 64
Rinse milk pipework 64
Cleaning the milk pipework 64
Degreasing the brew unit 65
Descaling the appliance 68
Lubricating the brew unit 69

Frequently asked questions **70**
Messages in the display 70
Unusual performance of the coffee system 72
Unsatisfactory results 75

Service and warranty **78**
Contact in the event of a fault 78
Appliance warranty and product registration 78
Availability of replacement parts, repair services and maintenance information 78

Accessories **79**

Caring for the environment **80**
Saving energy 80

Installation **81**
Plumbed water connection 81
Electrical connection 83
Installation dimensions 84
Installation in a tall cabinet 84
Building in the coffee machine 86
Door opening limiters 88

Technical data **89**

Copyrights and licenses **90**

FCC Declaration of Conformity **91**

IMPORTANT SAFETY INSTRUCTIONS

This coffee machine complies with all the stipulated safety requirements. Inappropriate use can, however, lead to personal injury and material damage.

Read the operating instructions carefully before using the coffee machine. They contain important information on safety, installation, use, and maintenance. This prevents both personal injury and damage to the coffee machine.
Miele expressly and strongly advises you to read and follow the instructions in the chapter on installing the coffee machine as well as the safety instructions and warnings.
Miele cannot be held liable for injury or damage caused by non-compliance with these instructions.

Keep these operating instructions in a safe place and pass them on to any future owner.

Appropriate use

▶ This coffee machine is intended for household use.

▶ Do not use the coffee machine outdoors.

▶ This coffee machine must not be used at altitudes above 6560 ft (2000 m).

▶ The machine is intended only for household use and for the preparation of drinks such as espresso, cappuccino, latte macchiato, tea, etc. All other types of use are not permitted.

▶ Persons who lack physical, sensory or mental abilities or experience with the machine should not use it without supervision or instruction by a responsible person.

Safety with children

⚠ Danger of burning and scalding at the dispensers.

Children's skin is far more sensitive to high temperatures than that of adults.

Ensure children do not touch hot surfaces of the coffee machine or place parts of their body under the dispensers.

▶ Keep the coffee system out of reach of children.

▶ Children must be kept away from the coffee machine unless they are constantly supervised.

▶ Children must be aware of the potential dangers caused by incorrect operation.

▶ Children should be supervised when they are near the coffee system. Do not allow them to play with it or to use the controls.

▶ Children must not be allowed to clean the coffee machine unsupervised.

▶ Remember that coffee and espresso are not suitable drinks for children.

▶ Danger of suffocation. While playing, children may become entangled in packaging material (such as plastic wrapping) or pull the packaging material over their head, presenting the risk of suffocation. Keep packaging material away from children.

IMPORTANT SAFETY INSTRUCTIONS

Technical safety

▶ Installation work may only be carried out by a qualified specialist or Miele Service.

▶ A damaged coffee system could be dangerous. Before building in the machine, check it for any externally visible damage. Do not use a damaged machine.

▶ Before connecting the coffee system, check the voltage and frequency indicated on the data plate against the voltage and frequency of the household electrical supply.
This data must correspond in order to prevent damage to the coffee system. If in doubt, consult a qualified electrician.

▶ Be certain your appliance is properly installed and grounded by a qualified technician. To guarantee the electrical safety of this appliance, continuity must exist between the appliance and an effective grounding system. It is imperative that this basic safety requirement be met. If there is any doubt, have the electrical system of the house checked by a qualified electrician.

▶ Reliable and safe operation of the coffee system can only be guaranteed if it is connected to the electrical supply.

▶ Do not connect the machine to the electrical supply using an extension cord or power bar.

▶ The coffee machine may not be used in mobile installations such as ships.

▶ For safety reasons, this machine may only be used when it has been built in.

▶ Do not place on or near a hot gas or electric burner, or in a heated oven.

▶ Unplug the coffee machine from the power supply immediately if you notice any damage or smell burning.

▶ Ensure that the power cord will not be pinched or damaged by any sharp edges.

▶ To reduce the risk of injury, do not drape cord over the counter top or table top where it can be pulled on by children or tripped over unintentionally.

▶ Do not operate any appliance with a damaged cord or plug or after the appliance malfunctions, or has been damaged in any manner. Return appliance to the nearest authorized service facility for examination, repair or adjustment.

▶ To protect against fire, electric shock and injury to persons do not immerse cord or plugs in water or other liquid.

▶ To reduce the risk of fire:

- Do not place any heating or cooking appliance beneath the appliance without a shelf in between.
- Do not mount unit over or near any portion of a heating or cooking appliance without a shelf in between.
- Do not mount over a sink.
- Do not store anything directly on top of the appliance surface when the appliance is in operation.

▶ If the coffee machine is to be built in above another appliance, there must be a full-width, closed shelf between them (except when it is combined with a Gourmet warming drawer or a built-in vacuum drawer).

▶ Only use the coffee system in rooms where the ambient temperature is between +60°F (16°C) and +100°F (38°C).

▶ A minimum installation height of 33 7/16" (850 mm) from floor must be observed.

▶ This coffee machine must not be installed behind a closed cabinet door. Heat and moisture can build up behind the cabinet door when closed. This can result in damage to the machine and/or cabinetry.

▶ The manufacturer's warranty may be invalidated if the coffee machine is not repaired by a qualified specialist or by Miele Service.

▶ Unauthorized installation and repairs could result in unforeseen dangers for the user, for which the manufacturer cannot accept liability. Maintenance and repairs on the coffee machine must only be carried out by a qualified specialist or Miele Service.

▶ For repairs, the coffee system must be disconnected from the electrical power supply.
The coffee system is only disconnected from the power supply if

- the circuit breaker has been tripped, or
- the fuse is removed, or
- the power cord is disconnected from the power supply.
  Pull the plug, not the cord, to disconnect the appliance from the power supply.

▶ If the power cord is damaged, it should only be replaced with a specific power cord of the same type (available, for example, from the Miele online store or from Miele Service). For safety reasons, this replacement should only be carried out by a qualified specialist or Miele Service.

▶ Never open the outer casing of the machine. Tampering with electrical connections or components and mechanical parts is highly dangerous to the user and can cause operational faults or electric shock.

Plumbed water connection

▶ Do not connect the coffee system to a hot water supply.

▶ The non-return valve must be easily accessible when the coffee system is built in.

▶ The protective sleeve of the water intake hose must not be damaged or become kinked. This will cause it to leak.

▶ The integrated water protection system offers protection from water damage, provided the following conditions are met:

- The coffee machine is correctly installed, connected to the electricity supply, and plumbed in.
- If a fault is identified, the coffee machine must be repaired immediately.
- The water supply valve is turned off when the appliance is not in use for an extended period (e.g., vacation).

Correct use

⚠ Danger of burning and scalding at the dispensers.
The liquids and steam dispensed are very hot.

Keep away from the area underneath the dispensers when hot liquids and steam are being dispensed.

Do not touch hot components.

Hot liquid or steam could spatter from the nozzles. Ensure that the central spout is clean and installed correctly.

Before opening the door, remove any containers from the drip tray in the machine door.

Water in the drip tray can also be very hot. Take care when emptying it.

⚠ Risk of injury to the eyes!

Never look at the lighting directly or using optical instruments (e.g. magnifying glass).

▶ Please note the following regarding water:

- The water quality must conform to the requirements for drinking water in the country in which the coffee machine is being used.
- When using the water container: Only use cold, fresh tap water to fill the water container. Hot or warm water or other liquids can damage the coffee machine.
- Change the water every day to prevent a build-up of bacteria. When using a plumbed-water connection: empty the water container once a day.
- Do not use sparkling water.

▶ Only put roasted coffee beans in the bean containers. Do not place coffee beans which have been treated with additives or ground coffee inside the bean containers.

▶ Do not fill the bean containers with any type of liquid.

▶ Do not use green (unroasted) coffee beans or mixtures of coffee beans which contain green coffee beans. Green coffee beans are very hard and still contain residual moisture. These can damage the coffee machine grinder as soon as grinding begins.

IMPORTANT SAFETY INSTRUCTIONS

▶ Do not use oily beans or beans that have been treated with caramel, sugar, or other substances. Sugar and oil will damage the coffee system.

▶ Only use plain milk. Most sugary additives can clog the milk lines and damage the machine.

▶ If using dairy milk make sure that it has been pasteurized.

▶ When making tea, please follow the instructions on the tea packaging.

▶ Do not place flaming alcohol mixtures underneath the central spout. The flames could ignite plastic components and cause them to melt.

▶ Do not swing from or hang anything on the machine front when it is open as this could damage the hinges of the machine.

▶ Do not use the coffee system to clean objects.

Preparing your appliance for an extended vacation

▶ If you elect to turn off the water to your home for an extended period of time, please note that this may not be enough to reduce the risk of a leak. To be completely safe, you must turn off the water supply to each individual appliance. This means under the sink for a dishwasher, at the laundry bib for your washer, etc.

▶ Make sure that the coffee machine does not come into contact with hand sanitizer or sunscreen, as this will damage the surfaces.

Accessories and parts

▶ If defective safety-relevant components are replaced, full compliance with safety requirements may only be guaranteed if genuine Miele replacement parts are used.

▶ The use of accessory attachments not recommended by the appliance manufacturer may result in fire, electric shock or injury to persons.

▶ Miele assumes no liability for the use of accessories that are not genuine Miele accessories. Miele may not be liable for warranty, guarantee, and/or product liability claims if damage or defects are due to the use or installation of accessories that do not originate from Miele or have not been approved by Miele.

Cleaning and maintenance

▶ Unplug from outlet when not in use and before cleaning. Allow to cool before putting on or taking off parts, and before cleaning the appliance.

▶ Clean the coffee machine and the milk flask daily, particularly before using for the first time.

▶ All parts of the milk system need to be cleaned thoroughly and regularly.

▶ Descale the coffee system regularly depending on the water hardness level in your area. Descale the machine more frequently in areas with very hard water. Miele cannot be held liable for damage arising from insufficient descaling, the use of incorrect descaling agent or the use of descaling agent that is not of the appropriate concentration.

▶ Degrease the brew unit regularly with Miele cleaning tablets. Depending on the natural oil content of the coffee used, the brew unit can become blocked quite quickly.

▶ Do not use a steam cleaner to clean this machine. Steam could reach electrical components and cause a short circuit.

▶ Rinsing coffee grounds down the drain can cause the sink to clog. Instead, dispose of your coffee grounds appropriately as biodegradable waste (where facilities exist) or by composting.

For machines with stainless steel surfaces:

▶ Do not use sticky notes, transparent adhesive tape, masking tape, or other types of adhesive on the stainless steel surfaces. These will damage the stainless steel surfaces, causing them to lose their dirt-repellent protective coating.

▶ The finish on stainless steel surfaces is susceptible to scratching. Even magnets can cause scratching.

SAVE THESE INSTRUCTIONS

Appliance description

Front view

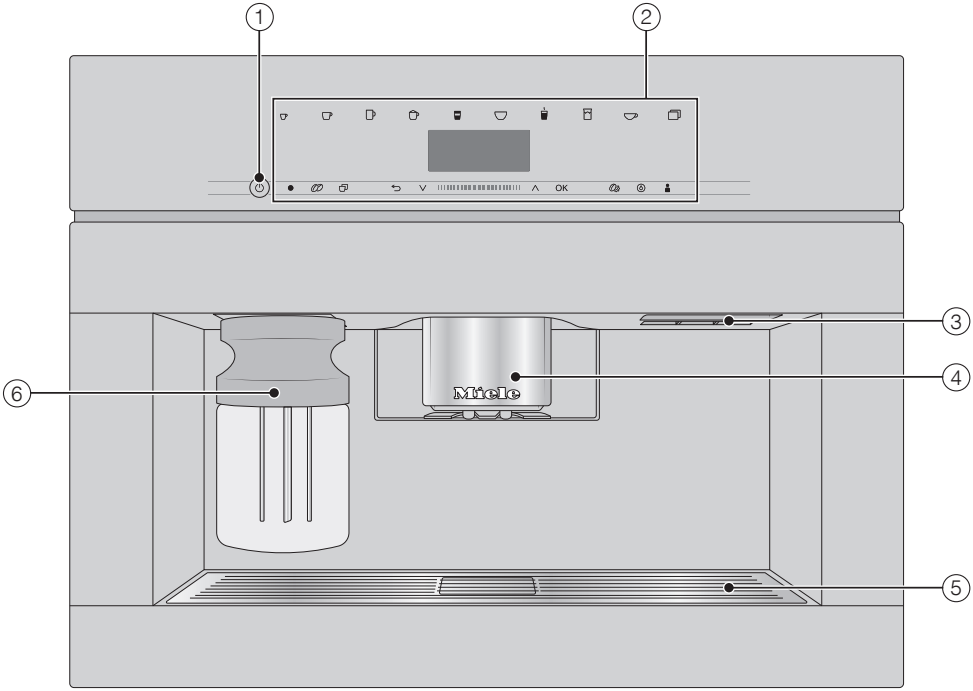

① On/Off button ⏻
② Control panel
③ Door handle
④ Height-adjustable central spout with lighting
⑤ Drip-tray cover
⑥ Milk container

Interior view

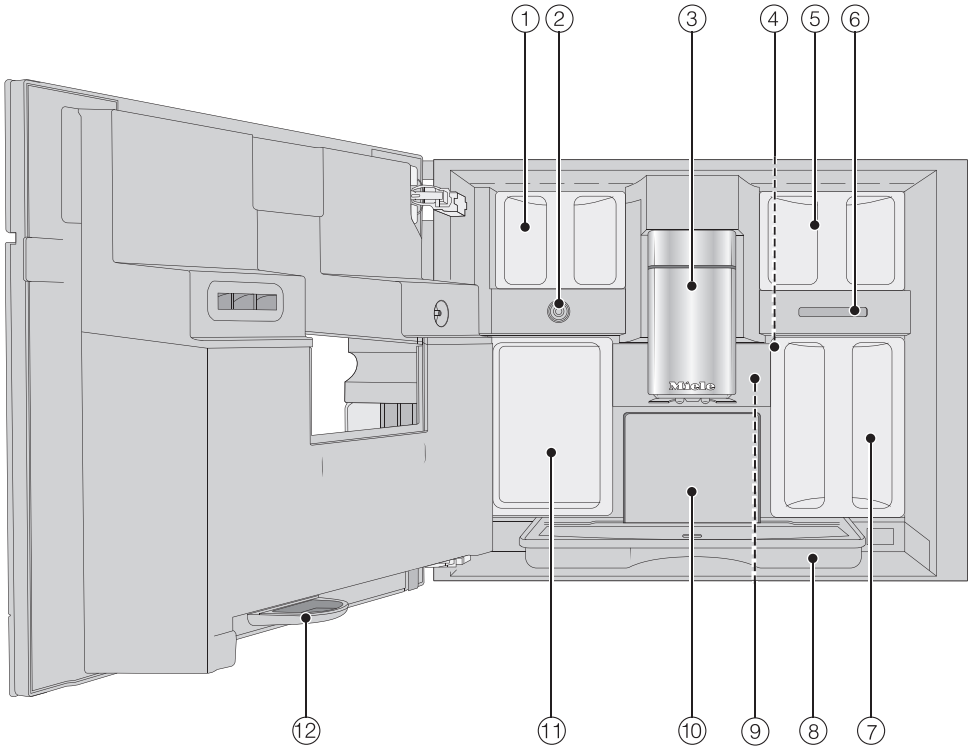

① Bean container
② Milk valve
③ Height-adjustable central spout with lighting
④ Grinder setting
⑤ Bean container
⑥ Fan outlet
⑦ Water container
⑧ Drip tray with lid
⑨ Brew unit
⑩ Grounds container
⑪ Maintenance container
⑫ Drip tray

The milk flask

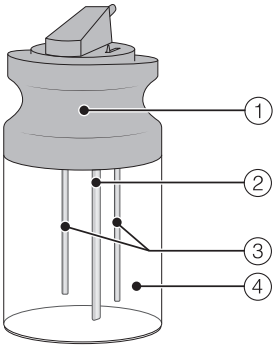

① Lid

② Milk intake tube

③ Sensor rod

④ Glass flask

Central spout with cup rim sensor

The central spout with cup rim sensor features automatic spout adjustment. Thanks to this spout adjustment function, the central spout moves down automatically at the start of a drink preparation process and the cup rim sensor stops it at the optimum height for the cups or glasses being used.

The central spout and cup rim sensor **cannot** be manually adjusted.

When the coffee machine is switched off, the central spout will be in the middle position.

When a maintenance program is being carried out, the central spout will move to the height of the maintenance container or into a low maintenance position.

Make sure that the main position is in the top or middle position before you open the door.

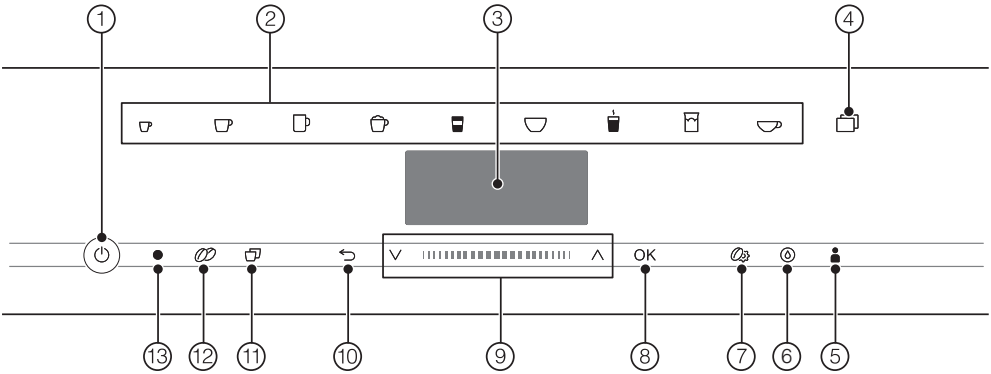

① **On/Off button** ⏻
For switching coffee machine on and off

② **Drink buttons**
For making drinks

③ **Display**
For showing information about the current action or status

④ **sensor button**
- For making other drinks, e.g., Ristretto, Capuccino italiano
- For making a pot of tea or coffee
- Settings menu

⑤ Profiles **sensor button**
For creating and managing profiles

⑥ Maintenance **sensor button**
Maintenance programs, e.g., Descale

⑦ Parameters **sensor button**
For displaying or changing drink settings

⑧ ***OK*** **sensor button**
For confirming display messages and saving settings

⑨ **Navigation area with arrow buttons** ∧∨
For scrolling through lists, selecting entries, or changing values

⑩ **"Back"** ⮌ **sensor button**
For returning to the previous menu and canceling unwanted actions

⑪ **"2 portions"** **sensor button**
For dispensing 2 portions of a drink at once

⑫ **"DoubleShot"** **sensor buttons**
For making a particularly strong and aromatic coffee by using twice as much ground coffee but the same amount of water

⑬ **Optical interface**
(for Miele Technical Service only)

Controls and indicators

Symbols in the display

The following symbols may also appear in the display in addition to the text:

Symbol	Explanation
	This symbol indicates the Settings menu and the Language menu option.
	This symbol indicates that there is additional information and advice about using the coffee machine. Select *OK* to confirm the messages.
	The symbol is displayed when the system lock is switched on. The controls are locked.
	The symbol and the desired switching-on time appear in the display 23:59 hours before the coffee machine is due to switch on if the Turn on at timer and setting for displaying the time are activated.
	The TeaTimer kitchen timer has been started (see “TeaTimer”). The remaining brewing time is shown next to the symbol.
	This symbol appears while the appliance is being descaled. This symbol can also be found on the water container: Fill up to this mark.
	This symbol appears during the Clean milk pipework maintenance program. (This symbol is also found on the water container: Fill up to this mark with water).
	If Miele@home has been activated for the coffee machine, these symbols represent the quality of the Wi-Fi connection. They indicate the strength of the Wi-Fi connection in increments from strong to not connected.
	“MobileStart” appears if Miele@home is set up for the coffee machine and MobileStart is switched on.

Drink button symbols

- Espresso
- Coffee
- Long coffee
- Capuccino
- Latte macchiato
- Caffè latte
- Hot milk
- Milk froth
- Tea water

Sensor controls

To operate the coffee machine, tap the sensor controls with your finger.

An audible signal is generated each time a sensor control is tapped. You can adjust the volume of the signal tones or switch the tones off (see “Customizing settings – Volume”).

Drinks menu

When the following appears in the display, you are in the drinks menu: Select drink.

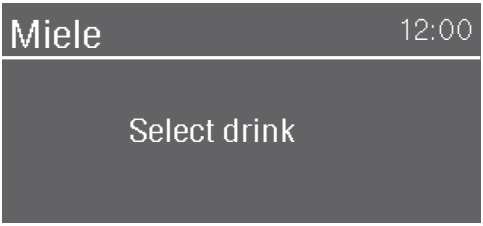

You can find more drinks in the Additional menu (▭ sensor button).

Navigation area

To select a menu option, keep pressing the arrow buttons ∧ and ∨ until the option you want is highlighted.

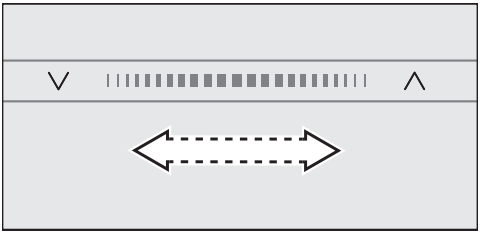

To scroll more quickly through the options, swipe your finger right or left in the area between the arrows.

As soon as you reach a confirmable value, message, or setting, the *OK* sensor button will light up orange.

Tap *OK* to confirm your selection.

Selecting a menu and navigating within a menu

To select a menu, tap the relevant sensor control, e.g., the ▭ sensor control.



You will then be able to start an action or change settings in the menu. A scroll bar at the right of the display shows that additional options or text are available.

The setting which is currently selected in a list will have a checkmark ✓ beside it.

Exiting a menu or canceling an action

To exit the current menu, tap the ⮌ sensor button.

Alternatively, tap the lit orange sensor button again to return to the drinks menu.

Entering a name

Letters and numbers are entered via the navigation area. You can choose between upper and lower case letters.

Tip: It is best to select short names.

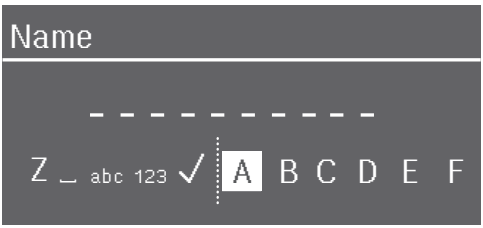

- To enter a character, highlight the one you want and confirm your choice with *OK*.
- To delete a character, tap the ⮌ sensor control.
- To save the name, select the checkmark ✓ and confirm with *OK*.

Before using for the first time

- Connect the coffee machine to the plumbed-water and power supplies.
- Install the coffee machine.
- Remove any notices from the machine.
- Remove the protective film from the drip-tray cover.
- Clean the water container, the bean containers, and the central spout.
- Remove the bean containers and fill them with roasted coffee beans.

Networking

Your coffee machine is equipped with an integrated Wi-Fi module. The Wi-Fi module makes it possible to connect to your home network and to use the Miele app on a mobile device.

Once your coffee machine has been connected via Wi-Fi, the connection is automatically re-established every time it is switched on.

Make sure that your Wi-Fi network signal is strong enough in the place where you intend to install your coffee machine.

Connecting your coffee machine to your Wi-Fi network will increase energy consumption, even when the machine is switched off.

Smart Extras via the Miele app*

Networking via the Miele app gives you access to numerous Smart Extras, including:

- Access status information.
- Use additional helpful functions.
- Keep your coffee machine up to date with the latest Miele developments via software updates.

You can find more detailed information about Smart Extras on the Miele website, in the Apple App Store®, or in the Google Play Store™.

*This is a separate digital offer from Miele & Cie. KG. The range of functions can vary depending on the model and the country. Acceptance of the General Terms and Conditions and Privacy Policy for Miele digital products and services in the Miele app required. Miele reserves the right to change or discontinue the digital offers at any time.

Requirements for networking

Note the following requirements for networking:

1. A home network is available at the installation site.
   Have the Wi-Fi password ready.
2. The Miele app is available on a mobile device.
3. You have a user account in the Miele app.

Miele App

The Miele App is available to download free of charge from the Apple App Store® or from the Google Play Store™.



Turning on for the first time

- Tap the On/Off button ⏻.

Selecting the display language

- Select the desired display language.

You might also be asked for your location.

The choice of location determines how the time of day is displayed, e.g., in the 12 or 24-hour format, as well as how units are displayed.

Setting up the network (Miele@home)

The following appears in the display during commissioning: Set up "Miele@home".

Tip: You can also set up Miele@home at a later time by scanning the QR code on the inside of the appliance door (see "Setting up Scan & Connect"). In this case, select Skip.

- Touch Continue.
- Select the connection method you wish to use.
- Follow the instructions provided in the coffee machine display and in the Miele app.

Connection successfully established appears in the display.

Any new software that is available for your coffee machine will be downloaded via RemoteUpdate the next time the appliance is switched on. In this case, you will be notified that you can install the new software (see "RemoteUpdate" section).

- Touch *OK* to proceed with commissioning.

Setting the date

- Set today's date.
- Confirm with *OK*.

Setting the time of day

- Set the current time of day.
- Confirm with *OK*.

If the coffee machine has been connected to a Wi-Fi network and signed into the Miele app, the time will be synchronized based on the location setting in the Miele app.

Setting the water hardness

Your local water authority will be able to tell you the hardness of the water in your area.

More information can be found under "Settings – Water hardness".

- Enter your local water hardness (in °dH) and confirm with *OK*.

Selecting the water supply (Water connection)

The coffee machine is equipped for operation with a fixed plumbed water connection. You can choose between the following water supply options:

- **On**: The water container will be filled with drinking water automatically via the plumbed water connection.
- **Off**: You must fill the water container manually. A message appears in the display to inform you of this.

■ Select the water supply.

■ Confirm with *OK*.

The setting is now saved.

Selecting the Performance Mode

You can select the appropriate Performance mode to suit your personal preferences (see “Customizing settings – Performance mode”):

- **Eco Mode**: This mode consumes the least amount of energy (default setting).
- **Barista Mode**: This mode has been optimized for unadulterated coffee enjoyment.
- **Latte Mode**: In this mode, milk-based drinks can be prepared within a much shorter space of time.

■ Select the Performance mode you want.

■ Confirm with *OK*.

Selecting a Performance mode other than Eco Mode increases the energy consumption of the coffee machine.

Your machine has been successfully set up and is ready for use.

To ensure that any coffee residues from the factory testing process are removed from the brewing system, please throw away the first 2 cups of coffee when using the coffee machine for the first time.

⚠ Risk of damage to the grinder due to incorrect operation.
The coffee machine will be damaged if the bean container is filled with unsuitable substances such as liquids, ground coffee, or coffee beans treated with sugar, caramel, or similar.
In addition, green (unroasted) coffee beans or mixtures of coffee beans which contain green coffee beans can damage the grinder. Green coffee beans are very hard and still contain residual moisture. These can damage the coffee machine grinder as soon as grinding begins.
Only put roasted coffee beans in the bean containers.

Coffee or espresso can be made from whole roasted coffee beans which are freshly ground for each cup. This requires the bean containers to be filled with coffee beans.

The coffee machine has 2 bean container drawers on the top left and right. Coffee beans from all 3 bean containers are mixed together during grinding.

- Open the appliance door.

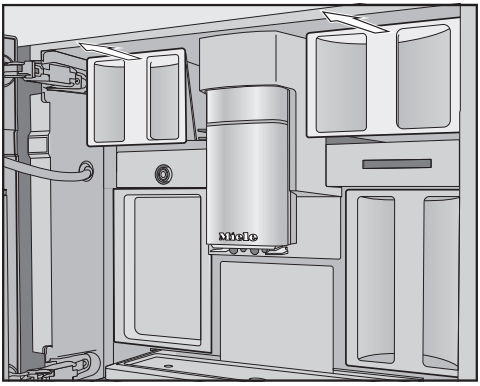

- Pull out the bean containers.
- Take the lids off the bean containers and fill them with coffee beans.
- Put the lids back on the bean containers to seal them.
- Slide the bean container drawers all the way into the coffee machine.
- Close the appliance door.

Filling the water tank

⚠ Risk to health due to contaminated water.
Bacteria can develop in water which has been sitting in the water container for too long and is a risk to your health. Water that gets left in the inlet hose can also impair the flavor if you do not make any drinks for a long time.
Change the water in the water container **every day**.
Discard the first full container of water if you have not made any drinks for a while.

If the coffee machine is plumbed into the drinking water supply, the water container will fill automatically as soon as the coffee machine is switched on.

You can fill the water container manually at any time.

⚠ Risk of damage due to incorrect operation.
Unsuitable liquids such as hot or warm water or other liquids can damage the coffee machine.
Carbonated water leaves too much limescale in the coffee machine.
If filling the water container manually: Only use fresh, cold tap water.

- Open the appliance door.

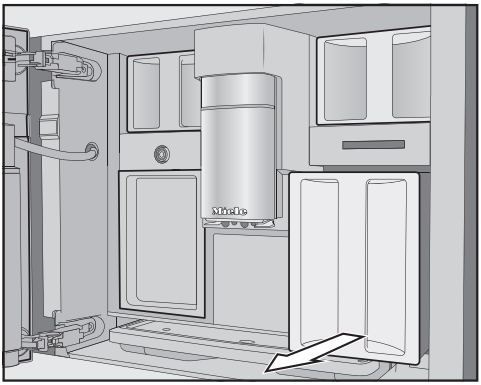

- Pull the water container forward to remove it.
- Fill the water container with fresh, cold drinking water up to the *max.* mark.
- Push the water container into the appliance.
- Close the appliance door.

Switching the coffee machine on

■ Tap the On/Off switch ⏻.

The coffee machine heats up and rinses the pipework. Hot water will run out of the central spout.

You can now make drinks.

If the coffee machine is already at operating temperature, rinsing will not take place when the machine is switched on.

Switching the coffee machine off

■ Tap the On/Off switch ⏻.

If coffee has been dispensed, the coffee machine will rinse the pipework automatically before switching off.

While dispensing a drink or during maintenance processes, moisture builds up in the coffee machine. Once a drink has been dispensed or the machine has been switched off, the internal fan will continue to run until the interior is sufficiently dehumidified. You will hear an accompanying noise.

Preparing for an extended period of inactivity

If the coffee machine is not going to be used for more than 3 days, such as during a vacation, proceed as follows:

■ Empty the drip tray, the grounds container, and the water container.

■ Clean all parts thoroughly, including the brew unit and appliance interior.

■ Switch the coffee machine off.

⚠ Danger of burning and scalding at the dispensers.
The liquids and steam dispensed are very hot and can cause scalding.
Keep away from the area underneath the dispensers when hot liquids and steam are being dispensed.
Do not touch hot components.

Coffee

Coffee drinks in detail

You can use the coffee machine to prepare the following coffee-based drinks:

- **Ristretto** is a concentrated, stronger espresso. It is prepared with the same amount of coffee as for an espresso but with a lot less water.
- **Espresso** is a strong aromatic coffee with a thick, hazelnut-brown colored froth – known as the crema – on top. We recommend using espresso-roasted coffee beans to make an espresso.
- **Coffee** differs from espresso by the increased amount of water and the roast of the beans.
  We recommend using coffee beans of the correct roast to make the coffee.
- **Lungo** is a coffee with significantly more water.
- **Long black** is made with hot water and two shots of espresso.
- **Caffè Americano** consists of equal proportions of espresso and hot water. The espresso is made first, then the hot water is dispensed.
- **Cappuccino** consists of approx. 2 thirds milk froth and 1 third espresso.
- **Latte macchiato** consists of 1 third each of hot milk, milk froth, and espresso.
- **Caffè latte** consists of espresso and hot milk.
- **Cappuccino Italiano** has the same proportions of milk froth and espresso as a cappuccino. The difference is that the espresso is added first and then the milk froth.
- **Espresso macchiato** is an espresso with a small amount of milk froth on top.
- **Flat white** is a special variety of cappuccino that contains significantly more espresso than milk froth for an intensive coffee aroma.
- **Café au lait** is a French style of coffee consisting of coffee and milk froth. Café au lait is usually served in a bowl.

Hot milk and **milk froth** can also be made.

Milk and milk alternatives

Cow's milk or alternative plant-based dairy products (e.g., soy milk) containing added sugar can clog up the milk pipe and the rest of the milk pipework. Residues from unsuitable liquids can interfere with milk preparation.
The milk used must not contain any additives.

Dairy milk naturally contains bacteria.
If using dairy milk, make sure that it has been pasteurized, e.g., pasteurized cow's milk.

You can prepare hot milk and milk froth using cow's milk or alternative plant-based dairy products. However, the

consistency of the milk froth will vary greatly depending on the type of milk used. Not all types of milk are suitable for milk froth.

Once the appliance has heated up, the milk will be drawn up into the central spout where it is heated by steam and also frothed for drinks requiring milk froth.

Tip: Using cold cow's milk (< 50°F/ 10°C) with a protein content of at least 3% will produce the perfect milk froth. You can select milk with a fat content according to your personal preference. With whole milk (at least 3.5% fat), the milk froth will be slightly creamier than with low-fat milk.

Alternative plant-based dairy products – hereafter referred to as "alternative dairy products" – contain different ingredients than cow's milk, for example. Due to natural settling, dairy products tend to thicken. When preparing hot milk or milk froth, this thicker consistency can prevent the alternative dairy products from being drawn into the milk pipework.

Stir alternative dairy products well immediately before preparation.

Do not shake alternative dairy products. Shaking causes foam to form in the packaging and impairs the preparation process.

Tip: Rinse the milk pipework manually immediately after preparation.

Filling and inserting the milk flask

Milk is **not** cooled in the milk flask.

Milk may spoil if it is left in the milk flask for an extended period without being cooled (depending on the type of milk).

In particular, do not leave cow's milk in the milk flask for an extended period without cooling it.

Please follow the manufacturer's instructions regarding the shelf life of the milk used.

If you have not made any milk drinks for a while, rinse the milk pipework thoroughly before making the first drink.

Tip: For high-quality milk froth, always use cold milk (< 50°F/10°C).

- If you use alternative dairy products, make sure that you stir it well. To ensure the best preparation, alternative dairy products must be stirred and not shaken.
- Fill the milk flask with milk up to a maximum of 3/4" (2 cm) below the rim.
- Seal the milk flask with the lid.

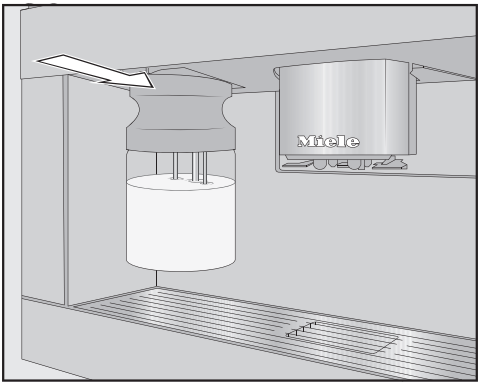

- Push the milk flask back into the coffee machine until it clicks into place.

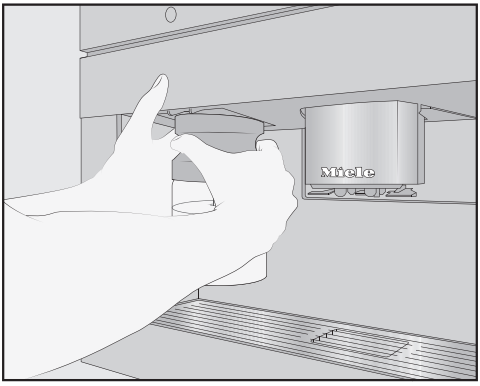

Tip: It is easier to remove the milk flask with both hands.

Making a coffee drink

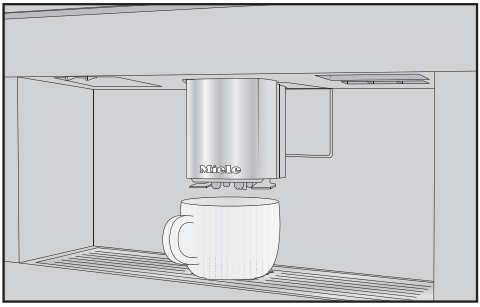

- Place a cup under the central spout.
- If you want to make a coffee with hot milk or milk froth, prepare the milk flask and insert it into the appliance.
- Tap the sensor control for the drink you want.

The drink you have selected will be dispensed from the central spout into your cup.

Canceling a drink

- Tap the lit orange symbol on the control panel again.

When preparing drinks with several ingredients (e.g., latte macchiato), you can cancel each of the individual components prematurely.

- When Stop appears in the display, confirm with *OK*.

DoubleShot

Select the DoubleShot function if you would like a particularly strong and aromatic coffee. In this case, more coffee beans will be ground and brewed halfway through brewing.

The shorter extraction time means that fewer unwanted aromas and bitter compounds will be released.

DoubleShot can be activated for all drinks apart from “Ristretto” and “Long black”.

Making a DoubleShot ⌀ of coffee

- Touch the ⌀ sensor button immediately before or after you start making a drink.

Dispensing starts and the ⌀ sensor button lights up. 2 portions of coffee beans will be ground and brewed.

Making 2 portions ⧉

You can dispense 2 portions of a drink into 1 large cup or into 2 cups at the same time.

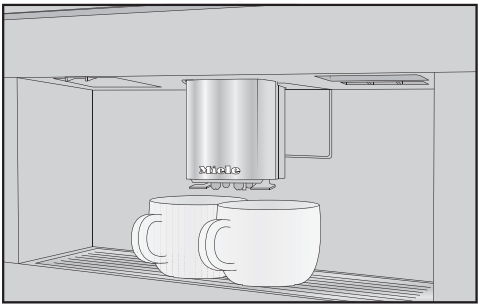

- Place a cup under each of the dispensing spouts in the central spout.
- Tap the ⧉ sensor control immediately before or after you start making a drink.

The ⧉ sensor control lights up.

Dispensing starts and 2 portions of the desired drink will be dispensed.

Preparing a pot of coffee

You can make several cups of coffee one after the other automatically with the Coffee Pot function (maximum of 1 L).

The drinks menu is displayed.

Tip: Make sure that the bean and water containers have enough beans and water inside them before starting the Coffee Pot function.

- Place a sufficiently large container under the central spout.
- Touch the ⧉ sensor control.
- Select Coffee Pot.
- Confirm with *OK*.
- Select the number of cups you want (3 to 8).

Each portion of coffee will be ground, brewed, and dispensed individually. You can follow the process on the display.

Canceling a drink

- Touch the ⧉ sensor control.

Tea

If the dispensing temperature is too high or too low or if the brewing time is too short or too long, this can affect the flavor of your tea.

Follow the instructions provided by the manufacturer of the tea you are making.

The coffee machine is not intended for commercial or scientific purposes. Dispensing temperatures given are approximate and can vary according to ambient conditions. A temperature increment of approximately 4°F (2°C) makes a noticeable difference.

When making tea, you can select from the following options:

- **Japanese Tea** is a high-quality green tea which boasts a fine, fresh, “green” taste.

Dispensed temperature: approx. 150°F (65°C), brewing time: approx. 1.5 minutes

- **White Tea** is a green tea where only the young buds of the tea plant are used and processed very gently. White tea has a particularly mild taste. Dispensed temperature: approx. 160°F (70°C), brewing time: approx. 2 minutes
- **Green Tea** gets its green color from the leaves of the tea plant. The tea leaves are either roasted or steamed depending on the region. Green tea can be infused multiple times. Dispensed temperature: approx. 175°F (80°C), brewing time: approx. 2.5 minutes
- **Black Tea** gets its dark color and characteristic taste from the fermentation of tea leaves. Black tea can be enjoyed with a little lemon or milk. Dispensed temperature: approx. 210°F (97°C), brewing time: approx. 3 minutes
- **Chai Latte** has its origins in traditional Ayurveda medicine as a black tea with typically Indian spices and milk. The milk mellows the spices and tops off the flavor experience. Dispensed temperature: approx. 210°F (97°C), brewing time: approx. 3 minutes
- **Herbal Tea** is an aromatic infusion drink made up of dried leaves or fresh parts of plants. Dispensed temperature: approx. 210°F (97°C), brewing time: approx. 8 minutes
- **Fruit Tea** is made from dried pieces of fruit and/or parts of plants, e.g., rose hip. The taste of the drink varies according to which plants are used and how they are blended. Lots of fruit teas are also flavored. Dispensed temperature: approx. 210°F (97°C), brewing time: approx. 8 minutes

The preset dispensing temperature varies depending on the type of tea. The respective dispensing temperatures are the ones that Miele recommends for making the types of tea concerned.

Whether you use loose tea leaves, blended tea, or tea bags depends on your own personal preference.

The amount of tea required varies from one type of tea to another. Always follow the recommendations of the manufacturer on the packaging or of the retailer. You can adjust the amount of water according to the type of tea and the size of the cup (see “Changing the portion size”).

Making tea

Tap the ☕ sensor control to access the menu containing the various types of tea.

The drinks menu is displayed.

- Pour loose tea into a tea filter or similar or take a tea bag out of the packet.
- Place the tea filter or the tea bag in the tea cup.
- Place the tea cup under the central spout.
- Tap ☕.
- Select the type of tea you would like.
- Confirm with *OK*.

Hot water will be dispensed into the cup.

If the TeaTimer | Automatic setting has been selected, the kitchen timer for the brewing time will start automatically.

Alternatively, you can also start the TeaTimer function manually at this point.

After the brewing time has elapsed, an audible signal will sound and the 🔔 symbol is no longer displayed. The TeaTimer has elapsed.

- Now remove the tea leaves or the tea bag.

Starting the TeaTimer manually

- Prepare a cup of tea.

TeaTimer appears in the display as soon as the water has been dispensed.

- Tap *OK*.

The editor opens with a suggested brewing time.

- Change the brewing time if required.
- Confirm with *OK*.

After the brewing time has elapsed, an audible signal will sound and the 🔔 symbol is no longer displayed. The TeaTimer has elapsed.

- Now remove the tea leaves or the tea bag.

Preparing a pot of tea

The Tea Pot function allows you to make a large quantity of tea (maximum of 1 L). The type of tea selected determines the preset temperature.

The drinks menu is displayed.

Tip: Make sure that the water container has enough water inside it before starting the Tea Pot function.

- Place a sufficiently large container under the central spout.
- Tap the ☕ drinks sensor control.
- Select Tea Pot.
- Select the type of tea and number of cups you want (3 to 8).

Canceling a drink

- Touch the ☕ sensor control.

Dispensing warm or hot water

You can choose between the following options:

- Hot water at approx. 195°F (90°C)
- Warm water at approx. 150°F (65°C)

The drinks menu is displayed.

- Place a suitable container under the central spout.
- Tap the ⧉ sensor button.
- Choose between warm or hot water.
- Confirm with *OK*.

Dispensing will start.

The Expert Mode function allows you to change the portion size while the drink is being made. The setting will **not** be saved and will only apply to the current drink.

Switching Expert mode on and off

The drinks menu is displayed.

- Touch the sensor control.
- Select Settings | Expert Mode.
- Select the option you want.
- Confirm with *OK*.

The setting is now saved.

Expert mode: changing the portion size

The drinks menu is displayed.

> The portion size can only be changed during the individual preparation stages.
>
> If you select DoubleShot or 2 portions, Expert mode cannot be used to change the portion size.

- Select a drink.

Dispensing will start. You can adjust the portion size while it is being dispensed, e.g., individually change the amount of hot milk, milk froth, and espresso for a latte macchiato.



- Move the indicator (small triangle) across the navigation area according to the portion size you want.

Grinder setting

The grinder setting determines the contact time between the ground coffee and the water, known as the extraction time. Only when the ideal grinder setting is selected can the machine dispense a perfect cup of coffee with a fine, hazelnut-brown crema.

Identifying the ideal grinder setting

There are various ways to tell whether the coffee grinder is set correctly.

The grinder setting is **too coarse** if the coffee or espresso is watery and tastes acidic. The crema is very pale.

The grinder setting is **too fine** if the coffee or espresso tastes too bitter and the crema is dark brown.

If the grinder setting is adjusted by more than one level, the grinder may be damaged.

Only adjust the grinder one setting at a time.

Each time you adjust the setting, start making a new drink so that the beans are ground. Adjust the grinder setting one setting at a time again.

The slide control for adjusting the fineness is located on the top left behind the water container.

- Open the appliance door.
- Remove the water container.

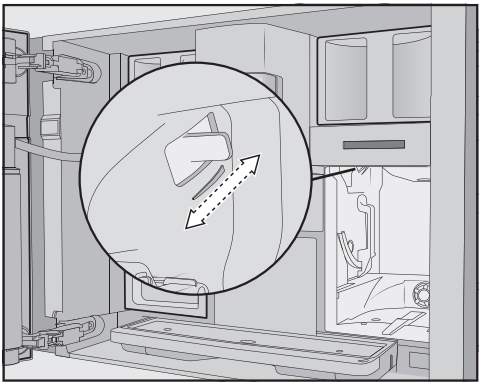

- Push the slide control **exactly 1 setting** forward (for finer grinding) or one setting backward (for coarser grinding).

The grinder setting you select will be used for all types of beans and coffee drinks.

- Put the water container back in place.
- Close the appliance door.
- Make one cup of coffee.

After this, you can adjust the grinder setting again.

The grinder will naturally wear out slightly over time. Set the grinder to a finer setting if necessary.

Amount of coffee

The coffee machine can grind and brew 7.5–12.5 g of coffee beans per cup. The greater the amount, the stronger the coffee.

The amount of coffee is **too low** if the espresso or coffee lacks body.

Increase the amount of coffee to brew more ground coffee.

The amount of coffee is **too high** if the espresso or coffee tastes bitter.

Decrease the amount of coffee to brew less ground coffee.

Pre-brewing ground coffee

When the pre-brewing function is turned on, the ground coffee is first moistened with a little hot water. The ground coffee swells a little.

Then the remaining water is forced through the moistened coffee at high pressure. If your coffee tastes too bland and you want too add some spice and richness, try the "Pre-brewing" function. Depending on the type of coffee used, pre-brewing can intensify the taste.

You can set a short or long duration for pre-brewing or turn the "Pre-brewing" function off completely.

Tip: It is particularly recommended to use the "Pre-brewing" function to make coffee.

Brewing temperature for coffee drinks

The brewing temperature must be adapted to the roast of the beans you are using. This is crucial whether you are making espresso or coffee.

Several types are sensitive to high brewing temperatures, resulting in an impaired taste. If your coffee tastes bitter, the brewing temperature you have selected might be too high.

Espresso is usually brewed at higher temperatures.

Dispensing temperature for tea drinks, warm water, and hot water

You can adjust the dispensing temperatures used for the individual tea drinks and for the warm and hot water by customizing the brewing temperature.

A temperature increment of approximately 35°F (2°C) makes a noticeable difference.

Portion size

The flavor of the coffee produced depends not only on the type of coffee, but also on the amount of water used. You can program the amount of water for all drinks (apart from the Coffee Pot function) to suit the size of your cups and/or the type of coffee you are using.

For coffee drinks that use milk, you can also set the amount of milk or milk froth to be dispensed with these drinks, as well as the amount of coffee or espresso.

A maximum portion size can be programmed for each type of drink. Dispensing stops once this has been reached. The maximum possible portion size is then saved by the appliance for this type of drink.

Displaying and changing parameters

You can change the portion size for all drinks.
In addition, you can set the amount of coffee, brew temperature, and pre-brewing parameters for each coffee drink individually.

- Touch the ⚙ sensor control.
- Select a drink.
- Confirm with *OK*.

The parameters that can be changed for this drink are displayed.

Once you have selected a drink, the current settings for the following appear: Amount of coffee, Brew temperature, and Pre-brewing.

> The Portion size menu option is displayed in the first line. If you select Portion size and confirm with *OK*, the drink will be dispensed immediately.

- Select the parameter you want.
- Change the setting as required.
- Confirm with *OK*.

The setting is now saved.

Changing the portion size

You can change the portion size in Expert mode for the current drink or on a permanent basis. If you want to change the portion size of the drink permanently, change the Portion size parameter.

- Place a cup under the central spout.
- Tap ⚙.
- Select a drink.
- Confirm with *OK*.

The parameters that can be changed for this drink are displayed.

- Select Portion size.
- Confirm with *OK*.

The required drink will now be made. As soon as the minimum amount has been made, Save will be shown on the display.

- When the container is filled to the desired level, tap *OK*.

If you want to change the portion size for coffee with milk, the ingredients of the drink are saved one after the other during preparation.

- When the quantity for each ingredient reaches the desired level, tap *OK*.

The programmed portion size will now be dispensed every time that particular drink is selected.

Tip: For the drinks pictured on the control panel, you can change the portion size by pressing and holding the button down. To do this, keep the drinks button pressed until the machine starts dispensing. As soon as the minimum amount has been made, Save will be shown on the display.

> If the water container becomes empty while making a drink, the coffee machine will stop programming the portion size. The new portion size will **not** be saved.

Profiles

In addition to the Miele drinks menu (Miele profile), you can create individual profiles to cater for different tastes and preferences.

Within the profile, you can adjust the portion sizes and parameters individually for all drinks.

Creating a profile

■ Touch the sensor control.

The Profiles menu opens.

■ Select Create profile.

■ Confirm with *OK*.

The editor will open in the display.

■ Enter the profile name:

- To enter a character, highlight the one you want and confirm your choice with *OK*.
- To delete a character, tap the ⮌ sensor control.
- To save the name, select the checkmark ✓ and confirm with *OK*.

The profile is created.

Changing drinks within a profile

When you change the parameters of a drink within a profile, these settings only apply to the active profile. The settings for drinks contained within other profiles remain unaffected.

■ Touch the sensor control.

The Profiles menu opens.

■ Select the profile you want.

The name of the selected profile is shown in the top left of the display.

You can now change the drinks individually.

Making drinks stored in a profile

■ Tap the sensor button.

■ Select the profile you want.

■ Select the drink you want.

The machine starts dispensing the drink.

Processing a profile

Once you have your own profiles, you can edit the profiles in the Profiles menu.

■ Touch the sensor control.

The Profiles menu opens.

■ Select Edit.

■ Confirm with *OK*.

You can now edit the following settings for the selected profile:

- Setting when the profile should change
- Changing the profile name
- Deleting the profile

Setting when the profile should change

■ Touch the sensor control.

The Profiles menu opens.

■ Select Edit.

■ Confirm with *OK*.

■ Select Change profile.

■ Confirm with *OK*.

You have the following options:

- **Manual**: The selected profile will remain active until you select another one.
- **After each use**: The machine will revert to the Miele profile whenever a drink is dispensed.
- **When turned on**: The Miele profile will be displayed whenever the coffee machine is switched on, regardless of which profile was selected before the machine was last switched off.

■ Select the option you want.

■ Confirm with *OK*.

Changing the profile name

This option can only be selected if a profile has been allocated in addition to the Miele standard profile.

■ Touch the sensor control.

The Profiles menu opens.

■ Select Edit.

■ Confirm with *OK*.

■ Select Change name.

■ Confirm with *OK*.

■ Change the name as required:

- To delete a character, tap the ⮌ sensor control.
- To enter a new character, highlight the one you want and confirm your choice with *OK*.
- Select the checkmark ✓ to save the modified name.

■ Confirm with *OK*.

Deleting the profile

This selection is only possible if a user profile has been allocated in addition to the Miele standard user profile.

■ Touch the sensor control.

The Profiles menu opens.

■ Select Edit.

■ Confirm with *OK*.

■ Select Delete profile.

■ Confirm with *OK*.

■ Select the profile you wish to delete.

■ Select Yes.

■ Confirm with *OK*.

The profile will be deleted.

Preparing MobileStart

⚠ Danger of burning and scalding at the spouts.
If liquids or steam are dispensed while the machine is unsupervised, persons may burn themselves if they place body parts under the central spout or touch hot components.
Ensure that no one, especially children or pets, can be harmed if the machine is operated without supervision.

Milk is **not** cooled in the milk flask or in a milk carton.
Milk may spoil if it is left in the milk flask or carton for an extended period without being cooled (depending on the type of milk).
In particular, do not leave cow's milk in the milk flask or carton for an extended period without cooling it.
Please follow the manufacturer's instructions regarding the shelf life of the milk used.

With Mobile Start, you can start making a drink, for example, via the Miele app.

- Make sure that the coffee machine is ready to use – for example, check that the water container and bean container are sufficiently filled.
- Place a sufficiently large, empty cup under the central spout.
  You will only be able to use Mobile Start if:

- Miele@home has been set up for your coffee machine and
- the Remote control and Mobile Start functions have been switched on.

You can then make drinks via the app.

Switching MobileStart on and off

To use Mobile Start, the Remote control function must be switched on.

The drinks menu is displayed.

- Touch the ▭ sensor control.
- Select Mobile Start.
- Select the option you want.
- Confirm with *OK*.

As soon as you have switched on Mobile Start, you can start making a drink via the app.

If you are making a drink via the app, you will be notified when the drink is being dispensed via audible and visual signals. These warning signals cannot be changed or switched off.

While Mobile Start is switched on, the display shows the 📱 symbol and, when the coffee machine is switched off, the time of day. Activation rinsing is not carried out, meaning that the cup under the central spout is not filled with rinse water.
If the coffee machine is being operated manually, it cannot be operated via the app. Operation on the appliance takes precedence.
After 24 hours, if you have made a drink or opened the appliance door, Mobile Start is automatically switched off.

Settings

You can use the “Settings” menu to customize the coffee system to suit your individual requirements.

Displaying and changing Settings

The drinks menu is displayed.

- Tap the ▭ sensor control.
- Select Settings ⚑.
- Confirm with *OK*.
- Select the menu option that you want to display or change.
- Confirm with *OK*.
- Change the setting as required.
- Confirm with *OK*.

Some settings which can be found in the Settings menu are described in separate sections of the operating instructions.

Language

You can select the language and, if applicable, your location for all display text.

Tip: If you select the wrong language by mistake, you can find the Language option again via the ⚑ symbol.

Time

Display (time display)

Select how you want the time of day to show in the display when the coffee machine is switched off:

- **On**: The time is always visible in the display.
- **Off**: The time is not visible in the display.
- **Night dimming**: To save energy, the time is displayed from 5:00 am to 11:00 pm only.

When the time of day display is switched on, the energy consumption of the coffee machine increases.

Clock format

- 24-hour display (24 h)
- 12-hour display (12 h)

Setting

Set the hours and the minutes.

If the coffee machine has been connected to a Wi-Fi network and signed into the Miele app, the time will be synchronized based on the location setting in the Miele app.

Date

Set the date.

Timer

The coffee machine has 3 timers:

- Turn on at
- Turn off at
- Off after

You can allocate the individual timer functions to different days of the week.

On at

The coffee machine switches on at a particular time, e.g., in the morning for breakfast.

The coffee machine will **not** switch on at the required time if you have activated the system lock.
The timer settings are deactivated.

Once the coffee machine has come on automatically **three times** at the set time without any drinks being dispensed, it will stop switching on automatically. This prevents the coffee machine from switching itself on unnecessarily, for example, while you are on vacation.
The programmed times will, however, remain in memory and will be reactivated after manually switching the machine on again.

If you have set the time to be displayed while the machine is turned off (Show | On or Night dimming), the ⏲ symbol and the desired switch-on time will appear in the display 23:59 hours beforehand.

Off at

The coffee machine switches off at a particular time.

In the event of a longer absence, the programmed times will remain in the memory and will be reactivated when the machine is next switched back on manually.

Off after

The coffee machine switches off after a particular length of time if no sensor controls have been pressed.

You can change this to another time between 20 minutes and 9 hours.

By default, the coffee machine switches off after 20 minutes. Extending this time increases the energy consumption of the coffee machine.

TeaTimer

You can use the TeaTimer function to start a kitchen timer when making tea. There is a preset brewing time for the type of tea selected. You can adjust the preset brewing time (up to a maximum of 14:59 minutes).

You can set the TeaTimer as follows:

- **Automatically**: The TeaTimer starts automatically once the water has been dispensed.
- **Manual**: You have the option of starting the TeaTimer once the water has been dispensed.

While the brewing time is counting down, you can continue to use the coffee machine as normal. After the brewing time has elapsed, an audible signal will sound and the 🔔 symbol will flash.

Volume

You can set the volume of the audible signal and keypad tones (segment bar).

The welcome melody that plays when you tap the On/Off button ⏻ can be switched on or off.

Display brightness

You can set the display brightness (segment bar).

Lighting

You can change the brightness of the lighting while the coffee machine is switched on or off.

You can also specify how long the lighting should stay on for when the machine is switched off (adjustable between 15 minutes and 9 hours).

The brighter the lighting is set and the longer it is switched on, the higher the energy consumption of the coffee machine.

Info (display information)

You can display the number of drinks dispensed so far and how many more can be dispensed until the maintenance programs have to be run.

Fresh water

The machine is intended to be plumbed into the water supply. Fresh water is automatically taken into the water container when the plumbed water connection is on. If it is switched off, you must fill the water container manually.

Altitude

If the coffee machine is installed at high altitudes, the lower air pressure will cause the water to boil at a correspondingly lower temperature.

You can set the local altitude to ensure the ideal drink preparation temperatures.

Performance Mode

You can select the appropriate Performance mode for how you use your appliance:

- Eco mode
- Barista mode
- Latte mode

There is also a mode for occasional, intensive use of the coffee machine: the Party mode.

Eco Mode

In Eco mode, the coffee machine consumes the least amount of energy. The system does not heat up until someone starts making a drink.

Eco mode is set by default. Selecting a Performance mode other than Eco mode increases the energy consumption of the coffee machine.

Barista Mode

This Performance mode has been optimized for unadulterated coffee enjoyment. Users can enjoy coffee-based drinks without any delay as the coffee machine remains heated to the brewing temperature.

Barista Mode consumes more energy than Eco mode.

Latte Mode

This Performance mode has been optimized for preparing milk. In Latte Mode, milk-based drinks can be prepared within a much shorter space of time.

Latte Mode consumes more energy than Eco mode and Barista Mode.

Party Mode

This Performance mode has been configured for the **occasional** intensive use of the coffee machine, e.g., for family get-togethers.

Clean the coffee machine thoroughly after intensive use, particularly the milk pipework.

It may be necessary to descale the coffee machine and degrease the brew unit.

Please note the following information about Party mode:

- The general pipework is rinsed much less frequently or not at all. The milk pipework is not rinsed until around 1 hour after milk was last dispensed.
- Cleaning status messages or cleaning prompts are suppressed and delayed until the appliance is next switched on.
- The cup light remains permanently switched on at the maximum brightness level for as long as the coffee machine stays switched on.
- The Turn off at and Turn off after timers are deactivated.
- The coffee machine switches off 6 hours after the last sensor control was pressed. The next time the appliance is switched back on, Party mode is switched off and the most recently set Performance mode is switched back on.

Party mode consumes more energy than other Performance modes.

Water hardness

Program the coffee machine to the water hardness level of your area so that it functions correctly and does not get damaged.

Your local water authority will be able to tell you the hardness of the water in your area.

If you are using bottled drinking water, e.g., mineral water, select settings according to the calcium content. The calcium content is given on the label of the bottle in mg/l Ca^{2+} or ppm (mg Ca^{2+}/l).

Do not use carbonated water.

The hardness level is set to 21.8 gpg (21°dH) by default.

Water hardness		Calcium content mg/l Ca^{2+} or ppm (mg Ca^{2+}/l)	Setting
°dH	gpg		
1	1	7	1
2	2	14	2
3	3	21	3
4	4	29	4
5	5	36	5
6	6	43	6
7	7	50	7
8	8	57	8
9	9	64	9
10	10	71	10
11	11	79	11
12	12	86	12
13	14	93	13
14	15	100	14
15	16	107	15
16	17	114	16
17	18	121	17
18	19	129	18
19	20	136	19
20	21	143	20
21	22	150	21
22	23	157	22
23	24	164	23
24	25	171	24
25	26	179	25
26	27	186	26
27	28	193	27
28	29	200	28
29	30	207	29

Water hardness		Calcium content mg/l Ca^{2+} or ppm (mg Ca^{2+}/l)	Setting
°dH	gpg		
30	31	214	30
31	32	221	31
32	33	229	32
33	34	236	33
34	35	243	34
35	36	250	35
36	37	257	36
37–45	38–47	258–321	37–45
46–60	48–62	322–429	46–60
61–70	63–73	430–500	61–70

Tip: If your water hardness is > 21.8 gpg (21°dH), we recommend using bottled drinking water instead (< 150 mg/l Ca^{2+}). This will mean your coffee machine will need to be descaled less often and there will be less impact on the environment because less descaling agent will be used.

System lock

You can lock the coffee machine to prevent it from being used by unauthorized persons, such as children.

When the system lock is activated, the settings for the Turn on at timer are deactivated. The coffee machine will **not** switch on at the time set.

Temporarily deactivating the system lock

■ Press and hold *OK* for 6 seconds.

The system lock is reactivated when the coffee machine is next switched off.

Miele@home

The coffee machine is equipped with a Wi-Fi module and enabled for Miele@home.

Depending on whether you have connected the coffee machine to your network or not, the following options are displayed under Miele@home:

- **Set up**: This option only appears if the coffee machine has never been connected to a Wi-Fi network or if the network configuration has been reset.
- **Deactivate***/**Activate***: The settings for the Wi-Fi network are retained, but the network is switched on or off.
- **Connection status***: Information about the Wi-Fi connection is displayed. The symbols indicate the strength of the connection.
- **Set up again***: The settings for the current Wi-Fi network will be reset. The Wi-Fi connection will be set up again.
- **Reset***: Networking is switched off and the settings for the current Wi-Fi network will be reset.

* This menu option appears if Miele@home has been set up and the coffee machine has – where applicable – been connected to a Wi-Fi network.

Tip: When the coffee machine is ready for operation, you can start networking it at any time by touching and holding the *OK* sensor control or by scanning the QR code in these operating instructions (see “Performing Scan & Connect”).

Networking increases the energy consumption of the coffee machine, even if it is switched off.

The network configuration should be reset whenever the coffee machine is being disposed of or sold, or if a used coffee machine is being put into operation. This is the only way to ensure that all personal data has been removed and the previous owner will no longer be able to access the coffee machine.

Performing Scan & Connect

Initial commissioning has been carried out without Miele@home having been set up.

- Scan the QR code.

If you have installed the Miele app and have a user account, you will be taken directly to the networking steps.

If you have not yet installed the Miele app, you will be taken to the Apple App Store® or the Google Play Store™.

- Install the Miele app and set up a user account.
- Scan the QR code again.

The Miele app will guide you through the setup process.

Remote control

The Remote control menu option appears if Miele@home has been set up and the coffee machine has been connected to a Wi-Fi network.

You can change the coffee machine settings, for example, in the Miele app when remote control is switched on. To start making a drink via the app, MobileStart also needs to be activated.

The remote control function is switched on by default.

RemoteUpdate

The RemoteUpdate function allows the software on your coffee machine to be updated. If an update is available for your coffee machine, it will automatically download it. Updates will not be installed automatically. They must be initiated manually.

If you do not install an update, you can continue to use your coffee machine in the usual way. However, Miele recommends installing updates.

The RemoteUpdate menu option is only displayed and can only be selected if the requirements for using Miele@home have been met.

The RemoteUpdate function is activated by default. Available updates will be downloaded automatically but will only be installed if you initiate installation manually.

Deactivate RemoteUpdate if you do not want any updates to be downloaded automatically.

Running a RemoteUpdate

Information about the content and scope of an update is provided in the Miele app.

A message will appear in your coffee machine display if an update is ready for installation.

You can install the update immediately or postpone this until later. You will be reminded about the update the next time you switch the coffee machine on.

Deactivate RemoteUpdate if you do not want to install the update.

The update may take several minutes.

Keep in mind the following with respect to RemoteUpdates:

- You will only receive a message when a RemoteUpdate is available.
- Once a RemoteUpdate has been installed, it cannot be undone.
- Do not switch the coffee machine off during the update. Otherwise, the update will be aborted and will not be installed.
- Some software updates can only be carried out by Miele Service.

Software version

The “Software version” menu option is intended for Miele Technical Service. You do not need this information for domestic use.

Showroom program (Demo mode)

Do not activate this setting for domestic use.

The Demo Mode | Demo Mode function enables the coffee machine to be demonstrated in shops or showrooms. In this mode, the machine lights up but no drinks can be prepared and no maintenance programs can be run.

You can activate demo mode without commissioning the appliance for the first time. Switch the coffee machine on and off again. Press the ⮌ / *Back* button for 5 seconds straight away. Demo mode is activated.

Factory default settings

You can reset the coffee machine to its factory default settings.

The following will **not** be reset:

- The number of drinks and the machine status (No. of portions until machine needs descaling, ... degreasing the brew unit)
- Language
- Time and date
- Profiles and the associated drinks
- Miele@home

⚠ Risk to health due to inadequate cleaning.
Heat and moisture inside the coffee machine can cause coffee residues to become moldy and/or milk residues to go off and pose a risk to health.
Carefully clean the coffee machine regularly.

Overview of cleaning intervals

Recommended frequency	What do I have to clean/maintain?
Daily (at the end of the day)	Milk flask and lid
	Milk valve
	Water container
	Drip tray cover
	Drip tray and grounds container
Once a week (more often if heavily soiled)	Central spout
	Cup rim sensor
	Interior
	Brew unit
	Drip tray
	Appliance front
Once a month	Milk valve
	Bean container
Once a year (more often if required)	Grease the brew unit (with silicone grease)
As and when required/after prompt appears in display	Clean the milk pipework (with 2 cleaning sticks)
	Degrease the brew unit (with 1 cleaning tablet)
	Descale the appliance (with 2 descaling tablets)

Clean by hand or in dishwasher

The brew unit is **not** dishwasher safe. Only clean the brew unit by hand with warm water. **Do not use any cleaning agents**.

The following components must be cleaned **by hand only**:

- Central spout stainless steel cover
- Brew unit
- Bean containers and lids

⚠ Risk of damage as a result of excessively high dishwasher temperatures.
Components may be ruined (e.g., may become warped) if washed in a dishwasher at temperatures higher than 130°F (55°C).
For dishwasher-safe components, always select dishwasher programs with a maximum temperature of 130°F (55°C).

Contact with natural dyes, such as those found in carrots, tomatoes, and ketchup, may discolor the plastic parts in the dishwasher. This discoloration does not affect the stability of the parts.

The following parts are **dishwasher-safe**:

- Drip tray, lid, and grounds container
- Drip tray cover
- Central spout (without stainless steel cover)
- Milk flask with lid
- Cup sensor
- Maintenance container
- Water container

⚠ Danger of burning and scalding on hot components or by hot liquids.
Components can become very hot during operation. Touching hot components can cause burning. The liquids and steam dispensed are very hot and can cause scalding.
Keep away from the area underneath the dispensers when hot liquids and steam are being dispensed.
Always allow the coffee machine to cool down before cleaning it.
Please be aware that water in the drip tray can also be very hot.

⚠ Risk of damage due to moisture ingress.
The steam from a steam cleaning appliance could reach electrical components and cause a short circuit.
Do not use a steam cleaner to clean the coffee machine.

It is important to clean the appliance regularly. Milk residues can go off and can block the milk pipe.

Unsuitable cleaning agents

Contact with unsuitable cleaning agents can alter or discolor the external surfaces. All surfaces are susceptible to scratching. Scratches on glass can lead to breakage in some circumstances.
Remove any residual cleaning agent immediately. Make sure you remove any spillages or splashes of descaling agent immediately.

To avoid damaging the surfaces of your appliance, do not use the following cleaning agents:

- cleaning agents containing soda, ammonia, acids, or chlorides
- solvent-based cleaning agents
- disinfectant cleaning agents and hand sanitizer
- cleaning agents containing descaling agents (unsuitable for cleaning the front of the appliance)
- stainless steel cleaners
- dishwasher cleaners (unsuitable for cleaning the front of the appliance)
- glass cleaners
- cleaning agents for glass-ceramic cooktops
- oven cleaners
- steam oven cleaning agents (DG-Clean)
- abrasive cleaning agents, such as scouring powder, scouring cleansers, or pumice stones
- hard abrasive brushes or sponges, such as pot scourers or sponges which have been previously used with abrasive cleaning agents
- eraser sponges
- sharp metal scrapers
- steel wool or stainless steel sponges
- sunscreen

Opening the appliance door

Risk of damage when opening the door if the central spout is too high or too low.

If the central spout is too high or too low, the door cannot be opened. If you try to open the door, the central spout can be damaged.

Make sure that the central spout is in the top or middle position before you open the door.

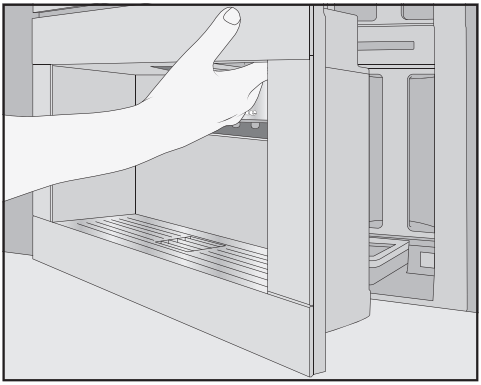

■ Open the appliance door.

Cleaning the drip tray and grounds container

⚠ Danger of burning and scalding on hot components or by hot liquids.

Components can become very hot during operation. Touching hot components can cause burning. The liquids and steam dispensed are very hot and can cause scalding.

If the pipework has just been rinsed, wait a while before removing the drip tray from the coffee machine.

Please be aware that water in the drip tray can also be very hot.

Do not touch hot components.

Clean the drip tray and grounds container **every day** to avoid unpleasant smells and mold fungi.

A prompt will appear in the coffee machine display when the drip tray and/or the grounds container is full and needs to be emptied. Empty the drip tray **and** the grounds container. It is not necessary to take the lid off the drip tray in order to empty it.

- Open the appliance door.

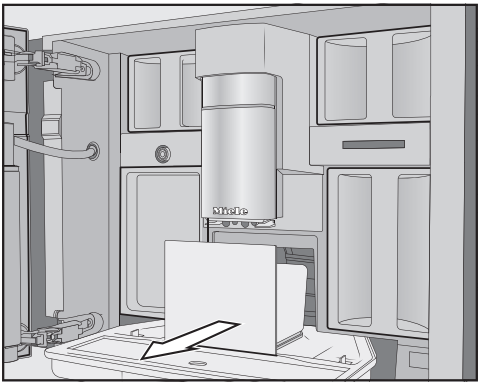

- Remove the drip tray and grounds container from the machine.
- Empty the grounds container after removing it from the drip tray.

The grounds container may contain a small amount of water from rinsing as well as the leftover coffee grounds.

Taking the drip tray apart

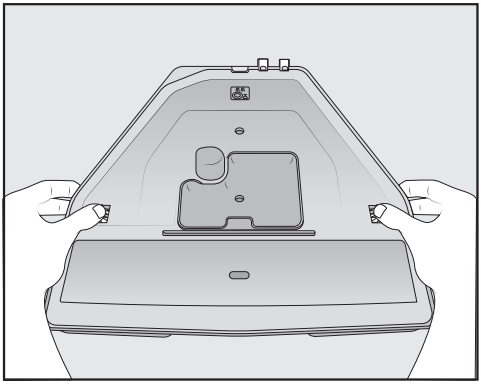

The orange clips are not removable.

- Take the lid off the drip tray as follows: press the orange clips outward on both sides to release the lid.
- Remove the lid.
- Clean the drip tray, lid, and grounds container by hand using warm water and a little liquid dish soap.
- Dry all parts.

Tip: To give the drip tray, lid, and grounds container an extra thorough clean, clean them in the dishwasher from time to time. If the drip tray is heavily soiled, clean it with a brush before placing it in the dishwasher.

- Clean the drip tray recess inside of the coffee machine.

Cleaning the contacts on the drip tray

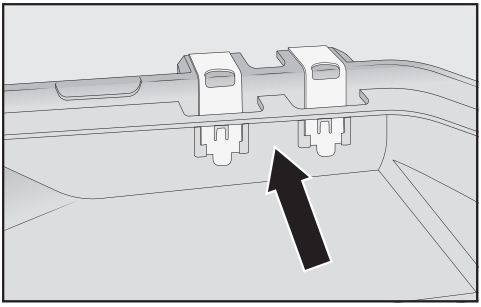

- Clean the contacts (metal discs) and the space between them carefully, e.g., using a brush.
- Dry all parts thoroughly.

The contacts will not be able to detect that the drip tray is full if they are damp or dirty.
Check the contacts and the area around them once a week.

Reassembling the drip tray

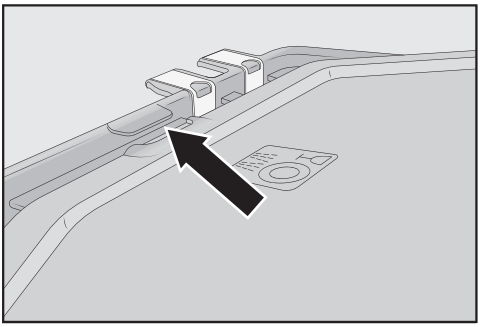

- Attach the drip tray lid as follows: slide the lid under the lug next to the contacts and apply pressure to the lid until the catches at the sides audibly click into place.

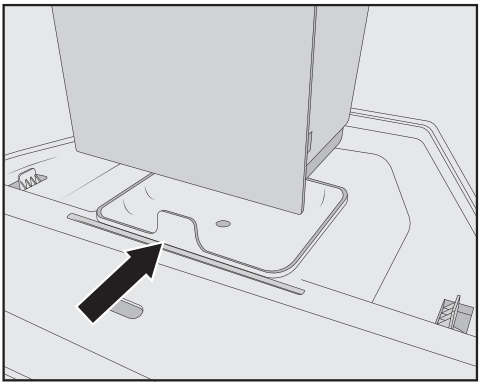

- Place the grounds container on the lid.
- Push the drip tray and grounds container back into the coffee machine.
- Close the appliance door.

Cleaning the drip tray cover

Clean the drip tray cover on a daily basis.

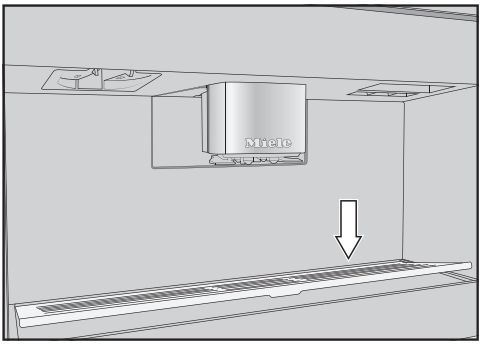

- Remove the drip tray cover as follows: apply pressure to the rear edge so that the cover tips forward and you can remove it easily.
- Clean the drip tray cover by hand using a mild solution of warm water and liquid dish soap.
- Dry the drip tray cover.
- Replace the drip tray cover.

Tip: To give the drip tray cover an extra thorough clean, clean it in the dishwasher from time to time.

Cleaning the water container

Clean the water container every day.

- Open the appliance door.
- Remove the water container.
- Clean the water container every day with a mild solution of warm water and liquid dish soap.
- Rinse the water container thoroughly with clean water to remove any remaining liquid dish soap.
- Dry the outside of the water container.

Tip: To give the water container an extra thorough clean, clean it in the dishwasher from time to time.

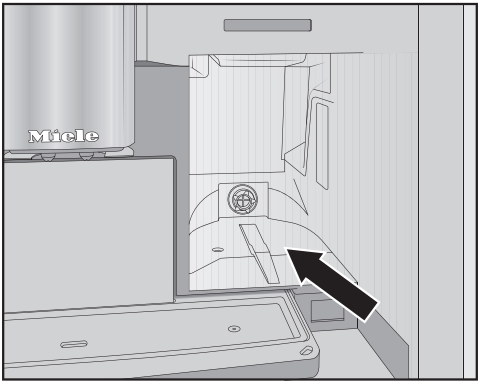

- Clean and dry the surface that the water container sits on.
- Push the water container all the way into the coffee machine until you feel a resistance.
- Close the appliance door.

Cleaning the central spout

Clean the central spout's stainless steel cover by hand only using a mild solution of warm water and liquid dish soap.

Clean all parts of the central spout at least once a week.

Removing the central spout

- Open the appliance door.
- Pull the central spout's stainless steel cover forward to remove it.
- Clean the central spout's stainless steel cover.

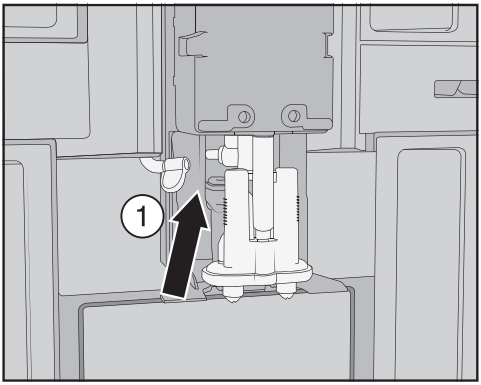

- Detach the milk pipework from the dispensing unit as follows: pull the pull tab ① to the left.

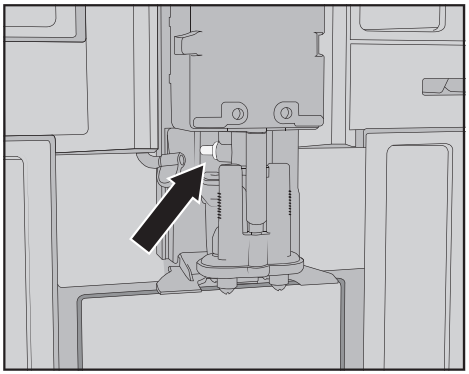

Do **not** remove the milk pipework connecting piece.

If necessary, clean the connecting piece with the cleaning brush.

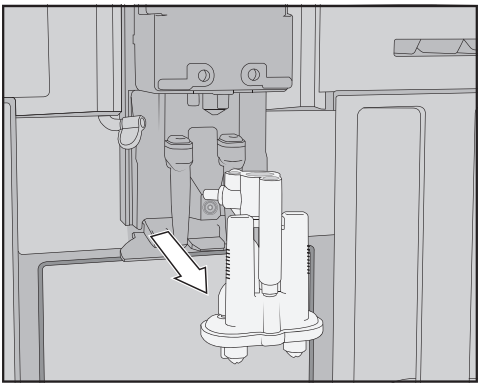

- Grip the dispensing unit by the sides and pull it down to remove it.

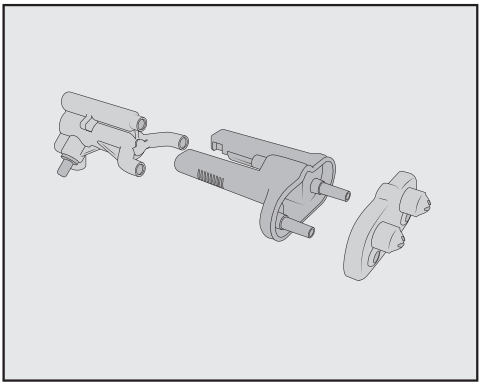

- Take the dispensing unit apart, separating it into 3 components: the Y-piece, the spouts, and the holder.

Cleaning the central spout

Clean the central spout's stainless steel cover by hand only using a mild solution of warm water and liquid dish soap.

- Clean all parts thoroughly by hand.

Tip: With the exception of the stainless steel cover, all parts of the central spout should be cleaned in the dishwasher from time to time to give them a thorough clean. This will remove coffee deposits and milk residues effectively.

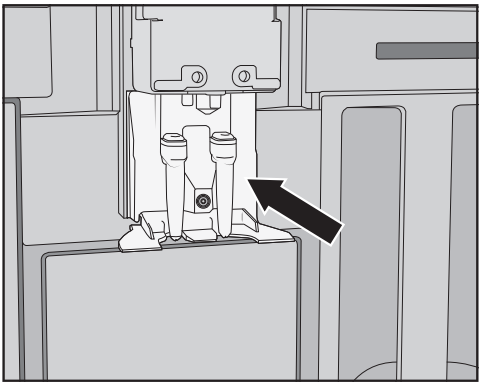

- Clean the area around the central spout with a damp cloth.

Inserting the central spout

The dispensing unit is easier to re-assemble if the individual parts are dampened with water beforehand.

Make sure that all parts are tightly connected to one another.

- Reassemble the dispensing unit.
- Press down firmly so that the spouts become securely connected to the holder.

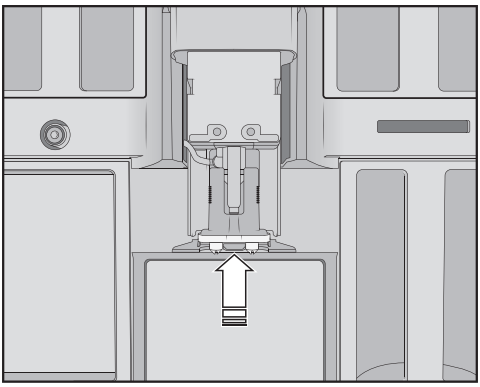

- Slide the dispensing unit into the coffee machine.
- Connect the milk pipework.
- Reinstall the stainless steel cover.
- Close the appliance door.

Fit cover to main dispenser appears in the display.

- Confirm with *OK*.

Cleaning the cup rim sensor

Clean the cup rim sensor at least once a week and more often if heavily soiled.

The cup rim sensor is located under the central spout.

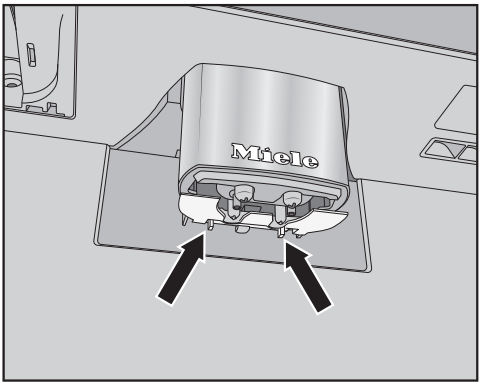

- Press the two catches together (see arrows).

The cup rim sensor is released.

- Clean the cup rim sensor by hand with a mild solution of warm water and liquid dish soap.

Tip: To give the cup rim sensor an extra thorough clean, clean it in the dishwasher from time to time.

- To reinstall the cup rim sensor, press it into the holder on the central spout from below.

Cleaning the milk flask with lid

The milk flask should be taken apart and cleaned every day after use.

Both the lid and the glass flask can be cleaned in the dishwasher, or by hand using a mild solution of warm water and liquid dish soap.

- Remove and empty the milk flask.

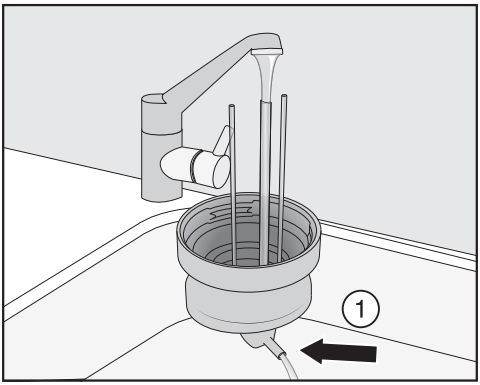

- Rinse the milk pipework in the lid under running water and then place the milk flask lid in the dishwasher.
- If no water runs out of the connecting piece ①, clean it with the cleaning brush.
- Clean the glass flask.
- Dry all parts and especially the threads on the lid and on the glass with a clean cloth.
- Reassemble the milk flask.

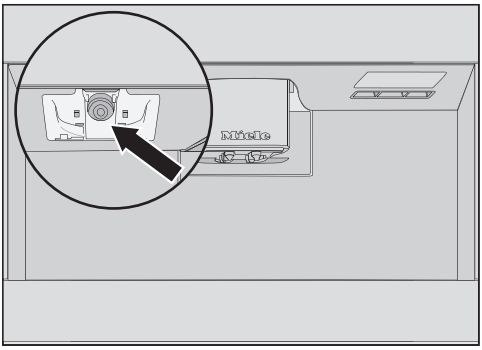

- Clean the milk flask holder on the coffee machine with a damp cloth.

Cleaning the milk valve (daily)

The milk valve seal can be damaged by objects with sharp edges or similar.

Do not use any sharp-edged objects, e.g., knives, to clean the milk valve.

Clean the milk valve every day. If allowed to dry, milk residues can become encrusted on the stainless steel bolt. These crusty deposits are difficult remove. Therefore, it is important to carry out regular cleaning after preparing milk.

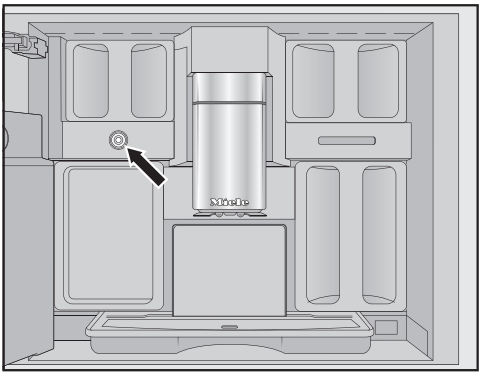

The milk valve is located under the bean container on the left-hand side.

- Open the appliance door.
- Clean the milk valve with a damp cloth/microfiber cloth.
- Close the appliance door.

Cleaning the milk valve (once a month)

Only remove the milk valve when the coffee machine is switched off. Do **not** switch on the coffee machine while the milk valve is removed.

Remove and clean the milk valve at least once a month. If the following issues occur during milk preparation, the milk

valve may be blocked: only hot milk is dispensed instead of milk froth, the milk sprays out. Clean the milk valve more often if necessary.

Removing the milk valve

Only remove the milk valve when the coffee machine is switched off. Do **not** switch on the coffee machine while the milk valve is removed.

- Switch the coffee machine off.
- Open the appliance door.
- Remove the bean container and maintenance container on the left-hand side.
- Remove the central spout's stainless steel cover.

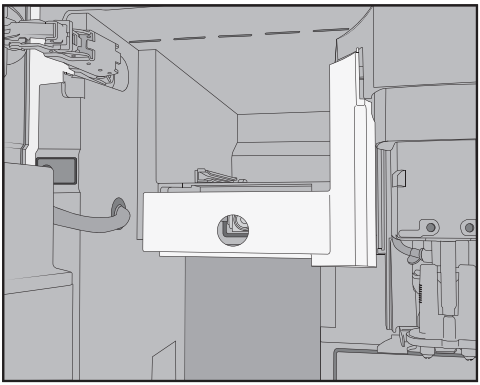

- Remove the milk valve cover. Press on the recessed grip to unlock the cover. On the top right-hand side of the cover, you will find a pin for swiveling the cover out.

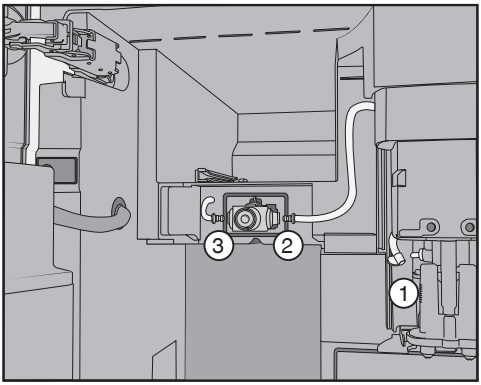

- Detach the milk pipework from the dispensing unit on the central spout ① and from the milk valve silicone seal (② and ③).
- Remove the milk pipework ① connecting the milk valve to the central spout.
- Disconnect the angular molded hose from the round hose.
- Rinse the hoses thoroughly under running water.

Do **not** remove the connecting pieces from the hoses.

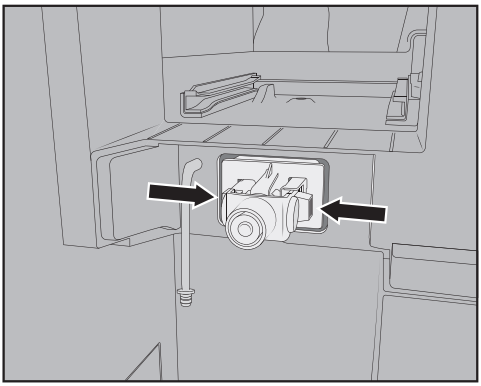

- Press the catches on the left and right-hand sides of the milk valve holder and pull the holder forward to remove it.

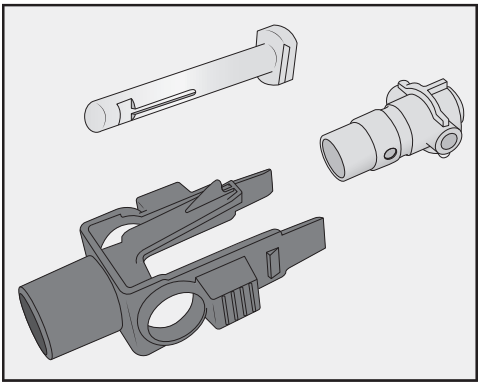

- Take the holder and silicone seal apart.

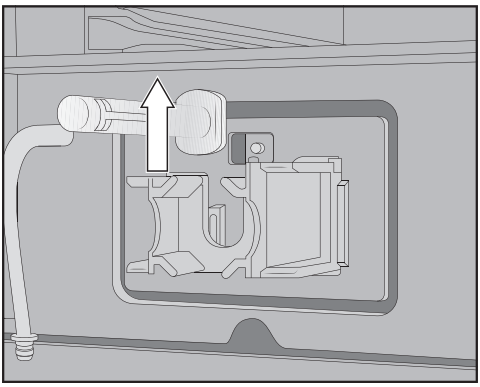

- Pull the stainless steel bolt upward and out.

Cleaning the milk valve

The milk valve cover is not dishwasher-safe.
The milk valve cover may be damaged if cleaned in the dishwasher.
The milk valve cover should only be cleaned **by hand**.

Do **not** switch on the coffee machine while the milk valve is removed.

- Clean all parts of the milk valve by hand.

Tip: With the exception of the cover, all parts of the milk valve should be cleaned in the dishwasher from time to time to give them a thorough clean.
If there are any dry milk residues on the front, soak the stainless steel bolt in a mild solution of warm water and liquid dish soap.

Inserting the milk valve

Do **not** switch on the coffee machine while the milk valve is removed.

- Insert the stainless steel bolt from above.
- Insert the silicone seal into the milk valve holder.

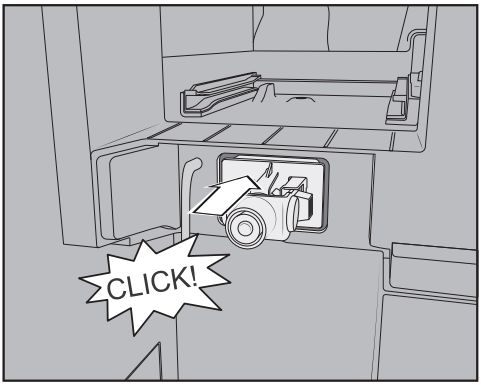

- Insert the holder and silicone seal until they audibly click into place.

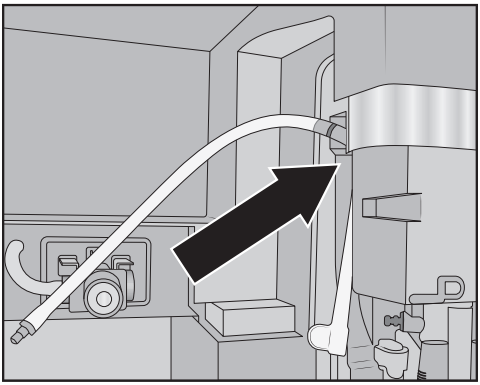

- Connect together the angular molded hose and longer milk pipework. Start by attaching the top of the molded hose to the central spout. The black connecting piece should be pointing to the rear.
- Then, connect the bottom end of the molded hose to the dispensing unit.
- Insert the milk pipework into the milk valve on the left and right-hand sides. Push the connecting pieces into the silicone seal as far as they will go.
- Check that the milk pipework is snug against the housing and that the cover can be easily attached.

Tip: If necessary, screw the milk pipework backward at the connecting piece on the right-hand side.

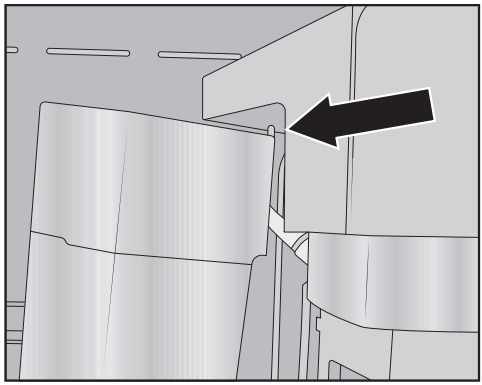

- Attach the milk valve cover as follows: insert the pin in the top right-hand corner and swivel the cover backward until a proper fit is achieved.
- Push the left-hand bean container and maintenance container back into the coffee machine.
- Attach the central spout's stainless steel cover.
- Close the appliance door.

You can now switch the coffee machine back on.

Cleaning the bean containers

⚠ Risk of damage from incorrect use and cleaning.
Immersing the bean containers in liquids can result in malfunctions. If they are taken apart, bits may break off or the mechanism may no longer work properly once they are re-assembled.
Do not disassemble the bean containers.
Do not immerse the bean containers in liquids, e.g., soapy water.

Coffee beans contain oils which can deposit on the walls of the bean containers and hinder the flow of the beans. Therefore, clean the bean containers at least once a month with a soft cloth.

If required, you can clean the lids of the bean containers **by hand** with a mild solution of warm water and liquid dish soap. Dry the lids thoroughly before replacing them on the bean containers.

- Open the appliance door.
- Pull the left and right-hand bean containers out of the coffee machine.
- Clean the bean container wells inside the machine.

Tip: Use a vacuum cleaner to remove any coffee residues from the interior.

- Remove the lids and empty the bean containers.

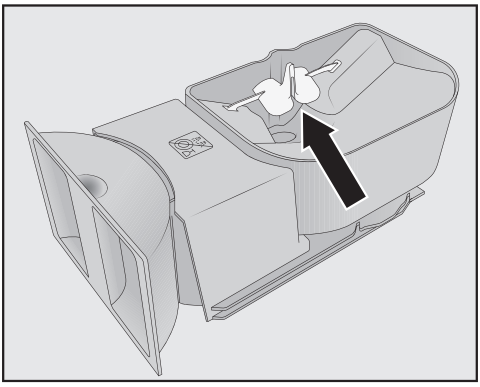

Do not remove the components for improving the flow of the beans (see arrow).

- Clean the bean containers and lids **by hand** using a slightly damp cloth.
- Dry all parts carefully before filling the bean containers with roasted coffee beans again.
- Replace the lids.
- Push the bean containers back into the coffee machine.
- Close the appliance door.

Cleaning the brew unit and interior by hand

The moving parts of the brew unit are lubricated. Cleaning agents will damage the brew unit.
Only clean the brew unit by hand with warm water. **Do not use any cleaning agents**.

Remove and rinse out the brew unit **once a week**. Also clean the area below the brew unit once a week.

Removing the brew unit

It might not be possible to re-insert the brew unit if you have removed it and changed the position of the handle.
Once you have removed the brew unit, **do not** change the position of the handle.

- Open the appliance door.
- Remove the water container.

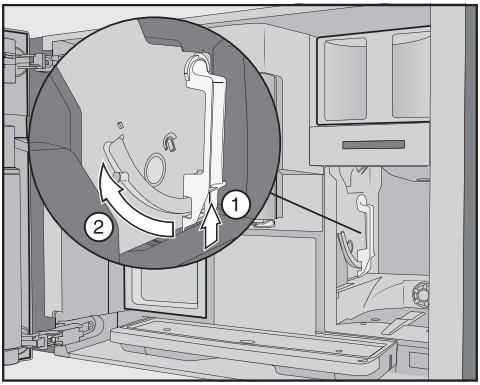

- Press the button under the handle of the brew unit ① and, while doing so, turn the handle forward ②.

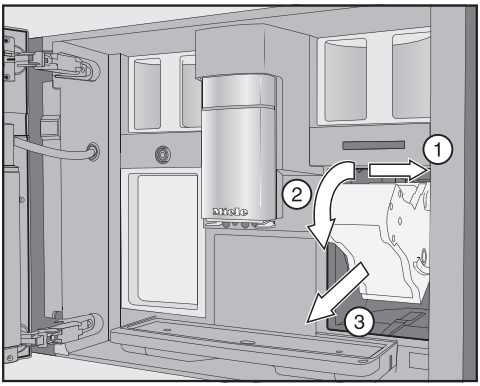

- Pull the brew unit to the side ① first and then pull out to the front ③. Tilt the brew unit forward ②.

If you cannot remove the brew unit or can only do so with difficulty, the brew unit drive is not in the correct position.

Cleaning the brew unit

The moving parts of the brew unit are lubricated. Cleaning agents will damage the brew unit.
Only clean the brew unit by hand with warm water. **Do not use any cleaning agents**.

- Clean the brew unit **by hand under warm running water** without using cleaning agent.

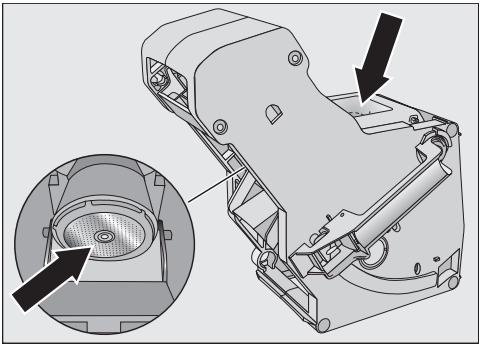

- Wipe any remaining coffee off the two filters. One filter is located in the funnel. The other filter can be found to the left of the funnel.
- Dry the funnel to prevent ground coffee sticking to it the next time a coffee is made.

Cleaning the interior of the appliance

- Use your vacuum cleaner to remove dry coffee grounds.

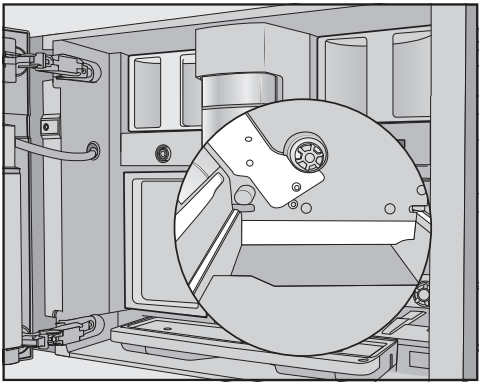

- Clean the niche of the brew unit with a damp, clean cloth. Clean the areas marked in white in the illustration, e.g., around the drive shaft, especially well.

Inserting the brew unit

- To insert, follow the instructions for removal in reverse order: push the brew unit back into the coffee machine. Tilt the brew unit forward a little when doing this.

If you cannot re-insert the brew unit, the brew unit drive is not in the correct position.

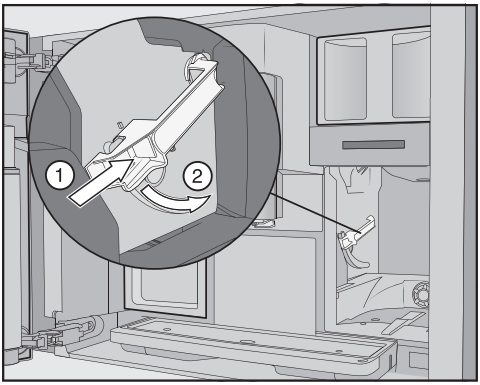

- Press the button under the handle of the brew unit ① and, while doing so, turn the handle backward ②.

Tip: If you are unable to turn the brew unit handle, apply firm pressure to the sides of the brew unit.

- Push the water container into the coffee machine.

The process of removing and inserting the brew unit causes ground coffee to drop into the drip tray.

- Remove the drip tray and clean the lid.
- Push the drip tray back into the coffee machine.
- Close the appliance door.

Cleaning the interior, inside of the appliance door, and drip tray

Clean the interior and appliance front as part of the normal cleaning process. For instance, if you remove the water container, use this as an opportunity to clean the area under the water container at the same time.

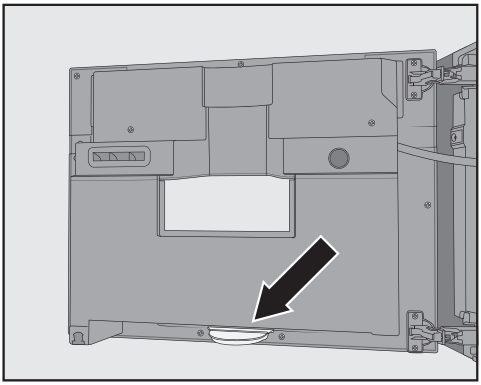

The drip tray is located at the bottom on the inside of the appliance door. Clean the drip tray regularly.

- Open the appliance door.
- Clean the drip tray.
- Remove the following parts from the interior:

- Water container
- Drip tray
- Maintenance container
- Brew unit
- Bean container

Tip: Use your vacuum cleaner to remove dry ground coffee residues.

- Clean the interior and the inside of the appliance door by hand with a clean and slightly moist cloth/microfiber cloth.
- Wipe the interior and appliance door dry using a soft cloth.

- Reinsert all parts.
- Close the appliance door.

Cleaning the appliance front

If soiling is not removed promptly, it could cause the surface to alter or discolor.
Remove any soiling on the appliance front straight away.
Make sure that water cannot get behind the display.
Clean the appliance front after descaling. If possible, wipe up any spillages of descaling agent immediately.

Tip: Before cleaning the control panel, open the appliance door. This will prevent accidental operation.

- Clean the appliance front with a clean and slightly damp cloth/microfiber cloth.
- Dry all surfaces with a soft cloth.

Tip: You can also use a Miele Microfiber Cloth to clean the front.

Maintenance programs

The coffee machine has the following maintenance programs:

- Rinsing the machine
- Rinsing the milk pipework
- Cleaning the milk pipework
- Degreasing the brew unit
- Descaling the machine

Carry out the relevant maintenance program when the prompt to do so appears in the display. You can also start maintenance programs at any time so that the coffee machine does not prompt mandatory cleaning at an inconvenient time.

Tip: To save you having to empty the drip tray too often, you can place the maintenance container under the central spout.

Opening the Maintenance menu

- Touch the ⓪ sensor control.

You can now select a maintenance program.

Rinse appliance

If you have made a coffee, the coffee machine will rinse the coffee pipework automatically before switching off.
You can also start the Rinse appliance function manually.

Rinse milk pipework

If you have made a drink with milk, the coffee machine will rinse the milk pipework automatically after a few minutes. You can also start the Rinse milk pipework function manually.

Cleaning the milk pipework

The milk pipework must be cleaned at least once a week.

The Clean milk pipework maintenance program lasts for approx. 15 minutes.

- Touch the ⓪ sensor control.
- Select Clean milk pipework.
- Confirm with *OK*.

The process will start and various messages will appear in the display.

- Follow the instructions on the display.

When Fill the water container with cleaning agent and lukewarm water up to the //||\\ symbol and insert. Close the door. appears in the display, proceed as follows:

For optimum cleaning results, we recommend using the Miele Cleaning Agent for milk pipework.
The powder cleaning agent for milk pipework has been specially developed for use with Miele Coffee Machines and prevents subsequent damage.

You can order the cleaning agent for milk pipework from the Miele online shop, from Miele Customer Service, or from your Miele dealer.

- Add **2** sticks of the cleaning agent for milk pipework to the water container.

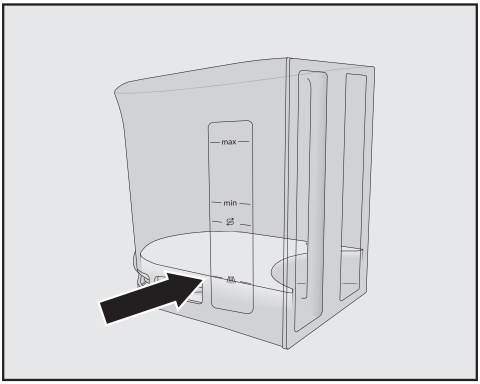

- Fill the water container to the //\\\ mark with lukewarm water and stir the solution.

Follow the instructions for the cleaning agent mixing ratio carefully. Fill the water container with the specified amount of water. Otherwise, cleaning will be incomplete.

- Reinsert the water container.
- Close the appliance door.
- Follow the instructions on the display.
- If prompted to do so in the display, rinse the water container thoroughly with clean water. Make sure that **no** cleaning agent is left in the water container.
- Fill the water container with drinking water.

The cleaning process is complete when the drinks menu appears.

Degreasing the brew unit

Depending on the natural oil content of the coffee used, the brew unit can become blocked quite quickly. The brew unit must be degreased regularly in order to ensure aromatic coffee and trouble-free operation of the coffee machine.

We recommend using Miele cleaning tablets to clean the brew unit. These have been specially developed for degreasing the brew unit in Miele Coffee Machines and prevent subsequent damage.

The cleaning tablets are available to order from the Miele online shop.

After 200 portions have been dispensed, a message prompting you to degrease the brew unit will appear in the display.

- Confirm the message with *OK*.

This message will keep being displayed until the brew unit has been degreased.

Starting Degrease brew unit

- Touch the ⓪ sensor control.
- Select Degrease the brew unit and tap *OK*.

The maintenance program will then start.

- Follow the instructions on the display.

Remove the water container and the brew unit. Clean the interior of the machine. Rinse the brew unit by hand and refit it with a cleaning tablet in it. appears in the display.

Removing the brew unit

It might not be possible to re-insert the brew unit if you have removed it and changed the position of the handle.
Once you have removed the brew unit, **do not** change the position of the handle.

- Open the appliance door.
- Remove the water container.

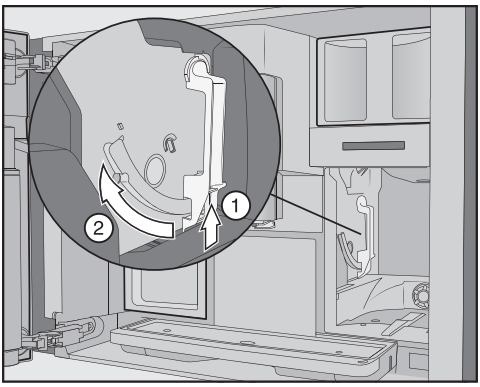

- Press the button under the handle of the brew unit ① and, while doing so, turn the handle forward ②.

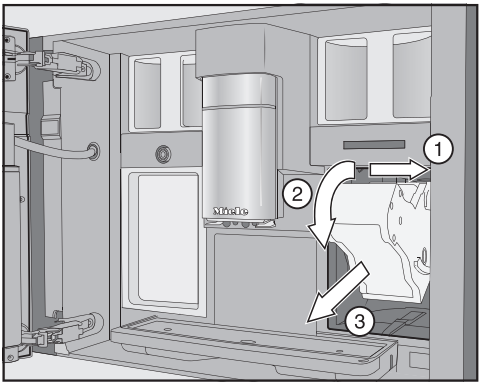

- Pull the brew unit to the side ① first and then pull out to the front ②. Tilt the brew unit forward ③.

If you cannot remove the brew unit or can only do so with difficulty, the brew unit drive is not in the correct position.

Cleaning the brew unit and interior

The moving parts of the brew unit are lubricated. Cleaning agents will damage the brew unit.
Only clean the brew unit by hand with warm water. **Do not use any cleaning agents**.
To ensure good tasting coffee and to prevent a build-up of bacteria in the machine, remove and clean the brew unit under running water once a week.

- Clean the brew unit **by hand under warm running water** without using any cleaning agents.

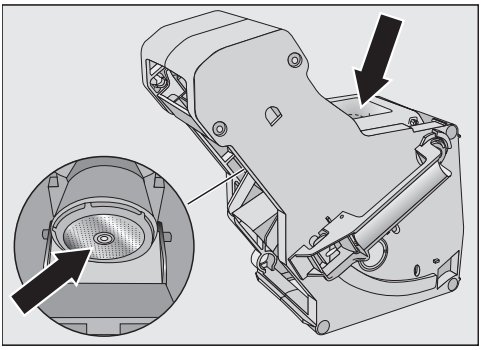

- Wipe any remaining coffee off the two filters. One filter is located in the funnel and the other to the left of the funnel.

The process of removing the brew unit causes ground coffee to drop into the drip tray.

- Remove the drip tray and clean the lid.
- Clean the interior of the coffee machine (see also “Cleaning and care – Removing the brew unit and cleaning it by hand”). Use a vacuum cleaner to remove dry ground coffee residues.

Dropping a cleaning tablet into the brew unit

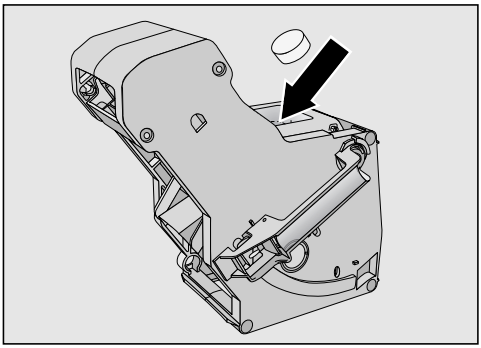

- Drop a cleaning tablet into the top of the brew unit (arrow).
- Push the brew unit containing the cleaning tablet back into the coffee machine.

If you cannot re-insert the brew unit, the brew unit drive is not in the correct position.

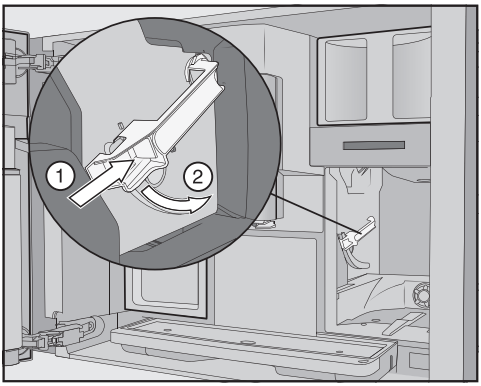

- Press the button under the handle of the brew unit ① and, while doing so, turn the handle backward ②.
- Push the water container and drip tray (plus grounds container) back into the coffee machine.

- Close the appliance door.
- Follow the additional instructions given in the display.

The cleaning process is complete when the drinks menu appears.

Descaling the appliance

Risk of damage from splashes from the descaling solution.
Sensitive surfaces and/or natural floors can suffer damage.
Wipe up any spillages immediately when descaling.

Limescale builds up in the coffee machine through use. How often the machine needs to be descaled will depend on the water hardness level in your area. Limescale must be removed regularly.

The machine will guide you through the descaling process. Various messages will appear in the display, e.g., you will be prompted to empty the drip tray or fill the water container.

Descaling **must be carried out**. The process takes approx. 35 minutes.

The coffee machine prompts you in the display when it needs to be descaled. The remaining number of drinks that can be made before descaling will show in the display after each drink.

- Confirm the message with *OK*.

When the number of remaining portions reaches 0, the coffee machine will lock.

You can switch the coffee machine off if you do not want to carry out the descaling program at this point. You cannot make any drinks until the machine has been descaled.

Descaling after prompt appears in the display

Descale the appliance will appear in the display.

- Confirm the message with *OK*.

The process will start.

- Follow the instructions in the display.

When Place 2 descaling tablets in the water container and fill it with lukewarm water up to the descaling symbol ⇄ and insert it. Close the door. appears in the display, proceed as follows.

For optimum descaling results, we recommend using the Miele descaling tablets.
The descaling tablets have been specially developed for Miele coffee machines.

Other descaling agents, which contain other acids besides citric acid and/or other undesirable substances, such as chlorides, may cause damage to the product. Moreover, the descaling result required cannot be guaranteed if the descaling solution was not of the appropriate concentration.

The descaling tablets are available to order from the Miele online shop.

You will need **2** descaling tablets.

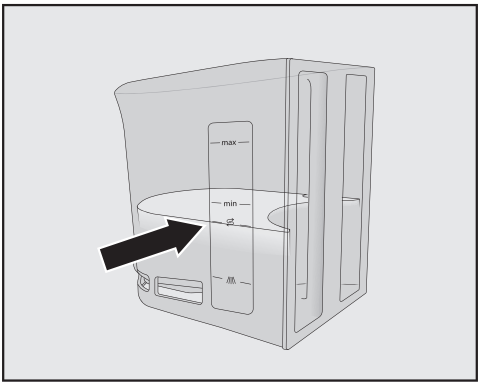

- Fill the water container to the ⇆ mark with lukewarm water.
- Add **2** descaling tablets to the water container.

Follow the instructions for the mixing ratio carefully. Fill the water container with the specified amount of water. Otherwise, descaling will be incomplete.

Carrying out descaling

- Reinsert the water container.
- Follow the additional instructions given in the display.

When Fill the water container up to the ⇆ symbol and insert. Close the door. appears in the display:

- Remove the water container and rinse it thoroughly with clean water. Ensure that **no** descaling solution residue remains in the water container. Fill the water container with tap water.

The descaling process is complete when the drinks menu appears.

Lubricating the brew unit

Lubricate the brew unit once a year and as required if the brew unit is difficult to remove and re-insert.

Use food-grade silicone grease.

- Open the appliance door.
- Remove the brew unit.

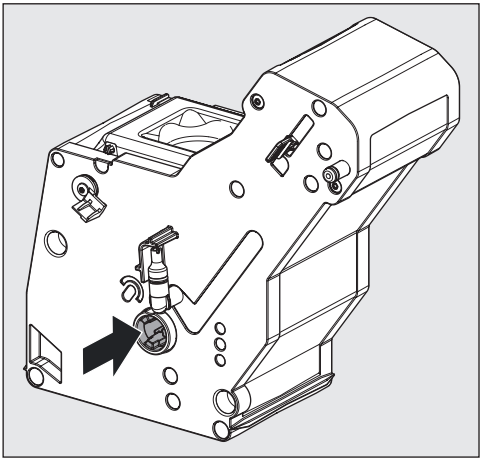

- Apply a pea-sized amount of silicone grease to the brew unit's drive shaft.
- Re-insert the brew unit.
- Close the appliance door.

Frequently asked questions

Many malfunctions and faults that can occur in daily operation can be easily remedied. You can save time and money in many cases, as you do not need to contact Miele Customer Service.

Information to help you rectify faults yourself can be found at www.miele.com/service.

The following tables are designed to help you to find the cause of a malfunction or fault and resolve it.

Many malfunctions and faults can be easily remedied. You can save time and money in many cases, as you do not need to contact Miele Service.

More information to help you rectify faults yourself can be found at https://www.mieleusa.com/support/customer-assistance.

Messages in the display

Error messages must be confirmed with *OK*, otherwise the message may reappear in the display even though the problem has been remedied.

To address the fault, follow the instructions on the display.

If the error message appears in the display again, contact Miele Technical Service.

Problem	Possible cause and solution
F1, F2, **F80, F82** **F353, F354**	There is an internal fault. ■ Switch the coffee machine off. Wait for approximately 1 hour before switching the machine back on again.
F74, F77 **F225, F226** **F235, F353, F354**	There is an internal fault. ■ Switch the coffee machine off. Wait for approximately 2 minutes before switching the machine back on again.

Problem	Possible cause and solution
F73 or Check the brew unit	The brew unit cannot be positioned correctly or is soiled. It is not possible to press the ground coffee. ■ Check whether you can remove the brew unit. ■ If you can remove the brew unit, rinse it under running water. 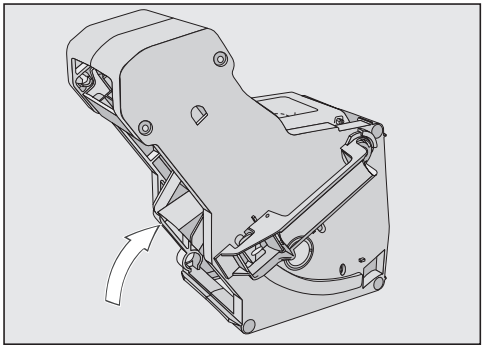 ■ Push the coffee ejector of the brew unit into the correct position (see image). ■ Replace the water container in the coffee machine and close the door. Do not insert the brew unit. Switch the coffee machine on. This will initialize the brew unit motor and put it back into the start position. ■ When Insert the brew unit appears in the display, put the brew unit back in the coffee machine. Close the machine door. ■ If you cannot remove the brew unit, switch the coffee machine off. Wait for approximately 2 minutes before switching the machine back on again.
A maintenance program is prematurely aborted and the following appears in the display: Push the water container in until it engages.	The water container has not been filled and inserted correctly. ■ Check that you have selected the correct mark. The symbols marked on the water container indicate the amount of water required for the Descale the appliance: ⇆ and Clean milk pipework: ////\ maintenance programs. ■ Fill the water container up to the relevant mark and restart the process.

Frequently asked questions

Problem	Possible cause and solution
Check water intake and empty the water container	The plumbed-water supply is not working. ■ Check whether the intake hose is kinked or the water supply valve is not turned on completely. ■ Remove and empty the water container. ■ Insert the empty water container into the coffee machine. The following message is displayed: Please wait. Water container is being filled. The water container fills up. To turn off the plumbed-water connection, fill and insert the water container. You can then select Settings ⚑: Water connection | Off.
F233	The cup-rim sensor is not inserted or is incorrectly inserted. If the central spout is moving upward and the cup-rim sensor is bumped, e.g., with a cup, the cup-rim sensor loses its reference position. ■ Confirm the message with *OK*. ■ Reinstall the cup-rim sensor. Cup-rim detection remains inactive and the central spout stays in the top position until the coffee machine is next switched on. Cup-rim detection is reinitialized during the next switch-on operation.
F 307 or Remove the milk valve and clean it	The milk valve is faulty. ■ Remove and clean the milk valve (see “Cleaning and care – Removing and cleaning the milk valve”).

Unusual performance of the coffee system

Problem	Possible cause and solution
The display remains dark when the coffee machine is turned on using the On/Off button ⏻.	The On/Off button ⏻ was not held for long enough. ■ Tap and hold the On/Off button ⏻ for at least 3 seconds.
	The plug is not properly plugged into the electrical socket. ■ Insert the plug into the electrical socket.
	The fuse has tripped because the coffee machine, voltage, or another appliance is defective. ■ Remove the plug from the socket. ■ Contact a qualified electrician or Technical Service.

Problem	Possible cause and solution
The lighting remains off after the coffee machine has been switched on.	The lighting has been switched off. ■ Switch the lighting on (see “Lighting” in the “Settings” chapter).
	The lighting is faulty. ■ Contact Technical Service.
The coffee machine does not respond to operation via the display.	There is a fault. ■ Tap and hold the On/Off button ⏻ until the display switches off and the machine restarts.
The coffee machine turns off suddenly.	The factory-set switch-off time (20 minutes) or the switch-off time you have programmed has been reached. ■ If required, you can select a new switch-off time (see “Settings – Timer”).
	The plug is not properly plugged into the electrical socket. ■ Insert the plug into the electrical socket.
The sensor buttons do not respond. **The coffee machine can no longer be operated.**	There is an internal fault. ■ Disconnect the coffee machine from the electricity supply by removing the plug from the socket or switching off the breaker.
A fan can be heard even though no drinks are being prepared and the coffee machine is switched off.	This is not a fault. Once a drink has been dispensed or the machine has been switched off, the internal fan will continue to run until the interior is sufficiently dehumidified.
The coffee machine brew unit cannot be removed.	The brew unit drive is not positioned correctly. ■ If necessary, turn the handle on the brew unit back to the start position. ■ Close the appliance door. ■ Switch the coffee machine off. ■ Wait approx. 1 minute before switching the coffee machine back on. This will initialize the brew unit drive and put it back into the start position. ■ If necessary, repeat these steps.

Frequently asked questions

Problem	Possible cause and solution
The brew unit cannot be re-inserted into the coffee machine.	The brew unit drive is not positioned correctly. ■ Close the appliance door. ■ Switch the coffee machine on. This will initialize the brew unit drive and put it back into the start position. ■ If necessary, repeat this step.
Drink dispensing is prematurely aborted even though there is a container under the central spout.	This is not a fault. If the container has a very wide opening that prevents the cup-rim sensor from making contact with the edge of the container (e.g., in the case of a very large cup), the drink will be canceled. Use a different container or position the existing one so that the sensor can detect the rim.
Coffee dispensing is repeatedly interrupted and the message Fill the bean container **appears in the display.**	This is not a fault. The brew unit has not detected the ground coffee. Certain types of coffee produce a small amount of coffee when they are ground. Usually the grinder is set too fine and the amount is set to minimum. ■ Confirm the message with *OK*. If the display appears with all types of coffee: ■ Set the grinder to a coarser setting (see “Grinder setting”). ■ Select a larger amount of coffee. Don't forget to check any drinks changed in “User profiles”.
	If the message only appears when dispensing certain drinks: ■ Check the amount of coffee set for this drink (see “Amount of coffee”). Select a larger amount of coffee. ■ You may also need to set a coarser grinder setting.

Problem	Possible cause and solution
The coffee machine does not switch itself on even though the Turn on at **setting has been activated for the timer.**	The system lock is activated. ■ Deactivate the system lock.
	The current day of the week has not been selected. ■ Check the timer settings and change these if necessary.
	The coffee machine was not used after being switched on automatically three times in succession (vacation mode). ■ Switch the machine on and dispense a drink.
Steam is dispensed instead of water while preparing hot water or making tea.	It is likely that the wrong altitude has been set. ■ Change the altitude settings (Settings ⚑ I Altitude). ■ If necessary, you can also change the temperature settings for the drinks (Parameters).
The display is hard to see or not legible.	The display brightness has been set too low. ■ Change this setting (see “Settings”).
The display lights up but the coffee machine does not heat up and no drinks are made.	The Demo mode for demonstrating the coffee machine in stores and showrooms has been activated. ■ Deactivate Demo mode (see “Settings”).

Unsatisfactory results

Problem	Possible cause and solution
The coffee is not hot enough.	The cup has not been pre-heated. The smaller the cup and the thicker its walls, the more important it is to pre-heat it. ■ Pre-heat the cup with hot water, for example.
	The brewing temperature is set too low. ■ Set a higher brewing temperature.
	The filters in the brew unit are blocked. ■ Remove the brew unit and clean it by hand. ■ Degrease the brew unit.

Frequently asked questions

Problem	Possible cause and solution
The coffee grinder makes a louder noise than usual.	The coffee bean container has become empty during the grinding process. ■ Fill the coffee bean container with fresh beans.
	There may be foreign objects such as plastic or stones in amongst the coffee beans. ■ Switch the coffee machine off immediately. Contact the Technical Service department.
The coffee is dispensed too slowly into the cup.	The brew unit is blocked. ■ Degrease the brew unit (see “Cleaning and care – Degreasing the brew unit and cleaning the interior”).
The crema on the coffee or espresso is not as it should be.	The coffee beans are no longer fresh. If roasted coffee beans are stored open for too long, the carbon dioxide gradually escapes from the coffee beans. The crema is no longer formed during dispensing. Of course, you can still use the coffee beans.
The coffee tastes weak. The coffee grounds in the grounds container are sludgy and grainy.	Less coffee is being brewed because insufficient coffee beans are getting into the grinder. Have you used a dark roast? This type of coffee bean is often oily. These oils can cling to the walls of the coffee bean containers and hinder the flow of beans. Are you using a type of coffee with very large beans or different sized beans? The beans are possibly getting wedged or jammed and forming “bean bridges”. ■ Clean the coffee bean containers more often if you are using darker, more oily coffee beans. ■ If you are using a type of coffee with very large beans or different sized beans, pull the bean containers out slightly and give them a shake. ■ If necessary, try using a different type of coffee.
Coffee is not being dispensed from both dispensers evenly. Milk may be sputtering when being heated up.	Coffee deposits in the central spout prevent the dispensing of the drinks. ■ Take the central spout apart and wash all the components – with the exception of the stainless steel cover – in the dishwasher. This cleaning operation should be performed **once a week**.

Problem	Possible cause and solution
The consistency of the milk froth is unsatisfactory.	The milk temperature is too high. Good milk froth can only be achieved when cold milk (below 50°F/10°C) is used. ■ Check the temperature of the milk in the milk flask.
	The milk pipework is blocked and/or the milk valve is soiled. ■ Remove and clean the milk valve.

Information to help you rectify faults yourself and about Miele spare parts can be found at www.miele.com/service.

Contact in the event of a fault

In the event of a fault which you cannot remedy yourself, please contact your Miele dealer or Miele Customer Service.

You can book a Miele Service Call online at www.miele.com/service.

Contact information for Miele Customer Service can be found at the end of this document.

Please quote the model identifier and serial number of your appliance (SN) when contacting Miele Customer Service. Both pieces of information can be found on the data plate.

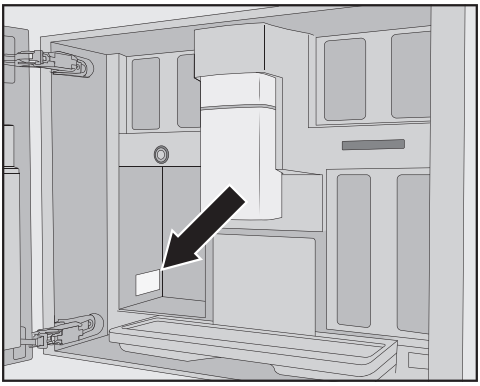

Appliance warranty and product registration

You can register your product and/or view the manufacturer´s warranty terms and conditions for Miele appliances and vacuum cleaners at www.mieleusa.com.

Availability of replacement parts, repair services and maintenance information

(for Canada only)

Miele guarantees the availability of replacement parts, repair services, and the information necessary to maintain or repair this product for a reasonable period and at a reasonable price, in accordance with applicable law.

These products and other useful accessories can be ordered via the Miele Webstore, from Miele Service or from your Miele dealer.

- **Cleaning agent for milk pipework**
  for cleaning the milk system
- **Cleaning tablets**
  for degreasing the brew unit
- **Descaling tablets**
  for descaling the water pipework
- **CJ Jug 1.0 L**
  Insulated flask for coffee or tea (pot function)

Caring for the environment

Disposal of the packing material

The cardboard box and packing materials protect the appliance during shipping.

Ensure that any plastic wrappings, bags, etc. are disposed of safely and kept out of the reach of children. Danger of suffocation!

Saving energy

The following tips can help you save energy and money as well as help the environment:

- Operate the coffee machine in Eco mode (default setting).
- Switch off the time of day display.
- Select a lower lighting setting or refrain from using any lighting.
- Switch off the lighting when the appliance is switched off.
- Select the dark colour scheme for the display.
- Reduce the brightness of the display.
- If you change the factory default settings for the “Timer”, this can increase the energy consumption of the coffee machine.
- Pay particular attention to the following message on the display: This setting uses more energy
- Switch the coffee machine off with the On/Off switch ⏻ if it is not going to be used for a while.

Disposal of your old appliance

Electrical and electronic appliances contain valuable materials. They also contain certain substances, compounds and components which were essential for the proper functioning and safe use of the equipment. Handling these materials improperly by disposing of them in your household waste can be harmful to your health and the environment. Therefore, please do not dispose of your old appliance with regular household waste and follow local regulations on proper disposal.



Consult with local authorities, dealers or Miele in order to dispose of and recycle electrical and electronic appliances. Miele assumes no responsibility for deleting any personal data left on the appliance being disposed. Please ensure that your old appliance is kept away from children until removal. Observe safety requirements for appliances that may tip over or pose an entrapment hazard.

Plumbed water connection

⚠ Risk of injury and appliance damage if appliance is not connected properly.
Failing to connect the appliance properly can result in personal injury and/or material damage.
The appliance may only be connected to the plumbed-water connection by qualified specialists.

⚠ Risk to health and risk of damage due to contaminated water.
The quality of the incoming water must conform to the requirements for drinking water in the country where the coffee machine is being used.
Connect the coffee machine to the water supply.

Connection to the water supply must comply with the applicable regulations in the country where the appliance is being installed. All units and systems used to supply water to the coffee machine must also comply with the applicable regulations in the respective country.

Connect the coffee machine directly to the plumbed-water supply.
Avoid connecting the coffee machine to a water supply in which the water might stagnate. Otherwise, the flavor of the drinks could be impaired.

The coffee machine may only be connected to a cold-water supply.

The water-connection pressure needs to be between 100 and 1,000 kPa (14.5 to 145 psi).

A water supply valve must be provided between the stainless-steel hose and the domestic-water supply to ensure that the water supply can be cut off if necessary. Make sure the water supply valve remains easily accessible once the coffee machine has been installed.

Connecting the appliance to the water supply line

Make sure that the supply line is not kinked or damaged.

A 3/4” BSP to 1/4” compression fitting adapter is supplied with the machine. Suitable 1/4” O.D flexible water line or copper piping is not included.

- Remove the water connection cover from the bottom of the back panel of the machine.
- Take the **angled** side of the brass fitting and check whether a gasket is present. If not, insert one.
- Screw the supply line coupling nut onto the threaded union.
- Ensure that the supply line is correctly fitted and that it is water-tight.

Connecting the water supply

⚠ Disconnect the coffee machine from the power supply before connecting it to the water supply.
Turn off the water supply at the water supply valve before connecting the coffee machine to the water supply.

Make sure that the water supply valve remains accessible after the machine has been installed.

To connect the coffee machine to the water supply, a water supply valve with a 3/4" connection is required.

- Check that a seal is present. Install one if necessary.

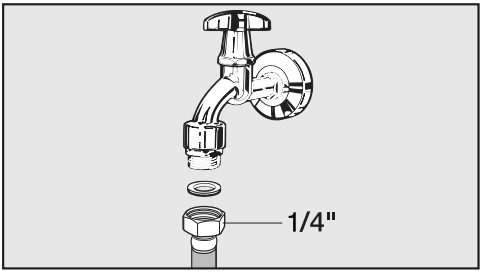

- Connect the stainless-steel hose to the water supply valve.
- Ensure that it is screwed into position correctly.
- Turn on the water supply valve slowly and check for leaks at the plumbed-water connection.
  Correct the position of the seal and screw thread if appropriate.

You can now continue installing the coffee machine.

Electrical connection

Before connecting the coffee machine, make sure that the connection data on the data plate (voltage and frequency) matches the electrical supply.
This data must match to avoid the risk of damage to the coffee machine. If in any doubt, consult a qualified electrician.

The necessary connection data is given on the data plate inside your appliance.

The fuse rating must be at least 15 A.

If possible, the socket should remain easily accessible. If the socket is no longer accessible after installation, an additional means of disconnection must be provided for all poles. Suitable means of disconnection include switches with an all-pole contact gap of at least 1/8" (3 mm).

Temporary or permanent operation on an autonomous power supply system or a power supply system that is not synchronized with the grid power supply (e.g., island networks, backup systems) is possible. A prerequisite for operation is that the power supply system complies with local regulations and standards.
The function and operation of the protective measures provided in the domestic electrical installation and in this Miele product must also be maintained in isolated operation or in operation that is not synchronized with the grid power supply, or these measures must be replaced by equivalent measures in the installation.

As described, for example, in the current version of VDE-AR-E 2510-2.

The coffee machine must not be used with **energy saving plugs**. These reduce the energy supply to the machine, which could generate excessive heat.

Installation dimensions

Installation in a tall cabinet

Maintain a minimum installation height of 33 7/16" (850 mm).

All dimensions are given in inches (mm).

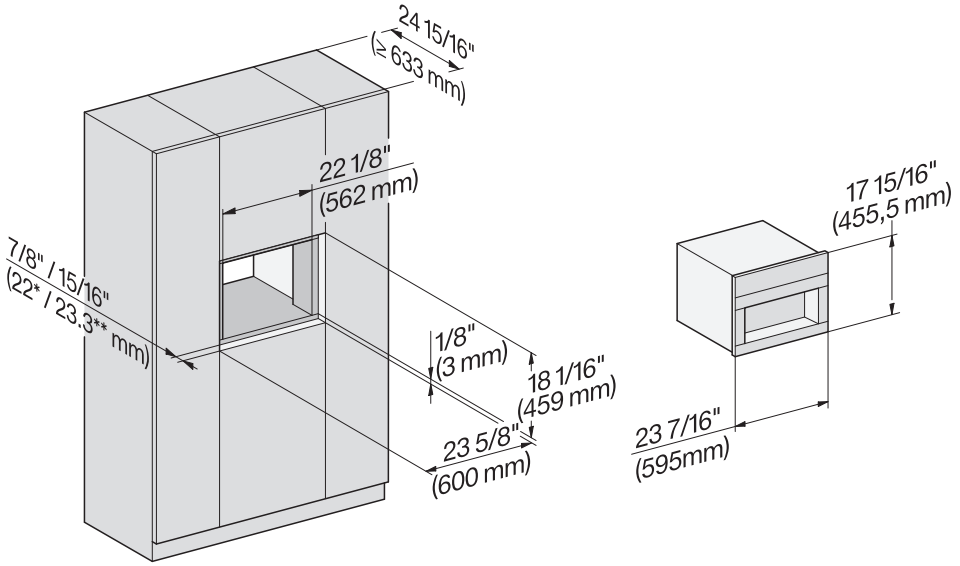

Combination with other Miele built-in appliances is possible. If the coffee machine is to be built in above another appliance, there must be a full-width, closed shelf between them. If the appliance is to be combined with a Gourmet warming drawer/ built-in vacuum drawer, no shelf is required in between.

Installation and connections

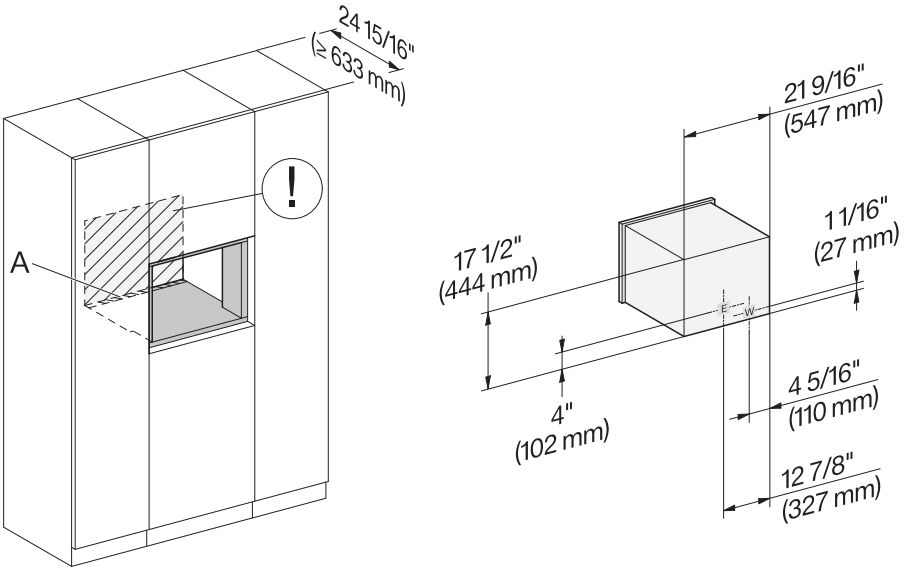

A Cut-out (at least 20"/508 mm wide) in the niche floor of the tall cabinet for power cord and ventilation

E Electrical connection

W Plumbed-water connection

ⓘ No electrical or plumbed-water connection in this area

Building in the coffee machine

⚠ Danger of injury due to incorrect operation.
A machine that has not been built in is not safe and can cause injuries.
Only ever use the coffee machine once it has been built-in.

⚠ Danger of damage due to incorrect operation.
If the ambient temperature range is not observed, the coffee machine may not function properly.
Only ever operate the coffee machine when the ambient temperature is within the range of 60-100°F (16-38°C).

Maintain a minimum installation height of 33 1/2" (850 mm).

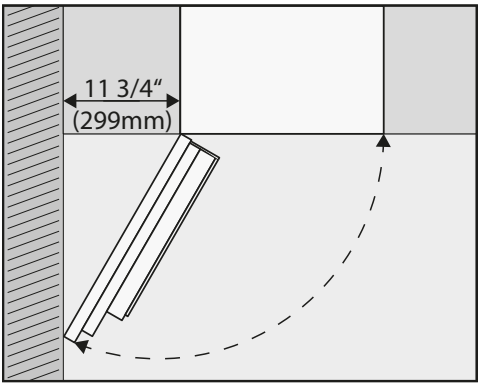

Tip: If a gap of at least 11 ¾" (299 mm) is maintained between the wall and the coffee machine, you will be able to open the appliance door wider, making the machine easier to use. For instance, it will be easier to remove the left-hand bean container.

To install the machine, you will need a TX 20 screwdriver.

Tip: We recommend providing a place to sit the coffee machine which is the same height as the building-in niche. This will make it easier to connect the appliance to the electricity and water supply.

Connecting the water and electricity supplies

Observe the information under “Plumbed-water connection” and “Electrical connection”.

- Connect the coffee machine to the water and electricity supplies.

Removing the shipping struts

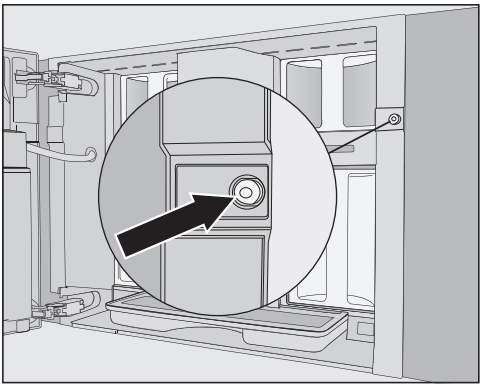

There is a red silicone plug inside the screw hole which secures the appliance door during transport to prevent transport damage.

Remove the silicone plug **before** screwing the coffee machine to the cabinet.

- Pull firmly on the red silicone plug to remove it from the screw hole.

The silicon plug is not required again. Dispose of it with your household waste.

Pushing in and aligning the coffee machine

When pushing the appliance into the niche, make sure that the electrical and plumbed water connections do not get trapped or damaged.

- Push the coffee machine all the way into the niche until you feel a resistance.
- Check the height of the coffee machine to make sure that it is sitting centrally in the niche and that it is level. Align the appliance.

Never align the coffee machine by adjusting the door hinges. This will prevent the milk flask from attaching correctly and interfere with the milk preparation process.

You can now screw the coffee machine to the cabinet.

Screwing the coffee machine to the cabinet

- Open the appliance door.

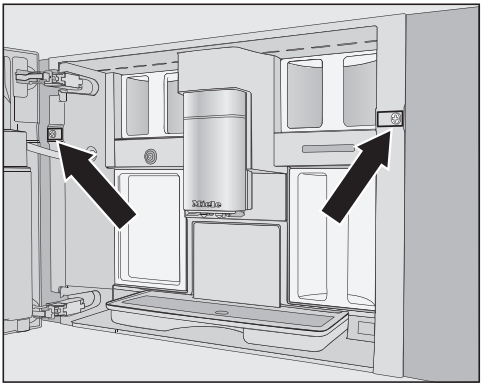

2 TX20 (25 mm) screws are supplied with the appliance.

- Secure the coffee machine to the side walls of the cabinet using the screws supplied. Tighten both screws by hand.

Tip: To make it easier to attach the screw on the left, you can remove the door opening limiters and increase the door opening angle to approx. 170° (see “Door opening limiters”). Make sure that there is sufficient space available and that the machine door is not going to hit an adjacent wall.

- Carry out a functional check on the coffee machine.

Door opening limiters

The coffee machine door hinges are equipped with door opening limiters that restrict the opening angle of the machine door to approx. 120°. This will prevent the machine door from hitting an adjacent wall and being damaged when opened.

The door opening limiters can be removed, allowing you to increase the opening angle to approx. 170°. This makes it easier to remove the bean containers, for example.

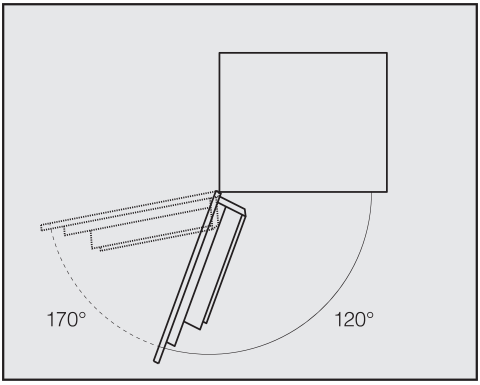

Removing the door opening limiters

Make sure that sufficient space is available for the larger door opening angle and that the machine door is not going to hit an adjacent wall.

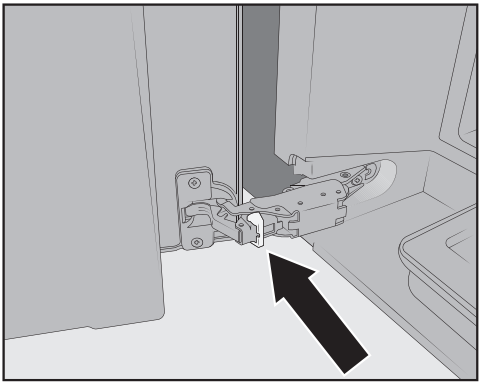

- Remove the door opening limiters from the hinges, e.g., by prizing them out with a screwdriver.

The machine door opening angle has now been increased to approx. 170°.

Electricity consumption in standby:	≤ 0.3 W
Electricity consumption in networked standby:	≤ 2.0 W
Frequency range	2.412 GHz – 2.462 GHz
Maximum transmitting power	< 100 mW

Copyrights and licenses

For the purpose of operating and controlling the communication module, Miele uses proprietary or third-party software that is not covered by open source licensing terms. This software/these software components are protected by copyright. The copyrights held by Miele and third parties must be respected.

In addition, the integrated communication module contains software components which are distributed under open source licensing terms. You can access these open source components along with the associated copyright notices, copies of the valid licensing terms, and any additional information locally via IP using a web browser (http[s]://<ip address>/Licenses). The liability and warranty arrangements for the open source licenses displayed in this location only apply in relation to the respective rights holders.



dal3491

Wi-Fi module EK057
Contains FCC ID: 2AC7Z-EK057
Contains IC: 21098-EK057

This device complies with Part 15 of the FCC Rules and with Industry Canada licence-exempt RSS standard(s). Operation is subject to the following two conditions: (1) this device may not cause harmful interference, and (2) this device must accept any interference received, including interference that may cause undesired operation.

This equipment complies with FCC radiation exposure limits set forth for an uncontrolled environment. This equipment should be installed and operated with minimum distance 8" (20 cm) between the radiator and your body. This device and its antenna(s) must not be co-located or operation in conjunction with any other antenna or transmitter.

Industry Canada Statement

This digital apparatus does not exceed the Class B limits for Radio Noise Emissions from digital apparatus set out in the Radio Interference Regulations of the Canadian Department of Communications.

Complies with Canadian ICES-003 Class B specifications.

Please have the model and serial number of your appliance available when contacting Customer Service.

U.S.A.

Miele, Inc.

National Headquarters
9 Independence Way
Princeton, NJ 08540
www.mieleusa.com

Customer Support
Phone: 888-99-MIELE (64353)
info@mieleusa.com

International Headquarters
Miele & Cie. KG
Carl-Miele-Straße 29
33332 Gütersloh
Germany

Canada

Importer
Miele Limited

Headquarters and Miele Centre
161 Four Valley Drive
Vaughan, ON L4K 4V8
www.miele.ca

Customer Care Centre
Phone: 1-800-565-6435
905-532-2272
contact@miele-support.ca

Miele

CVA 7445

en-US, CA

M.-Nr. 12 867 311 / 02 / 002