Miele

Operating instructions
Commercial dishwasher

PFD 404 / PFD 404 DOS

It is **essential** to read these operating instructions before installing and using the appliance. This will prevent both personal injury and damage to the machine.

en-AU, NZ

M.-Nr. 12 277 612

Contents

Notes about these instructions **6**
Symbols used on the commercial dishwasher 7
Definition of terms 7
Correct application **8**
Guide to the appliance **9**
Appliance overview 9
Control panel 10
LEDs in the sensors 11
Warning and Safety instructions **12**
Warning signs attached to the dishwasher 14
Disposal of your dishwasher 14
Caring for the environment **15**
User profiles **16**
User groups 16
User tips **17**
Switching on 17
Switching off 17
Standby/Off 18
Display screens 18
Touch display 18
Selection lists 18
Setting numerical values 18
Status window 19
System messages ℹ 19
Fault messages ⚠ 19
Commissioning **20**
Wi-Fi setup 20
Opening and closing the door **23**
Door lock 23
Comfort door lock 23
Pull-open lock 24
Filling the salt container **25**
Water hardness 25
Setting the water hardness 25
Salt refill indicator 27
Reactivation notification 27
Machine lock-out in case of lack of salt 27
Cleaning agent and rinsing agent **29**
Dispensing systems 29
Dispensing module 29
Cleaning agent 30
Filling the door dispenser 30
Tips for the Super short programme 31
Refill indicator 32
Replacing the canister 32
Dispensing liquid cleaning agent 32

Rinsing agent ... 33
Refill indicator ... 33
Filling the door dispenser ... 33
Refill indicator ... 34
Replacing the canister ... 34

Loading the dishwasher ... 35
Loading the dishwasher ... 35
We recommend ... 36
Upper basket ... 36
Adjusting the upper basket ... 37
Lower basket ... 38
Loading plastic trays ... 39

Operation ... 40
Switching on ... 40
Selecting a programme ... 40
Starting a programme ... 41
Starting the programme using a timer ... 41
Programme sequence display ... 42
End of the programme ... 42
Switching off ... 42
Unloading the dishwasher ... 42
Interrupting a programme ... 43
Cancelling a programme ... 44

Machine functions ... 45
Menu structure ... 45
Filter interval ... 46
Dispensing systems ... 46
Filling dispensing paths ... 46
Rinsing dispensing paths ... 47
Dry+ ... 48
Programme selection ... 48
Extension ... 48
AutoOpen ... 49
AutoClose ... 49

Settings ... 50
Menu structure ... 50
Time of day ... 51
Date ... 51
Display brightness ... 52
Volume ... 52
Welcome tone ... 53
Sensor reaction ... 53
Temperature unit ... 53

Further settings ... 54
Menu structure ... 54
Programme lock filter ... 56
Standby/Off ... 56
Log book ... 57
Programme release ... 57
Set favourites ... 58

Contents

Programme parameters ... 58
Selecting a programme ... 58
Main wash temperature ... 59
Main wash holding time ... 59
Final rinse temperature ... 59
Final rinse holding time ... 59
Increased water level ... 60
Changing names ... 60
Interim rinse ... 60
Resetting parameters ... 60
A0 value display ... 61
Dispensing systems ... 61
Selecting a dispensing system ... 61
Door dispenser ... 62
Activating dispensing from the canister ... 62
Deactivating dispensing from the canister ... 62
Dispensing concentration ... 63
Filling dispensing paths ... 63
Rinsing dispensing paths ... 63
Cycles until empty ... 63
DOS programme lock ... 64
Water hardness ... 64
Reactivation notification ... 64
Memory ... 65
PIN code ... 65
Entering the PIN code ... 65
Blocking further settings or making them available ... 66
Changing a PIN code ... 66
Safe mode ... 67
Exiting safe mode or adjusting settings while in safe mode ... 67
Door lock code ... 68
Networking/Wi-Fi ... 68
Wi-Fi setup ... 68
Connection via WPS ... 69
Soft AP ... 69
Connecting via Soft AP ... 69
RemoteUpdate ... 70
Showroom programme ... 70
Software version ... 70
Data plate ... 70
Factory default settings ... 71
Legal information ... 71

Cleaning and care ... 72
Maintenance ... 72
Wipe lock ... 72
Cleaning the control panel ... 72
Cleaning the appliance front ... 73
Cleaning the wash cabinet ... 73
Cleaning the door and the door seal ... 73
Cleaning filters in the wash cabinet ... 73

Changing the air filter (depending on the model) ... 75
Removing the plastic support ... 75
Replacing the filter ... 75

Problem solving guide ... **76**
Technical problems ... 76
Faults with water intake or drainage ... 77
Cancel with fault code ... 78
Door ... 80
General problems with the dishwasher ... 81
Noises ... 82
Unsatisfactory washing result ... 83

Maintenance ... **85**
Cleaning the water inlet filter ... 85
Cleaning the drain pump and non-return valve ... 85

Programme chart ... **86**

After sales service ... **88**

Installation ... **89**
Installation ... 89
Built-under installation ... 89
Hose holder ... 89
Adjustable plinth panel (depending on the model) ... 90
Levelling and securing the dishwasher ... 91
Moving the dishwasher ... 91

Electrical connection ... **92**
Peak load cut-out ... 92

Water connection ... **93**
Connecting the water inlet ... 93
Connecting the drain hose ... 94

Technical data ... **95**

Warnings

⚠ Warnings contain information which is important for safety. This alerts you to the potential danger of injury to people or damage to property.
Read these warning notes carefully and observe the procedural instructions and codes of practice they describe.

Notes

Notes contain information of particular importance that must be observed.

Additional information and comments

Additional information and comments are contained in a box with a simple frame.

Operating steps

Instructions on operation are identified by specially marked procedural instructions. They explain the procedure step by step. Operating steps are indicated by a black square bullet point.

Example:

■ Open the door.

Display

Information that is shown in the commercial dishwasher display appears in a special font similar to the display text.

Example:

Select ⚙ Settings and confirm your choice with *OK*.

Symbols used on the commercial dishwasher

Symbol	Key
	For warnings, see “Warnings and Safety instructions”
	VDE symbol
	EMC symbol of the VDE
	Do not dispose of electrical appliances in household waste; they need to be disposed of separately (see “Disposal of your old machine”)
	CE marking of the EU The corresponding declaration of conformity is enclosed with the machine and can be obtained from the manufacturer.
	Manufacturer

Definition of terms

Dishwasher The commercial dishwasher is referred to as a dishwasher in these operating instructions.

Load items The term “load items” is used wherever the items to be reprocessed are not defined in any further detail.

Wash water The term “wash water” refers to water or to a mixture of water and process chemicals.

Process chemicals All media dispensed during a programme sequence are generally referred to as process chemicals, e.g. cleaning agents.

Cycle Machine-based cleaning and reprocessing procedures are generally referred to as cycles.

Correct application

▶ This Miele dishwasher with its short programme running times and powerful cleaning performance is intended for commercial use, for example in:

- Retirement and nursing homes
- Hospitals (only dishwashers with the Vario TD programme)
- Restaurants and pubs
- Hotels and guesthouses
- Similar commercial environments

▶ The commercial dishwasher is subsequently referred to as a dishwasher in these operating instructions. The items that can be washed in the commercial dishwasher, such as plates, cups, glasses and cutlery, are generally referred to in these operating instructions as load items when they are not defined in more detail.

▶ This machine is designed exclusively for use as a “dishwasher” for cleaning loads as described in these instructions. Conversions, modifications and any other use are not permitted.

▶ This dishwasher is intended for stationary, indoor use only.

▶ The special inserts in the baskets should only be used for their specific application.

▶ This dishwasher may not be used to clean medical products or devices.

▶ This dishwasher can only be used by people with reduced physical, sensory or mental capabilities, or lack of experience or knowledge, if they are supervised whilst using it or have been shown how to use it in a safe way and understand and recognise the consequences of incorrect operation.

▶ In the case of commercial dishwashers, they must only be operated by appropriately trained personnel. They must be instructed and trained regularly.

▶ Children should be supervised in the vicinity of the dishwasher. Do not let children play with the dishwasher. There is a danger that children might shut themselves in the dishwasher.

▶ Children must not use the dishwasher.

Appliance overview

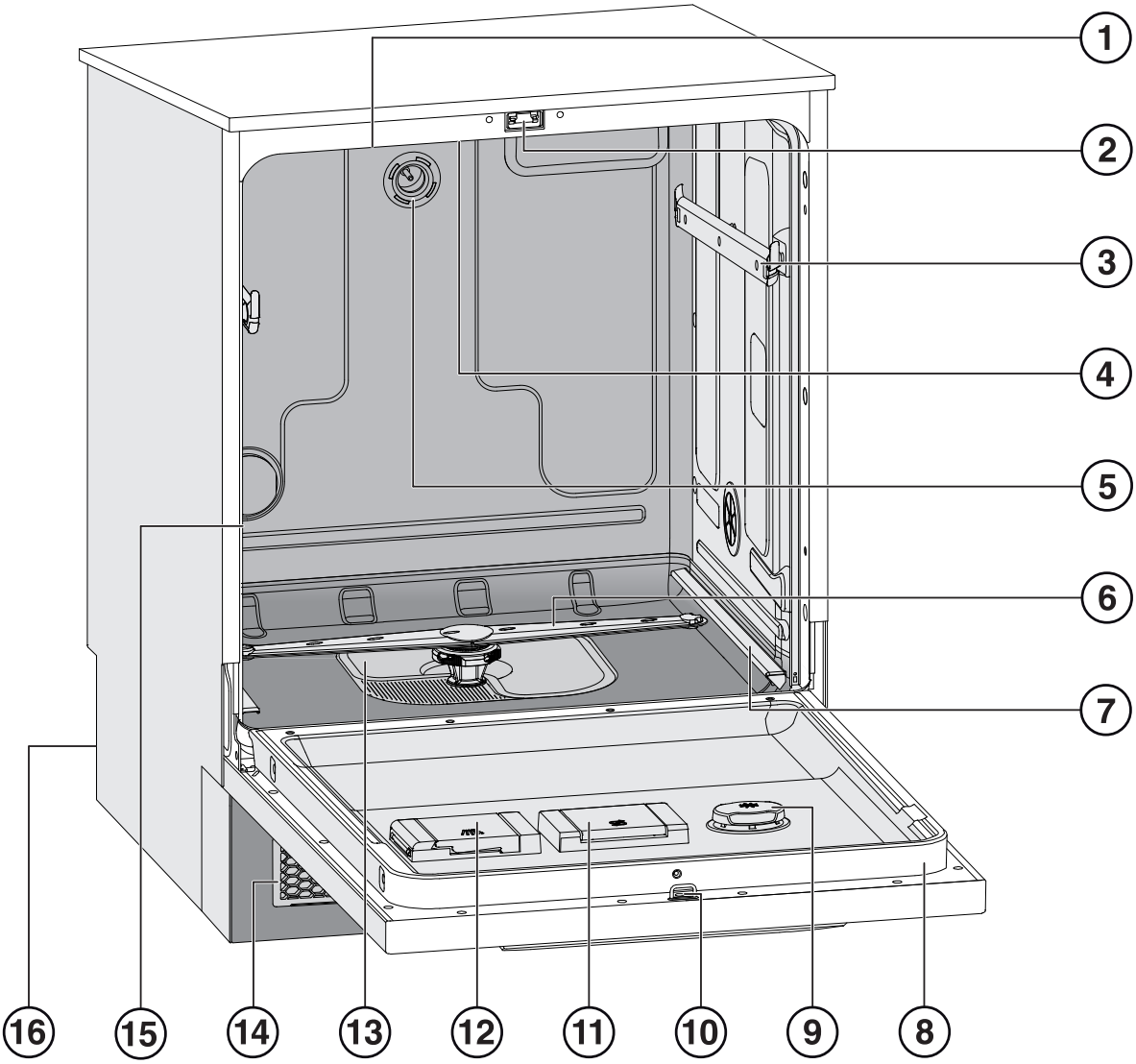

① Air inlet for fresh air (depending on the model)

② Door lock

③ Upper basket runners

④ Top machine spray arm

⑤ Upper basket water connection

⑥ Lower machine spray arm

⑦ Lower basket runners

⑧ Data plate

⑨ Rinsing agent reservoir

⑩ Door lock latch

⑪ Salt reservoir

⑫ Container for powder cleaning agents

⑬ Filter combination

⑭ Air outlet and inlet grille with filter for fresh air (depending on model)

⑮ Outlet for wash cabinet air (depending on model)

⑯ Rear:

- Electrical and water connections
- Suction lance(s) for external containers (depending on model)
- Connections for external dispensing modules (DOS modules)

Control panel

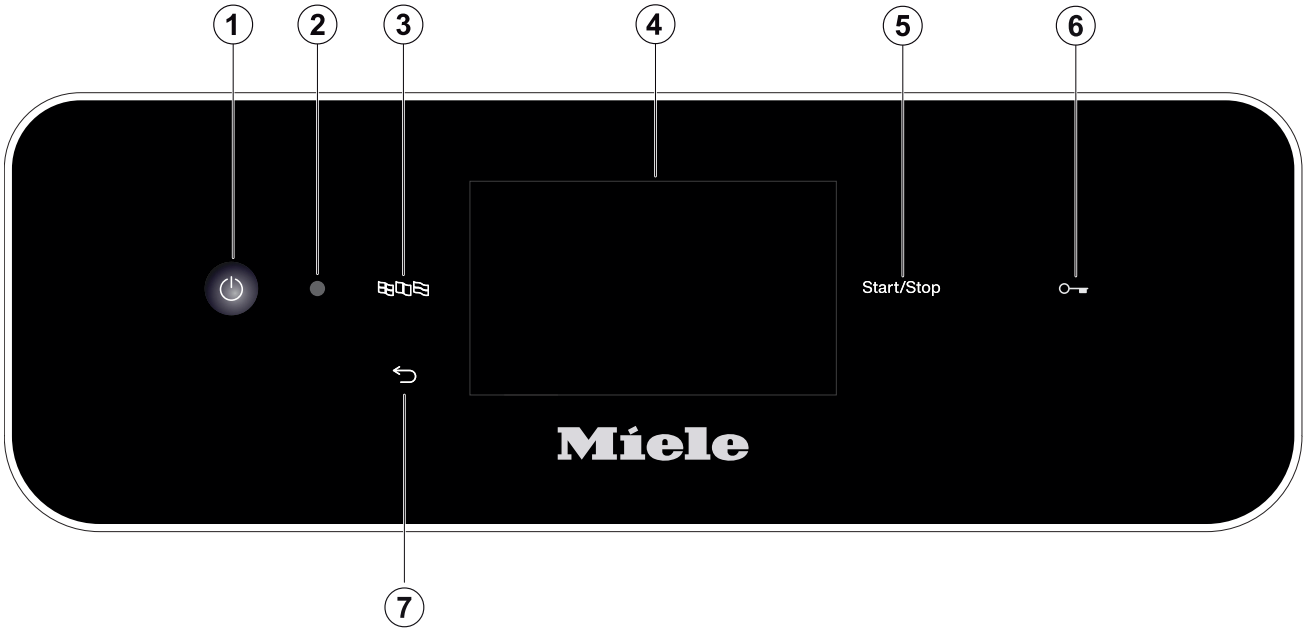

① ⏻ On/Off sensor
For switching the dishwasher on and off

② Service interface
Testing and transmission point for Miele Customer Service

③ sensor (language selection)
For selecting the display language

④ Touch display
For displaying and selecting control elements

⑤ *Start/Stop* sensor
For starting or cancelling a programme

⑥ (Depending on model)
sensor (door release)
For opening the door

⑦ sensor (cancel or back)
For cancelling a process in the user interface (not for cancelling programmes)

LEDs in the sensors

Light-emitting diodes are incorporated into the sensors. They indicate the status of the dishwasher.

Sensor	LED	Display	Status
Display (Reaction to ⏻ On/ Off sensor)		**ON**	The dishwasher is switched on.
		OFF	The dishwasher is switched off.
Start/Stop sensor	**Pulsing**	**OFF**	The dishwasher is in standby mode.
		ON	A programme has been selected but not yet started.
		ON	A message has appeared in the display.
	Flashes red		A fault has occurred (see the fault message in the display and the “Problem solving guide”).
	ON		A programme is running.
	OFF		A programme has finished.
(Depending on model)			
⊶ sensor (door sensor)	**ON**		A programme has been selected but not yet started.
			A programme is running.
	FLASHES		A programme is finished and the door is closed.

Correct installation

▶ Do not install this dishwasher in an area where there is a risk of explosion or freezing conditions.

▶ To ensure the stability of built-under dishwashers, they must only be installed beneath a continuous worktop that is bolted to the adjacent cabinetry.

▶ In order to reduce the risk of damage from condensation, the furniture in the area around the dishwasher should be designed for commercial use.
Furniture can be protected using the vapour protection set, which is available as an optional accessory.
The vapour barrier film needs to be adhered to the underside of the worktop in the area around the dishwasher door.

Technical safety

▶ This dishwasher must only be installed, commissioned, repaired and maintained by Miele Professional Service or a suitably qualified service technician. Unauthorised installation, maintenance and repairs can pose a considerable risk to the user.

▶ In the case of commercial dishwashers, they must only be operated by appropriately trained personnel. They must be instructed and trained regularly.

▶ Before using the dishwasher, check it for any externally visible damage. Under no circumstances should you use a damaged appliance. A damaged appliance could be dangerous.

▶ In the event of a damaged or leaking dishwasher, switch off at the power supply immediately and call Miele Professional Service.

▶ Faulty components must only be replaced by genuine Miele original spare parts. Only when these parts are fitted can Miele guarantee the safety standards of the appliance.

▶ The electrical safety of this dishwasher can only be guaranteed when continuity is complete between it and an effective earthing system. If in any doubt, please have the electrical installation tested by a qualified electrician.

▶ Please follow the advice on installation in these operating instructions and the installation plan.

▶ Before connecting the dishwasher, ensure that the connection data on the data plate (voltage, frequency and fuse rating) match the mains electrical supply.

▶ There must be no electrical sockets behind the dishwasher. There is a danger of overheating and risk of fire if the dishwasher were to be pushed up against a plug. See “Electrical connection”.

▶ Do not connect the dishwasher to the mains electricity supply by a multi-socket unit or an extension lead. These do not guarantee the required safety of the appliance (e.g. danger of overheating).

▶ Never open the casing of the appliance. Tampering with electrical connections or components and mechanical parts is highly dangerous to the user and can cause operational faults.

▶ The dishwasher must not be used if the electrical connection cable is damaged. A damaged connection cable may only be replaced by a suitable connection cable of the same type. For safety reasons, such replacement may only be carried out by Miele Professional Service or a Miele authorised technician.

▶ If the appliance is hard-wired, the means of disconnection must be incorporated in the fixed wiring in accordance with the wiring rules AS/NZS 3000.

▶ This dishwasher must be disconnected from the mains electricity supply before any maintenance or repair work is carried out.

▶ The plastic housing of the water connection contains two electrical components. It must not be dipped in water.

▶ There are electrical wires in the water inlet hose. Do not cut the hose, even if it is too long.

▶ In areas which may be subject to infestation by cockroaches or other vermin, pay particular attention to keeping the appliance and its surroundings in a clean condition at all times. Any damage which may be caused by cockroaches or other vermin will not be covered by the warranty.

Correct use

▶ This dishwasher is designed for operation with water and cleaning agents suitable for use in commercial dishwashers only. Organic solvents and flammable liquid agents must not be used in it.
This could cause an explosion, damage rubber or plastic components in the dishwasher and cause liquids to leak out of it.

▶ Only use cleaning agents which are suitable for use in a dishwasher. Unsuitable cleaning agents could adversely affect components of the dishwasher or the load items.

▶ Do not sit, stand or lean on the opened door. The dishwasher may tip or be damaged.

▶ After any plumbing work, the water pipework to the dishwasher will need to be vented. If this is not done, components can be damaged.

▶ Please be aware that the dishwasher may be operating at high temperatures. When the door is opened there is a danger of burning or scalding. Items, baskets and inserts must be allowed to cool down before they are unloaded. Any water remaining in containers could still be very hot. Empty them into the wash cabinet before taking them out.

▶ The water in the wash cabinet must not be used as drinking water.

▶ Pre-treating items (for example with washing-up liquid and other cleaning agents) as well as some types of soiling and some cleaning agents can cause a build-up of foam in the wash cabinet. Foam can have an adverse effect on the cleaning result.

▶ Foam escaping from the wash cabinet can cause damage to the dishwasher. If foam escapes, the programme must be cancelled immediately and the machine must be disconnected from the mains electrical supply.

▶ Depending on the properties of the flooring and footwear worn on it, liquids can cause a slipping hazard. As far as possible, please keep the floor dry and remove any liquids immediately using suitable materials. Appropriate protective measures are to be employed when removing hazardous substances and hot liquids.

▶ The water pressure must be between 200 kPa and 1000 kPa.

▶ When using cleaning agents and specialised products, it is essential that the manufacturer's instructions are followed. Cleaning agents must only be used for the purpose they are designed for by the manufacturer to avoid any material damage or the occurrence of strong chemical reactions (e.g. oxyhydrogen explosion).

▶ To avoid material damage and corrosion, do not allow any acids or solutions containing chloride to get into the wash cabinet or onto the casing. Similarly avoid any ferrous materials with a corrosive effect.

▶ Do not wash items soiled with ash, sand, wax, lubricating grease or paint in the dishwasher. These materials will cause damage to the dishwasher.

▶ Do not hose the dishwasher or near vicinity down to clean it, e.g. with a hose or a pressure washer.

▶ Do not clean the dishwasher with a water jet.

▶ New hose sets supplied with the appliance are to be used. Old hose sets should not be re-used.

▶ Ensure that the outer casing of the machine does not come into contact with solutions or steam containing acid to avoid any corrosion damage.

▶ Be careful when sorting items with sharp pointed ends and positioning them in the dishwasher that you do not hurt yourself or create a danger for others. Knives and other utensils with sharp points must be loaded with the pointed end facing downwards or placed in a horizontal position.

▶ The ventilation grille of dishwashers with active drying must not be blocked or sealed.

Accessories

▶ Only use genuine Miele original spare parts and accessories with this dishwasher suitable for the application they are required for. Consult Miele for details on the type of accessories that can be used.

▶ Only use Miele baskets and inserts. Using baskets and inserts made by other manufacturers, or making modifications to Miele accessories can cause unsatisfactory cleaning results. Any resultant damage would not be covered by the guarantee.

Warning signs attached to the dishwasher

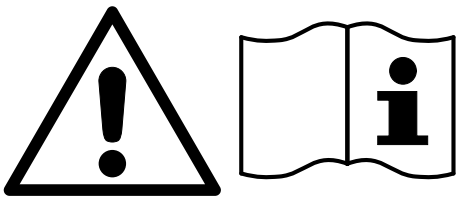

Warning:
Observe the operating instructions!

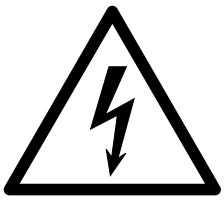

Warning:
Danger of electric shock!

Warning: Hot surfaces:
It can be very hot inside the wash cabinet when the door is opened!

Risk of being cut:
Wear cut-resistant protective gloves when transporting and setting up the machine!

Disposal of your dishwasher

▶ For safety and environmental reasons, dispose of all process chemicals according to the manufacturer's instructions and safety regulations. Safety goggles and protective gloves should be worn.

▶ Render the door lock inoperable to prevent children from accidentally locking themselves inside the machine. Ensure a safe removal and proper disposal of the dishwasher (see “Caring for the environment”).

Disposal of the packing material

The packaging material is used for handling and protects the appliance from transport damage.

Recycling the packaging reduces the use of raw materials in the manufacturing process and also reduces the amount of waste in landfill sites. Ensure that any plastic wrappings, bags etc. are disposed of safely and kept out of the reach of babies and young children. Danger of suffocation.

Only for Australia: Note for installer: Expanded polystyrene (EPS) packaging included. Please retain and dispose of EPS packaging responsibly. For further information, please contact Miele.

Disposing of your old appliance

Electrical and electronic appliances often contain valuable materials. They also contain specific materials, compounds and components, which were essential for their correct function and safety. These could be hazardous to human health and to the environment if disposed of with your domestic waste or if handled incorrectly. Please do not, therefore, dispose of your old appliance with your household waste.

Please dispose of it at your local community waste collection / recycling centre for electrical and electronic appliances. You are also responsible for deleting any personal data that may be stored on the appliance prior to disposal. Please ensure that your old appliance poses no risk to children while being stored prior to disposal.

User profiles

User groups

Users can be divided into two groups:

- **Daily operators**

  Daily operators must be instructed on operating and loading the dishwasher and trained regularly to guarantee safe daily use.

- **Experienced operators**

  Experienced operators can additionally block access to programmes and modify programme parameters. These functions are stored in a PIN code-protected area of the control unit.

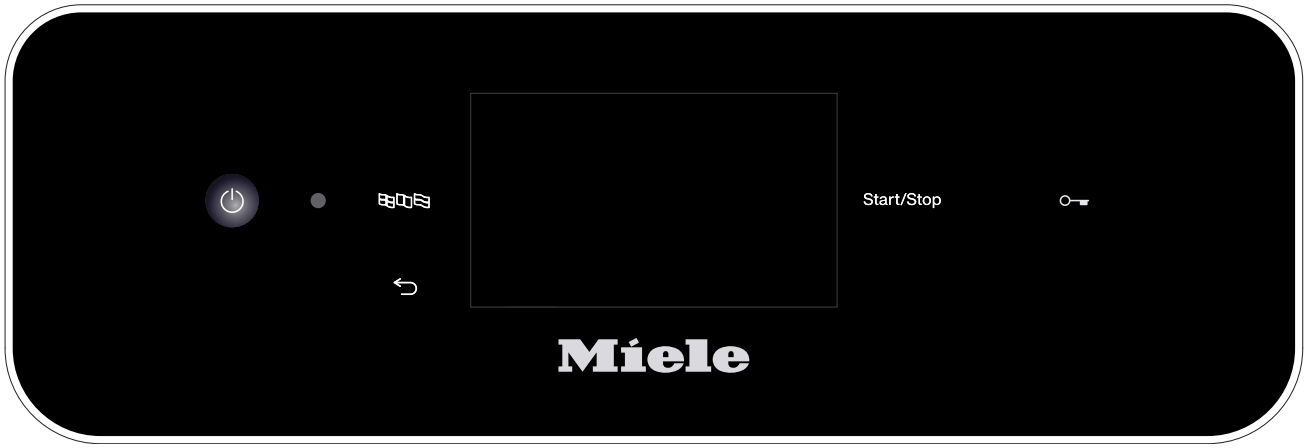

Operation

Operation is carried out via the touch display as well as via the sensors on the control panel.

The sensors on the control panel and in the display react to fingertip contact. Every touch on the sensors is confirmed by a keypad tone. You can adjust the volume of the keypad tone or switch it off (see “Settings/Volume”).

The control panel with sensors and the touch display can be scratched by pointed or sharp objects, e.g. pens.
Only touch the control panel with your fingers.

Switching on

The dishwasher needs to be connected to the electricity supply.

- Press and hold the ⏻ sensor until the following appears in the display:

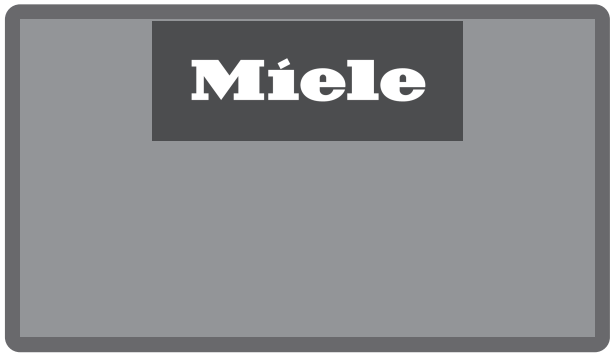

As soon as the dishwasher is ready for operation, the display message changes to show the programme selection screen, e.g.:

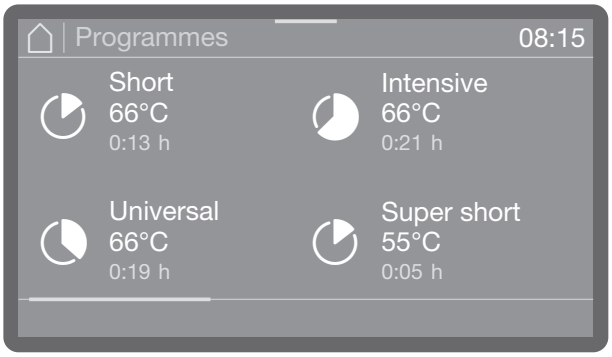

If the Memory function is activated, the most recently started programme is displayed, e.g.:

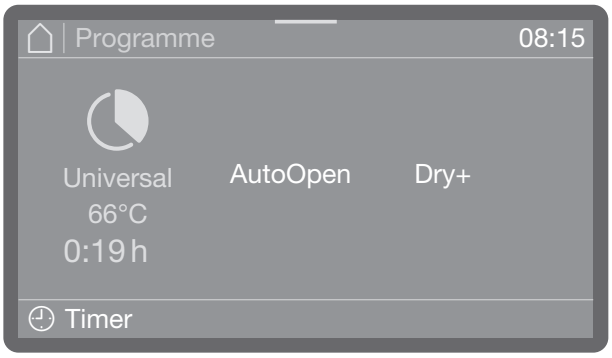

Switching off

- Press the ⏻ sensor.

The dishwasher remains in standby mode for about one minute before it switches off completely.

Standby/Off

If the dishwasher has not been used for 10 minutes, it can be set to standby or switched off automatically.

In standby mode, the dishwasher remains switched on and the *Start/Stop* sensor flashes. The dishwasher can be reactivated by pressing the *Start/Stop* sensor, touching the display or opening the door.

After automatic switch-off, the dishwasher is switched off and can be switched on again by pressing the ⏻ sensor.

Display screens

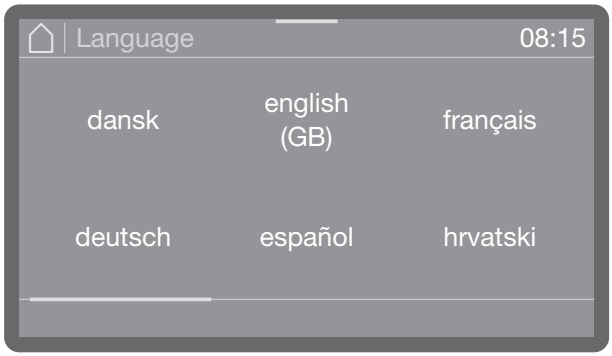

All display screens shown in these operating instructions are examples, which can be different from the actual display screens.

Touch display

Selection lists

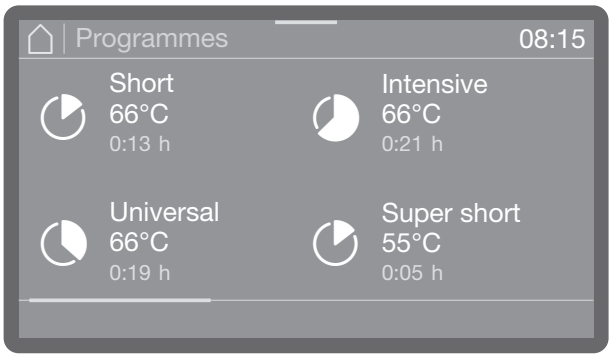

You can scroll to the right or left by swiping your finger across the screen. To do this, place your finger on the touch display and swipe it in the direction you want.

The coloured scroll bar shows that there are further options to choose from.

Setting numerical values

Numerical values can be entered in 2 different ways.

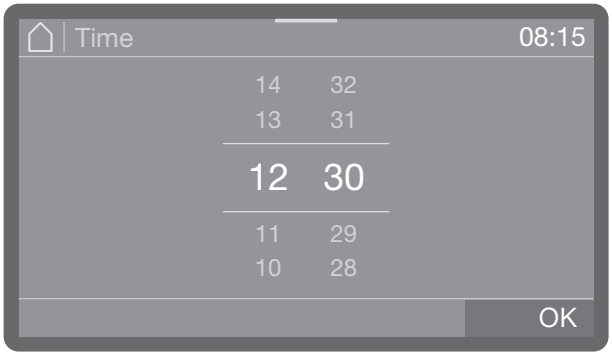

Firstly, you can place a finger on the numbers highlighted in colour and change them by swiping up or down.

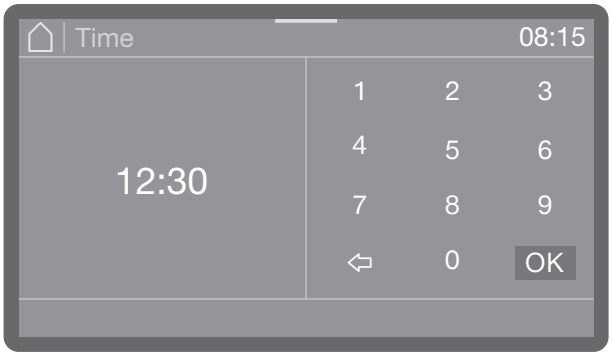

Secondly, you can call up a numerical keypad by briefly tapping the numbers highlighted in colour and then entering the numbers directly.

Depending on the context, numbers entered directly may be rounded up or down. If, for example, it is only possible to enter values in increments of 10 (10, 20, 30, etc.), the value is rounded down to 10 when you enter 12, and rounded up to 20 when you enter 15.

Status window

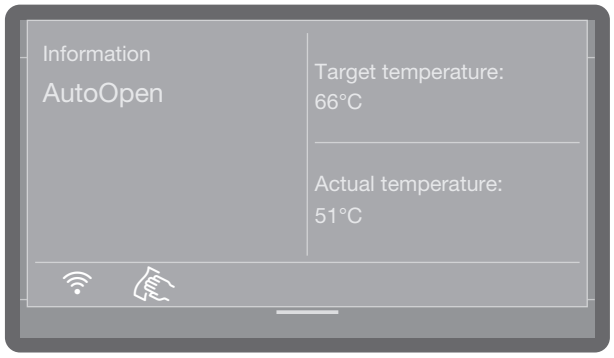

A coloured bar is shown at the top of the display. If you tap this and drag it down, a status window opens. You can use this to display various status messages, e.g. about the programme in progress.

System messages ℹ

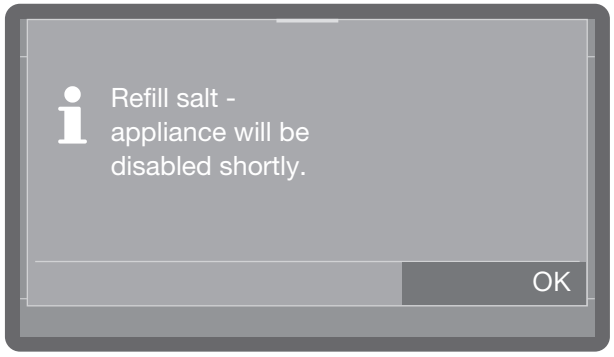

The ℹ symbol denotes system messages. These give information about current processes and the status of the machine. System messages are displayed at the end of the programme. If there is more than one system message, they are shown one after the other and must be acknowledged individually by pressing OK.

Show me how

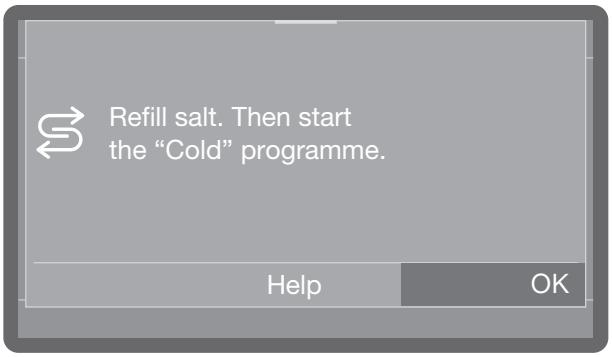

If you are notified of a fault or defect when switching on the machine or at the end of a programme and the Help sensor is presented to you, you can tap the Help sensor to be guided through the individual steps to be carried out in order to eliminate the fault or defect.

Fault messages ⚠

In the event of a fault, a warning symbol ⚠ appears in the display and the *Start/Stop* sensor flashes red in rapid succession. If buzzer tones are activated, a warning tone will also sound.

- Acknowledge the fault by tapping on the warning symbol. Then follow the instructions in the display and in the “Problem solving guide”.

Installation and connection

Before commissioning, the dishwasher must be securely installed, and the water inlet and drain hoses and the mains connection cable correctly connected. Follow the instructions in “Installation”, “Water connection” and “Electrical connection” as well as in the installation plan.

Procedure

The commissioning process follows a set procedure which cannot be interrupted.

All settings, except for water connections, can be retrospectively altered via the Machine functions, Settings and Further settings menus.

Switching on

- Press the ⏻ sensor.

Selecting a language

Commissioning starts with the selection of the display language.

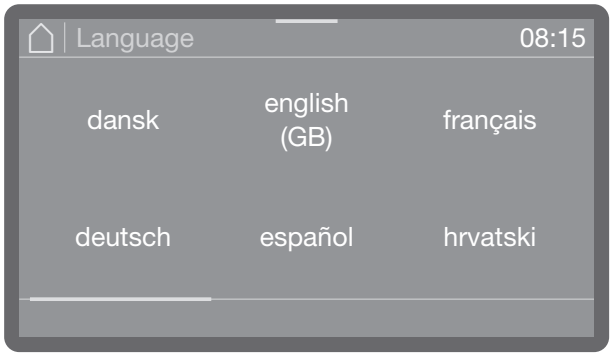

- Scroll to the language you want and select it by tapping on it.

Wi-Fi setup

In the next step, you can connect your dishwasher to the Wi-Fi network.

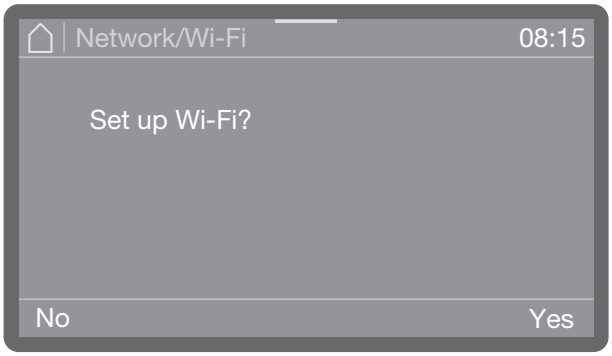

- Select No if you do not want to integrate the dishwasher into the Wi-Fi network or want to do it later.
- If you select Yes, the next steps will guide you through the process to set this up. Please refer to “Further settings - Networking/Wi-Fi”.

Setting the date

- Set the date. The order of year, month and day is the same regardless of the date format set.
- Press OK to save the setting.

Setting the time of day

The time of day is set in the set time of day format.

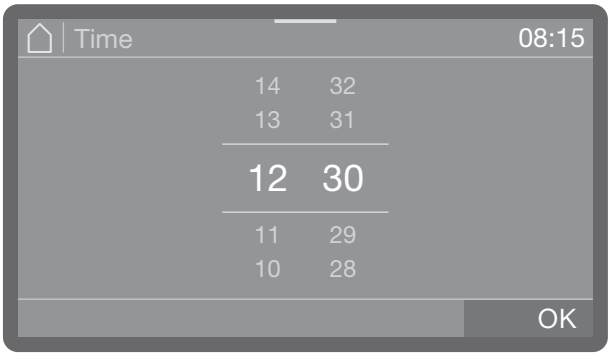

- Set the time of day and confirm your entry with OK.

Setting the temperature unit

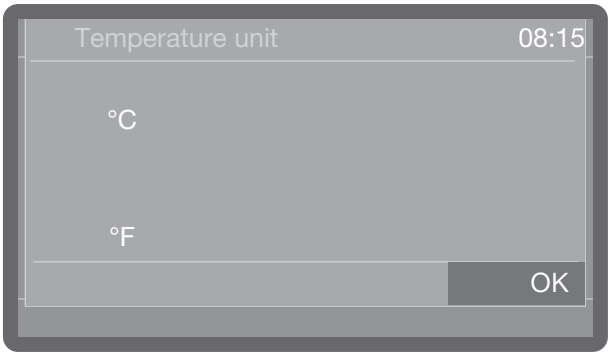

- °C

  Temperature display in Celsius.

- °F

  Temperature display in Fahrenheit.

- Select the temperature unit you want and confirm your selection with OK.

Setting the water hardness

Your local water authority can give you information about the exact water hardness in your area.

With varying water hardness, always set the highest level. If the water hardness fluctuates between, for instance, 1.4 and 3.1 mmol/l (8 and 17 °dH), the water hardness must be set to 3.1 mmol/l (17 °dH).

The water hardness setting values can be found in the chart in “Filling the salt container”.

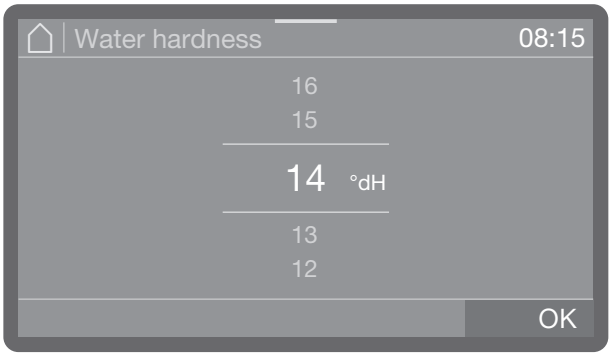

- Set the water hardness.
- Press OK to save the setting.

In the event of a fault, it will help the service technician if you know the hardness of your local water supply. Document the water hardness in “Filling the salt container”.

Selecting water connections

All available water connections are activated in the control system ex works. Individual water connections can be subsequently deactivated, e.g. if no connection options are available for them.

Following commissioning, the water connections can be reinstated by Miele Customer Service.

■ Select one of the available water connections, e.g.:

- Hot water

Hot water connection

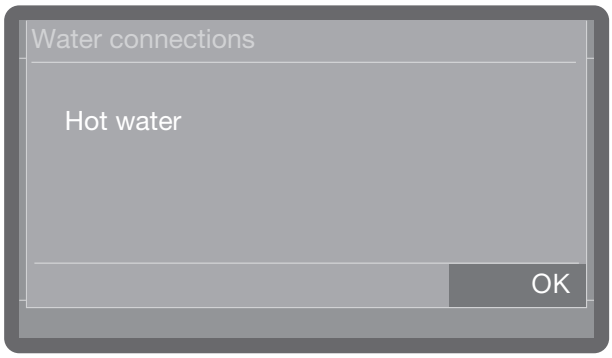

The activated water connection is highlighted in colour. Tapping the connection removes the colour and permanently deactivates the water connection.

■ Select OK to confirm your selection.

Commissioning completed

Your machine has been successfully set up once you see the following message.

■ Confirm the message with OK.

The dishwasher is now ready for operation.

Door lock

Depending on the model, the dishwashers are equipped with a comfort door lock with electronic door locking or a pull-open lock. Dishwashers with a comfort door lock have a door sensor on the control panel. This sensor is not available on machines with a pull-open lock.

Comfort door lock

The door of the wash cabinet is equipped with a Comfort door locking mechanism. When the door is closed, the Comfort door locking mechanism automatically pulls the door into the closed position and thus ensures it is sealed. The door is locked electronically.

For opening the door

A door that has been locked electronically can be opened under the following circumstances:

- The machine is connected to the power supply and switched on (the LED is lit up)
- The LED is lit.

■ Press the sensor to open the door.

If the temperature in the wash cabinet exceeds 67 °C, a message is shown in the display: Hot wash cabinet: risk of injury. Take care when opening the door..
Press the sensor again to open the door.

The comfort door lock opens the door slightly. The LED in the sensor goes out as soon as the door is unlocked.

The dishwasher's control panel is also a door handle.

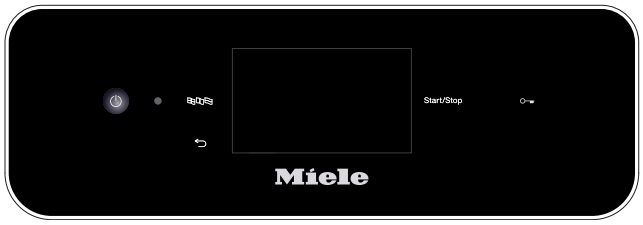

■ Grasp the handle underneath the control panel and pull the door down to open it.

Closing the door

■ Make sure that no objects or load items protrude into the closing area of the door.

⚠ Risk of injury caused by crushing.
Do not put your hand inside the door as it is closing. Risk of crushing.

■ Raise the door upwards until the catch engages.

The door will be drawn into its final close position if the AutoClose function is activated (see "AutoClose").

Opening the door using the emergency release

The emergency release may only be used when it is no longer possible to open the door normally, e.g. in the event of a power failure.

⚠ Danger of scalding, burning and chemical burns!
If the emergency release is operated during a programme sequence, hot water and process chemicals can escape.
Only open the door using the emergency release when strictly necessary.

The emergency release mechanism is located on the right beside the door lock in the gap between the door and the lid of the machine or the worktop.
There should be 1 cm between the right edge of the tool and the right edge of the display.

■ Press against the door to release the emergency release mechanism.

■ Insert the tool from the companion pack horizontally into the gap between the door and the lid or worktop.

- Press the tool against the release mechanism until you hear the door open. Continue to press the tool against the release mechanism and fully open the door.

If the machine is switched on, the following message is shown in the display when the emergency release is triggered:

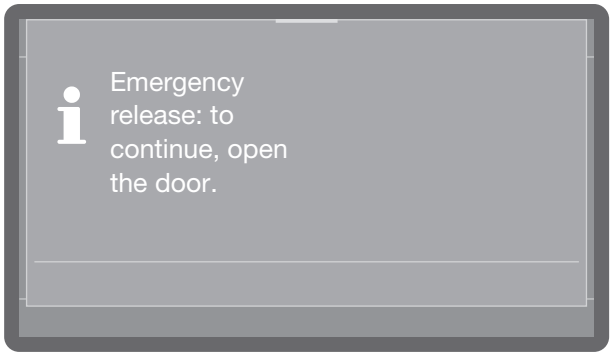

The message is acknowledged when the door is closed.

Pull-open lock

In the case of dishwashers with a pull-open lock, the door can be opened at any time, even during a programme sequence. In the latter case, special caution is needed.

Opening the door

⚠ Danger of scalding, burning and chemical burns!
If the door is opened during a programme sequence, hot water and process chemicals can escape. The programme in progress is also interrupted and, under certain circumstances, even cancelled.
Only open the door when no programmes are running.

The dishwasher control panel also serves as a door handle.

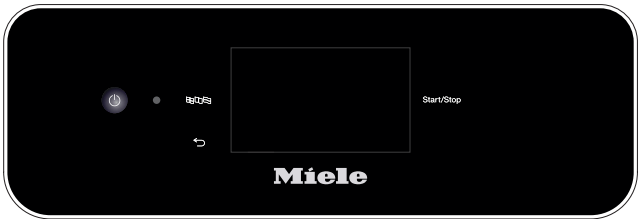

- Grasp the handle underneath the control panel and pull the door down to open it.

Closing the door

- Make sure that no objects or load items protrude into the closing area of the door.

⚠ Risk of injury caused by crushing.
Do not put your hand inside the door as it is closing. Risk of crushing.

- Raise the door upwards until the catch engages.

Water hardness

In order to achieve excellent cleaning results, the machine requires a supply of soft water with a low calcium content. Hard mains water results in the build-up of calcium deposits on the load items and on the wash cabinet walls.

Mains water with a water hardness of 0.7 mmol/l (4 °dH) or more must be softened. This occurs automatically during a programme sequence in the built-in water softener.
The water softener must be set to the exact hardness of the mains water (see “Setting the water hardness”).

Your local water authority can give you information about the exact water hardness in your area.

In the event of a fault, it will help the service technician if you know the hardness of your local water supply. Record the hardness of the mains water here:

_____mmol/l or °dH

The water softener must be reactivated at regular intervals. Special dishwasher salt is required for this. Reactivation is carried out automatically during a programme sequence.

If the hardness level of your water is consistently less than 0.7 mmol/l (= 4 °dH), salt is not required for the water softener. However, the water hardness level must still be set.

Setting the water hardness

Water hardness can be set between 0 and 12.5 mmol/l (0–70 °dH).

The water hardness is preset to 2.5 mmol/l (14 °dH) ex works.

With varying water hardness, always set the highest level. If the water hardness fluctuates between, for instance, 1.4 and 3.1 mmol/l (8 and 17 °dH), the water hardness must be set to 3.1 mmol/l (17 °dH).

Water hardness setting values can be found in the chart on the next page.

The menu is saved under the following input path.

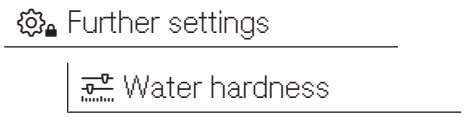

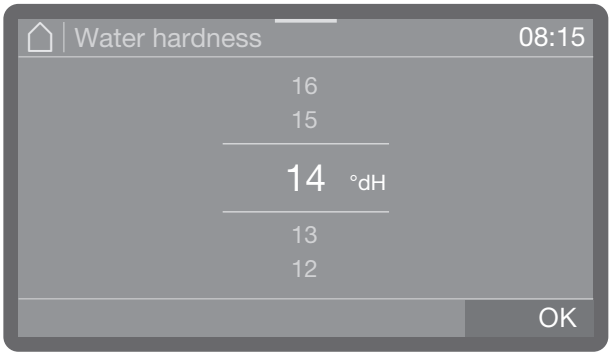

- Set the water hardness.
- Press OK to save the setting.

Filling the salt container

Settings table

°dH	°f	mmol/l	Display
0	0	0	**0**
1	2	0.2	**1**
2	4	0.4	**2**
3	5	0.5	**3**
4	7	0.7	**4**
5	9	0.9	**5**
6	11	1.1	**6**
7	13	1.3	**7**
8	14	1.4	**8**
9	16	1.6	**9**
10	18	1.8	**10**
11	20	2.0	**11**
12	22	2.2	**12**
13	23	2.3	**13**
14	**25**	**2.5**	**14 *)**
15	27	2.7	**15**
16	29	2.9	**16**
17	31	3.1	**17**
18	32	3.2	**18**
19	34	3.4	**19**
20	36	3.6	**20**
21	38	3.8	**21**
22	40	4.0	**22**
23	41	4.1	**23**
24	43	4.3	**24**
25	45	4.5	**25**
26	47	4.7	**26**
27	49	4.9	**27**
28	50	5.0	**28**
29	52	5.2	**29**
30	54	5.4	**30**
31	56	5.6	**31**
32	58	5.8	**32**
33	59	5.9	**33**
34	61	6.1	**34**
35	63	6.3	**35**

°dH	°f	mmol/l	Display
36	65	6.5	**36**
37	67	6.7	**37**
38	68	6.8	**38**
39	70	7.0	**39**
40	72	7.2	**40**
41	74	7.4	**41**
42	76	7.6	**42**
43	77	7.7	**43**
44	79	7.9	**44**
45	81	8.1	**45**
46	83	8.3	**46**
47	85	8.5	**47**
48	86	8.6	**48**
49	88	8.8	**49**
50	90	9.0	**50**
51	91	9.1	**51**
52	93	9.3	**52**
53	95	9.5	**53**
54	97	9.7	**54**
55	99	9.9	**55**
56	100	10.0	**56**
57	102	10.2	**57**
58	104	10.4	**58**
59	106	10.6	**59**
60	107	10.7	**60**
61	109	10.9	**61**
62	111	11.1	**62**
63	113	11.3	**63**
64	115	11.5	**64**
65	116	11.6	**65**
66	118	11.8	**66**
67	120	12.0	**67**
68	122	12.2	**68**
69	124	12.4	**69**
70	125	12.5	**70**

*) Factory setting

Salt refill indicator

If the level in the salt container is low and a reactivation is carried out, the following message appears in the display:

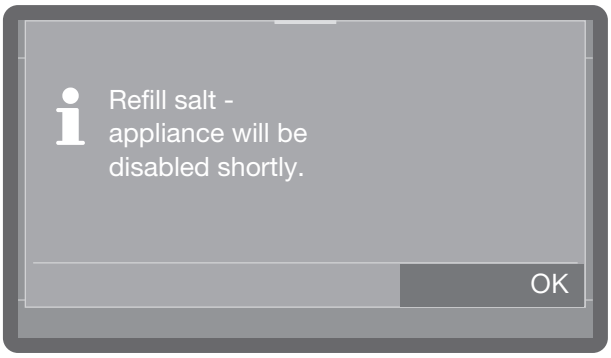

- Confirm the message with *OK*.
- Fill the salt container as described.

If the message is being displayed for the first time, further programme cycles may be possible depending on the set water hardness. If no salt is added, the message is displayed again at the end of every programme.

Reactivation notification

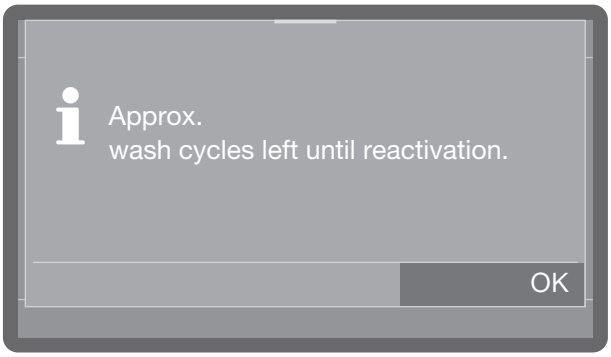

You can set how many cleaning cycles in advance you want to be notified of the upcoming reactivation (see “Further settings – Reactivation notification”).

Machine lock-out in case of lack of salt

If the salt in the water softener has been used up, a fault appears in the display and the machine is blocked from performing further applications.

Acknowledge the fault by tapping on the warning symbol. Then follow the instructions in the display:

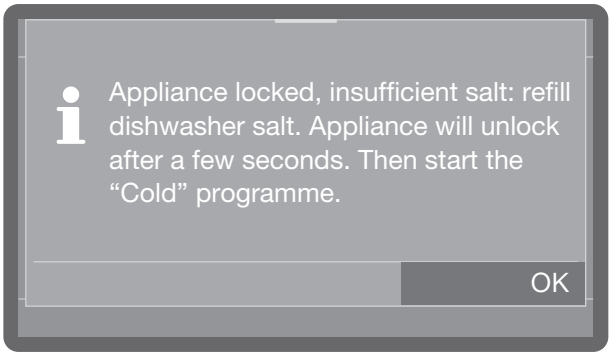

- Fill the salt container as described.

The machine lock is lifted with a delay of a few minutes once salt has been added.

Filling the salt container

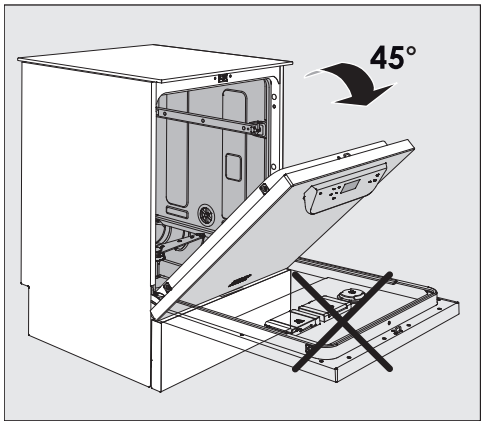

- When filling the salt container, **only open the door halfway** to ensure that all the salt gets into the container.

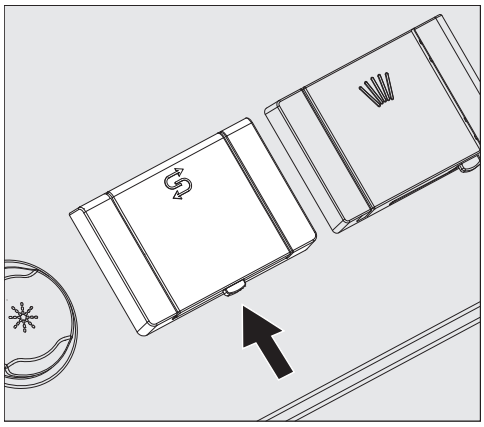

- Press the button on the lid of the salt container in the direction of the arrow. The access panel will spring open.
- Open the funnel.

Do **not** pour any water into the salt container!

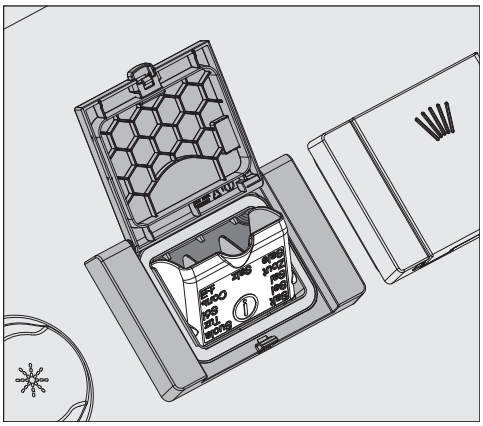

- Add salt into the container until the funnel is full but still closes easily. The salt container will take approx. 2 kg of salt on the first fill depending on the degree of coarseness.
  Subsequent refills may take less salt, as there may still be salt remaining in the container.

If there is water present in the container, it may be forced out by the added salt.

- Clean any excess salt from around the container opening and the seal surrounding it, and then close the flap.
- To avoid corrosion in the wash cabinet, run the Cold programme (without any load items) immediately after refilling the salt container. This will dilute and rinse away any remaining traces of salt.

Dispensing systems

⚠ Risk to health due to process chemicals.
Some process chemicals may be corrosive and irritant substances. Swallowing process chemicals can cause chemical burns in the mouth and throat or lead to asphyxiation. If process chemicals get into the eyes, they can irritate or burn them.
Observe the relevant safety regulations issued by the process chemical manufacturers when handling process chemicals and take all the protective measures stipulated by the process chemical manufacturers.

Depending on the model, dishwashers are equipped with multiple dispensing systems for process chemicals:

- **Cleaning agent**

  Cleaning agent can be dispensed in powder form, as a tablet or in liquid form. Powder cleaning agent and tablets are dispensed via the door dispenser with the /||\\ symbol. Depending on the model, liquid cleaning agent is dispensed either via an internal dispensing system or via an external dispensing module (DOS module).

- **Rinsing agent**

  Depending on the model, rinsing agent can be dispensed via the door dispenser with the ✳ symbol or via an external dispensing module (DOS module).

External dispensing modules (DOS modules) can be retrofitted at any time by Miele Customer Service, provided that corresponding DOS module connections are available.

Dispensing module

In addition to the internal dispensing systems, up to two additional external dispensing systems (modules) DOS can be connected for dispensing liquid process chemicals.

Labelling of the siphons

Liquid process chemicals from external containers are dispensed by siphons. Colour coding the siphons can be helpful for correct dispensing.

Specific types of soiling may require different combinations of cleaning agents and additives. The Miele Professional Service Department will be able to advise you.

Dispensing modules (depending on country)

In the case of dishwashers without an internal dispensing pump for liquid cleaning agent, up to two additional, external dispensing modules for liquid process chemicals can be fitted retrospectively.
In the case of dishwashers with an internal dispensing pump for liquid cleaning agent, one additional, external dispensing module for liquid process chemicals can be connected.

External dispensing modules can be retrofitted by the Miele Professional Service Department or by a suitably qualified specialist. Internal dispensing systems cannot be retrospectively fitted.

The DOS module is supplied with its own installation instructions.

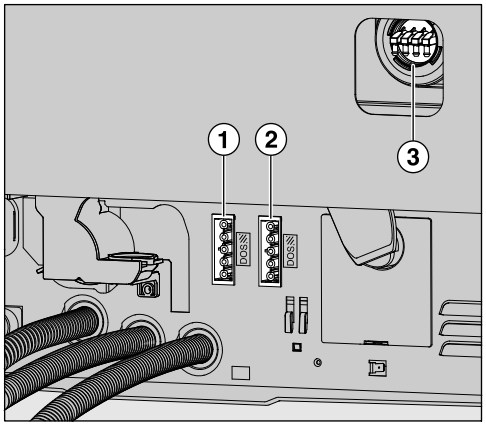

① Power supply connection for DOS 1 cleaning agent (depending on the model).

② Power supply connection for DOS 4 rinsing agent.

③ Connections for dispensing hoses.

> ⚠ Damage caused by incorrect voltage.
> Before fitting the dispensing module, compare the connection data (voltage and frequency) on the module data plate with that on the data plate of your dishwasher. If the data does not match, the module could sustain damage.
> If in any doubt, consult a qualified electrician.

- Connect the module to the electricity supply.
- To connect the dispensing hoses, release the hose clip on a free connector and remove the safety cap.
- Push the dispensing hose onto the connector and secure it with a hose clip.

> Blank off unused connectors for dispensing hoses with safety caps to prevent the leakage of wash water.

Cleaning agent

> Only use cleaning agent suitable for commercial dishwashers.
> Suitable products are available from the Miele Professional product range.

Cleaning agent can be dispensed in powder form, as a tablet or in liquid form.

Powder cleaning agent and tablets are dispensed via the door dispenser with the ⁄⁄|\\ symbol.

> Only use detergent tabs that are quick dissolving. Suitable tablets are available from the Miele Professional product range.

Filling the door dispenser

> ⚠ Risk to health due to dust production.
> When dispensing powder cleaning agents and tablets, dust from fine cleaning agents can be stirred up. If this dust gets into the mouth, throat or eyes, it can cause irritation or burns.
> When dispensing powder cleaning agents and tablets, avoid the production of dust as much as possible.

Add powder cleaning agent or a tablet to the powder cleaning agent dispenser before every wash programme (except Super short, Cold, Reactivation and Drain). Follow the tips on the Super short programme.

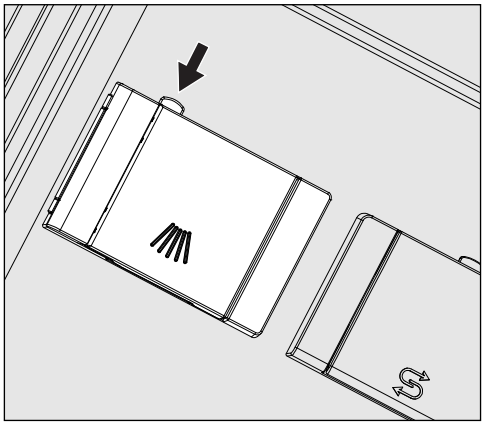

- Press the yellow button on the dispenser container with the ⁄⁄|\\ symbol.

The flap will spring open. The flap is always open at the end of a programme cycle.

The level markers in the powder container with the door in the horizontal position indicate the fill level in millilitres (ml). The max. capacity is approx. 60 ml of cleaning agent.
The amount in ml equates to approx. the amount normally recommended in grams (g) for proprietary powder cleaning agents. Powder density (grain size) can affect this amount.

Dispensing example:
Approx. 8.5 litres of water are taken into the machine for the main wash. With a cleaning agent concentration of approx. 3 g/l, you will need approx. 25 g of cleaning agent. Please observe manufacturer's recommendations, which may vary!

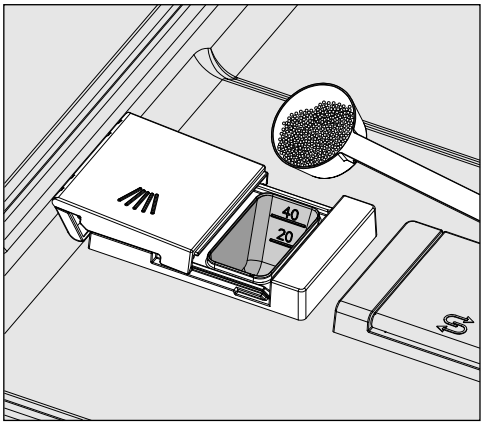

■ Add the cleaning agent to the dispenser.

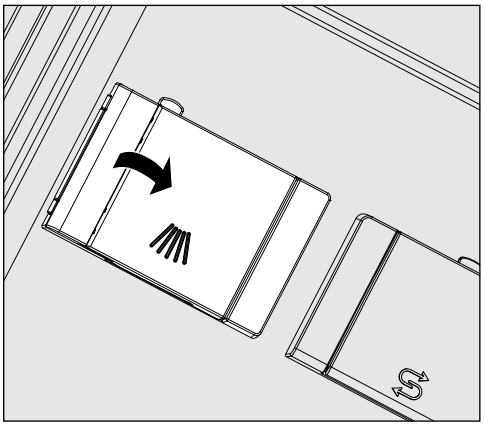

■ Close the flap.

⚠ Make sure that all of the cleaning agent has dissolved at the end of the programme.
Repeat the programme if residual cleaning agent is present.
Check whether any load items have prevented the flushing out of the dispenser container and rearrange the load items if necessary.

Tips for the Super short programme

With the Super short programme, the final rinse water is not pumped away at the end of the programme in order to achieve short programme running times in continuous use. Cleaning agent cannot be rinsed out of the dispenser during the short programme time.

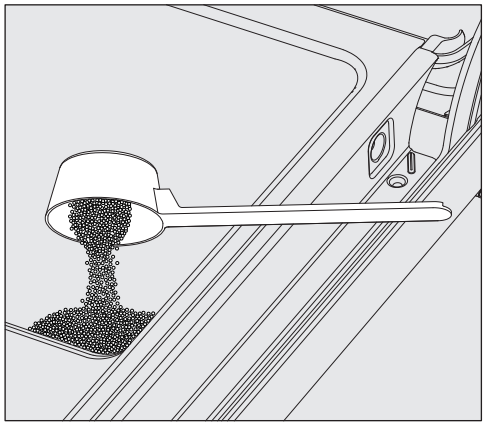

■ If liquid cleaning agent dispensing is not being used, add powder cleaning agent directly onto the inside of the door.

To avoid corrosion or discolouration, start the wash programme immediately after dispensing cleaning agent directly onto the inside of the door.

Liquid cleaning agent is dispensed from an external canister via a suction lance.

Depending on the model, liquid cleaning agent is dispensed either via an internal dispensing pump or via an external dispensing module. Dispensing modules are connected by the Miele Professional Service Department and can be retrofitted at any time.

Refill indicator

When the fill level in the cleaning agent canister is low, you are reminded to change the canister.

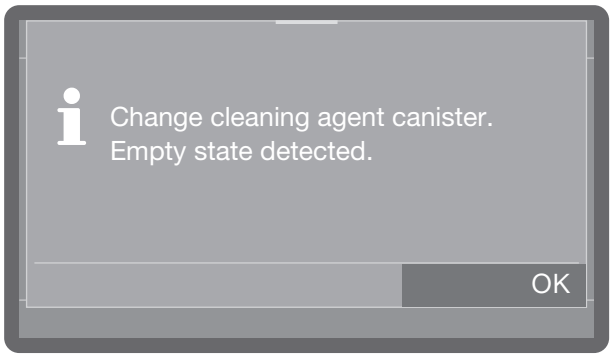

- Confirm the prompt with *OK* and change the cleaning agent canister.
- Fill the dispensing path (see “Machine functions”)

Replacing the canister

- Place the liquid cleaning agent container (note the colour marking) on the open wash cabinet door or on a surface which is robust and easy to clean.
- Take the lid off the canister and remove the suction lance. Place the suction lance on the open wash cabinet door.
- Replace the empty container with a full one.

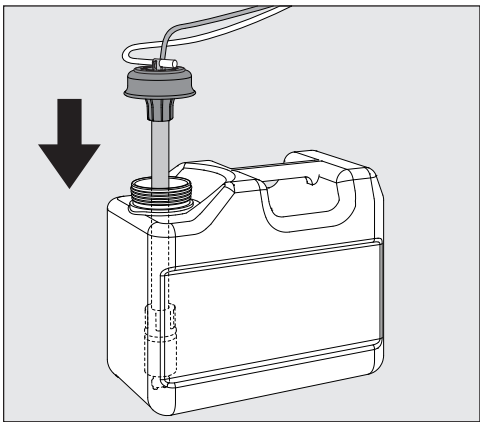

- Push the suction lance into the opening of the container and secure the lid. Observe the colour coding.
- Feed the suction lance into the container until it reaches the bottom.
- If you use a long suction lance in a 5 litre canister, or the 10 litre canister is only half full, the following prompt appears in the display:

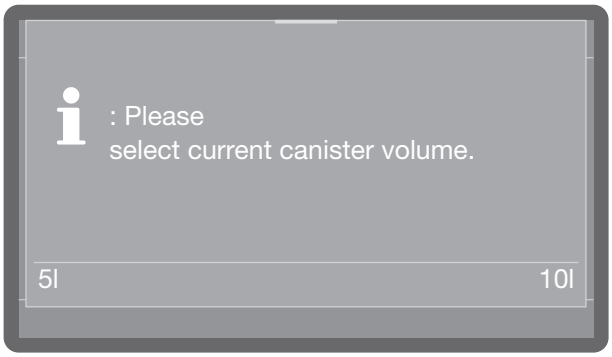

- Select the canister size.
- Wipe up any spilled process chemical thoroughly.

Checking consumption

Check consumption regularly by checking the fill levels in the supply containers and replace containers in good time to avoid the dispensing system being sucked completely dry.

Dispensing liquid cleaning agent

The dispensing concentration is set by Miele Customer Service.

Rinsing agent

Rinsing agent is necessary to ensure water does not cling and leave marks on load items, and to help load items dry faster after the final rinse.

The rinsing agent concentration must be adjusted in the following circumstances:

- If there are spots of water left on load items after reprocessing, then the dispensing concentration is set too low.
- If clouding or smearing appears on load items, the dispensing concentration is set too high.

The rinsing agent is dispensed in the Final rinse programme stage. The container needs to be filled for this purpose.

In the Beer glasses programme (depending on the model), the final rinse is carried out with cold water and without rinsing agent.

Refill indicator

When the fill level in the rinsing agent container is low, you are reminded to refill the dispenser container, e.g.:

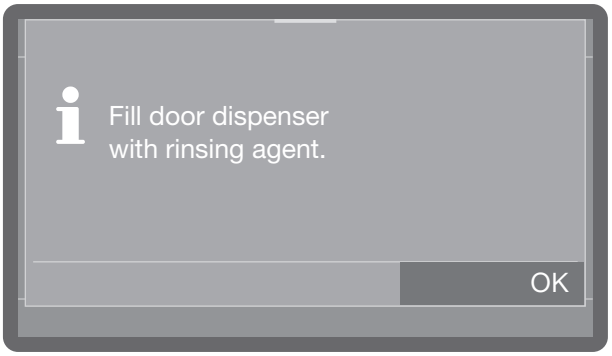

- Confirm the prompt with *OK* and top up the rinsing agent as described.
- Fill the dispensing path (see “Machine functions”)

Filling the door dispenser

⚠ Never add cleaning agent.
This will always destroy the rinsing agent container!
Only fill the rinsing agent container with rinsing agent for commercial dishwashers.

- Open the door fully.

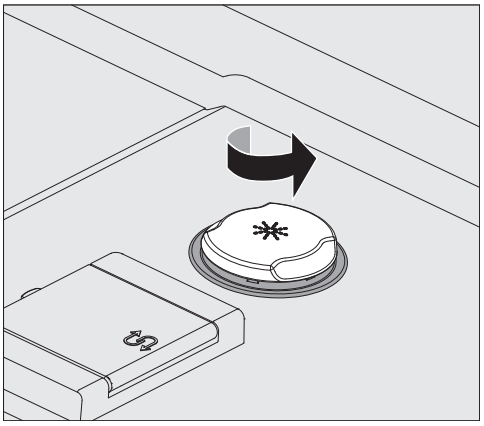

- Unscrew the yellow lid with the ✳ symbol in the direction of the arrow.

The container holds approx. 300 ml.

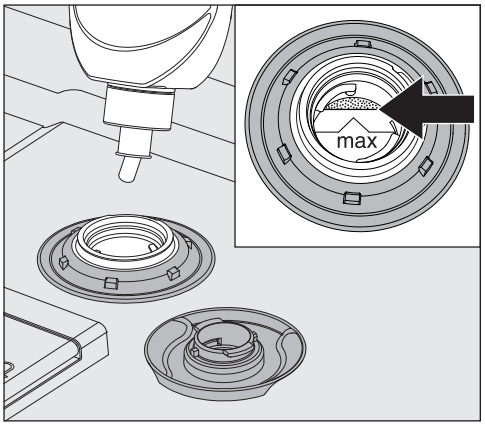

- Only add rinsing agent as far as the “max.” mark on the edge of the funnel.

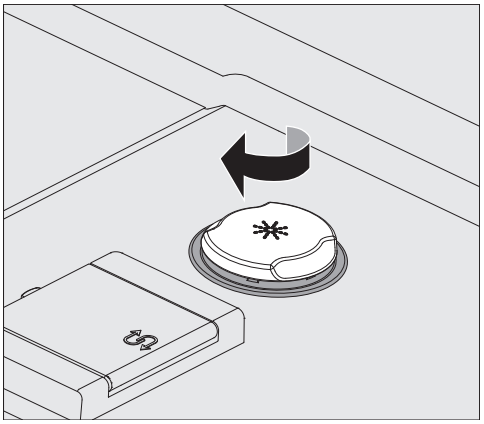

- Close the container.

- Wipe up any spilled rinsing agent thoroughly. This prevents over-foaming during the next programme. Alternatively, you can start the Cold programme to rinse off any spilled rinsing agent.

Refill indicator

When the fill level in the rinsing agent container is low, you are reminded to change the canister, e.g.:

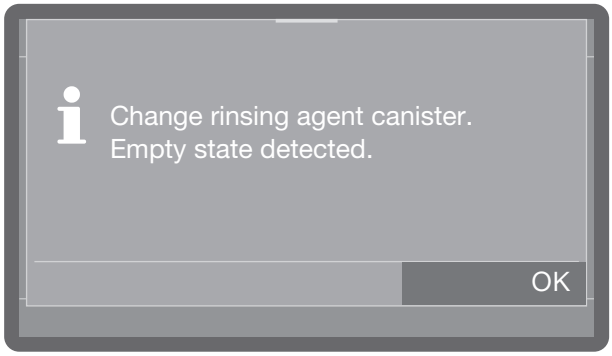

- Confirm the prompt with *OK* and change the rinsing agent canister as described.
- Fill the dispensing path (see “Machine functions”)

Replacing the canister

- Place the rinsing agent container (note the colour marking) on the open wash cabinet door or on a surface which is robust and easy to clean.
- Take the lid off the canister and remove the suction lance. Place the suction lance on the open wash cabinet door.
- Replace the empty container with a full one.

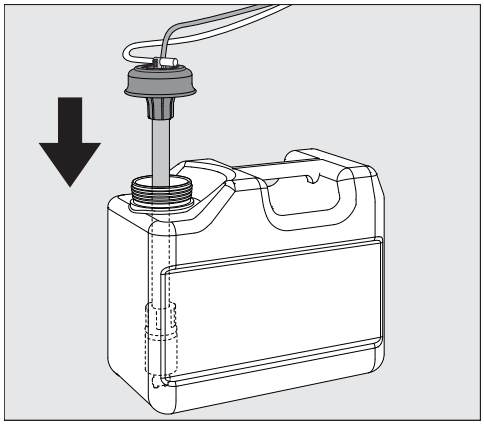

- Push the suction lance into the opening of the container and secure the lid. Observe the colour coding.
- Feed the suction lance into the container until it reaches the bottom.
- If you use a long suction lance in a 5 litre canister, or the 10 litre canister is only half full, the following prompt appears in the display:

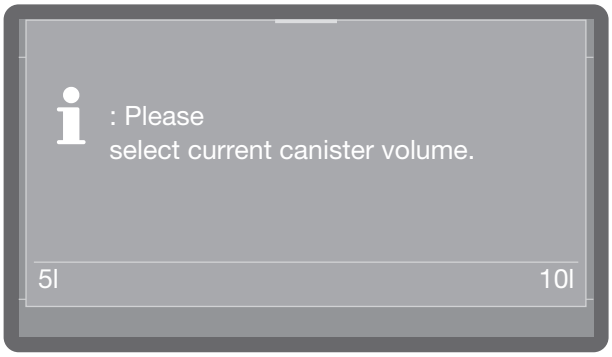

- Select the canister size.
- Wipe up any spilled process chemical thoroughly.

Loading the dishwasher

Remove coarse food residues from crockery.

There is no need to pre-rinse items under running water.

Notes

⚠ Risk of damage caused by acids and solvents.
Ensure that no acid or solvent residues, especially hydrochloric acid or chlorides, get inside the wash cabinet.
Do not put acids or solvents in the wash cabinet.

⚠ Damage caused by items soiled with ash, sand, wax, lubricant or paint
These materials will cause damage to the dishwasher.
Do not wash items soiled with ash, sand, wax, lubricant or paint in the dishwasher.

Load crockery and cutlery into the appropriate places in the baskets. However, please try to observe the following notes:

- Load the crockery so that water can access all surfaces. This ensures thorough and proper cleaning.
- Load plates symmetrically in the upper and lower baskets with the concave surfaces facing the centre of the basket (as shown on the following pages).
- Do not place crockery and cutlery inside other items. They will cover one another.
- Make sure that all items are securely positioned.
- Hollow items such as cups, glasses, and saucepans etc. must be inverted in the baskets.
- Tall, narrow, hollow items should be placed in the centre of the basket if possible. This ensures better water coverage.
- Wide based items should be placed at an angle so that water can run off them freely.
- The spray arms must not be blocked by items that are too tall or hang through the baskets. If in doubt, test for free movement by manually rotating the spray arms.
- If you need to wash large load items in the lower basket, you can remove the upper basket.
- Small items can fall through the holders in the baskets. They should therefore be placed in the cutlery basket.

Items not suitable for washing in the dishwasher:

- Wooden cutlery and crockery or items with wooden parts may discolour or fade. Furthermore, the glue used in these items is not dishwasher safe. Wooden parts may come loose after being washed in a dishwasher.
- Craft items, antiques, valuable vases and decorative glassware are not dishwasher-safe.
- Plastic items which are not heat resistant, as the high temperatures in the dishwasher may cause them to melt or lose shape.
- Copper, brass, tin and aluminium items may discolour or become matt.
- Colours painted over a glaze may fade after a number of washes.
- Delicate glasses and glassware containing crystal may become cloudy over time.

We recommend

- When purchasing new crockery and cutlery, make sure they are dishwasher-safe if you want to wash them in the dishwasher.
- Clouding may occur on glasses after frequent washing in the dishwasher. When washing delicate glassware in the dishwasher, ensure that only a special glass-care programme with very low temperatures (see “Programme chart”) is selected and that a suitable cleaning agent is used. This will reduce the risk of clouding.

Please note:

Silver and aluminium which has been in contact with foods containing sulphur can discolour.

⚠ Risk due to chemical reaction
Aluminium components (e.g. grease filters) must not be cleaned in the dishwasher with caustic alkaline commercial or industrial cleaning agents. These may damage the material. In extreme cases, they can cause a severe chemical reaction (such as an explosive oxyhydrogen gas reaction).
Do not clean pre-treated aluminium components in the dishwasher.

Upper basket

Use the upper basket for small, lightweight and delicate items such as cups, saucers, glasses, dessert bowls etc. Light, heat-resistant plastic items can also be loaded in the upper basket.
Smaller shallow pots and pans can also be washed in the upper basket.

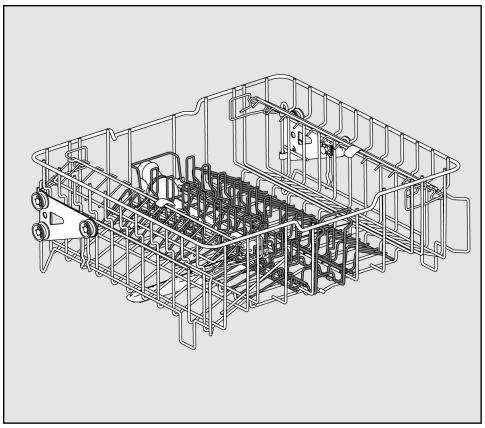

APFD 215 upper basket with APFD 415 insert

The middle insert can be removed from the upper basket to wash larger pots and pans or to replace it with other inserts.

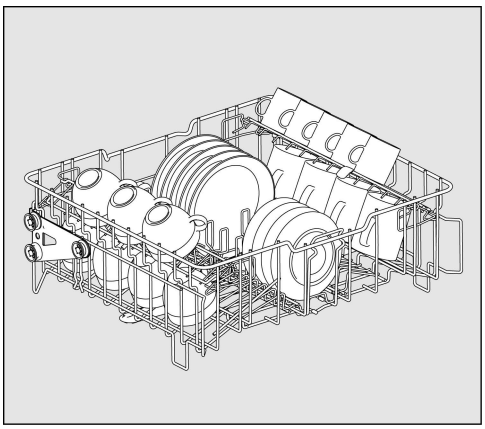

With APFD 415 insert for 20 cups and 32 saucers or 18 dessert plates and 20 cups, for example.

Cup rack

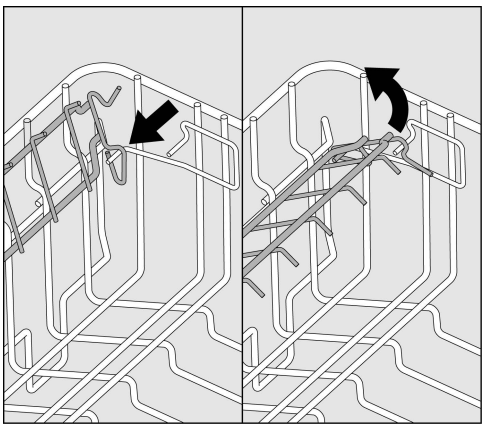

You can fold up the cup rack to place large cups, glasses and mugs in the upper basket.

■ Fold up the cup rack.

The upper basket can be removed in order to wash larger items in the lower basket (e.g. serving dishes).

Adjusting the upper basket

In order to obtain more space for taller items in the lower or upper basket, the upper basket can be adjusted between two positions that are approx. 5 cm apart.

- Pull out the upper basket.

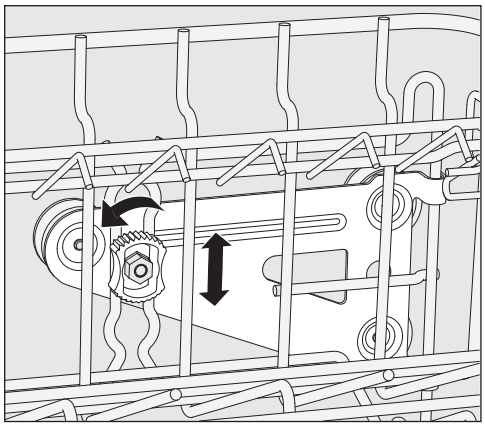

- Unscrew the fixing nuts on both sides.
- Lift or lower the basket into the desired position.
- Tighten the fixing nuts again.

The upper basket must be level in both positions.
If the upper basket is inclined, a water connection is not possible.

⚠ Damage caused by the water connection being positioned incorrectly.
The position of the water connection needs to be adjusted after the height of the upper basket has been changed.
When changing the height of the upper basket, always adjust the water connection accordingly before pushing the upper basket back in.

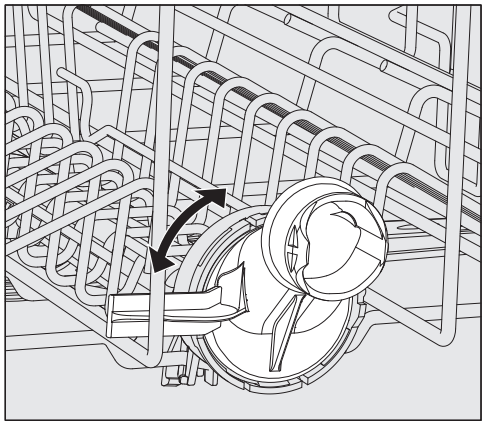

- Turn the upper basket water connection to the upper or lower position.
  The water connection must click audibly into place.

Depending on the position of the upper basket, the following plate dimensions can be accommodated:
Example with APFD 215 upper basket:

Upper basket position	Upper basket plate Ø	Lower basket plate Ø
Top	Max. 15 cm	33 cm*
Bottom	Max. 20 cm	25 cm

* The E 816 plate insert is required in the lower basket.

Lower basket

Place larger and heavier load items such as plates, serving platters, pots, bowls, etc. in the lower basket.
Only place thin, delicate glasses in a suitable insert or lower basket.

Always arrange plates with the top side facing inwards, as shown in the pictures, to achieve the best cleaning result.

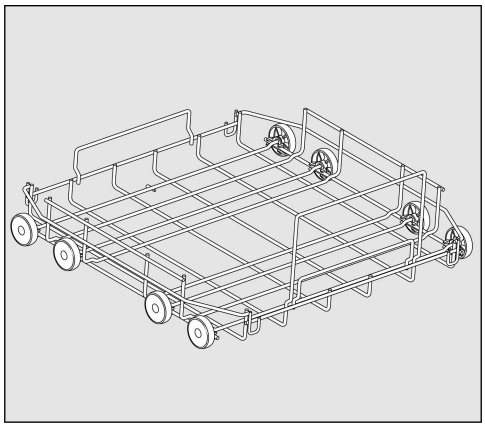

APFD 220 lower basket carrier

For plastic baskets, various inserts and cutlery baskets.

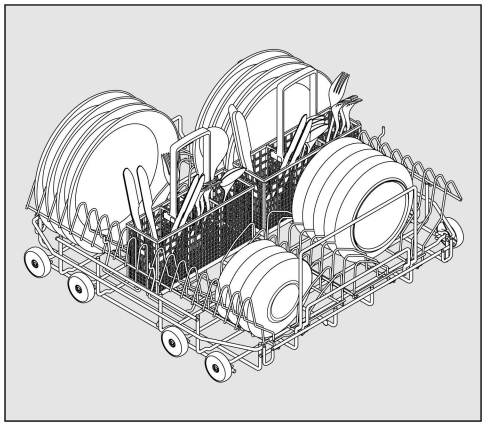

APFD 220 lower basket with 2 x E 816 inserts and 2 x APFD 420 cutlery baskets

32 plates each with Ø 25 cm and various items of cutlery can be loaded. Without cutlery baskets, 38 plates each with Ø 25 cm can be loaded into the E 816 inserts.

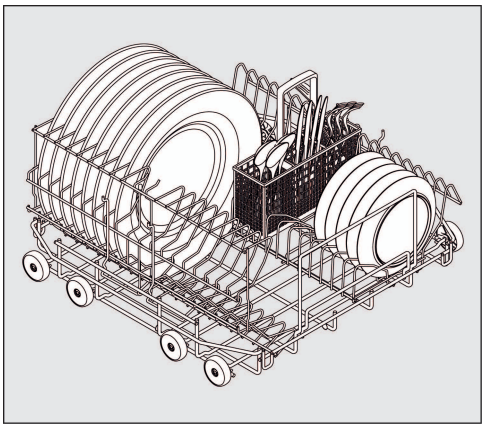

APFD 220 lower basket with an E 816 insert rotated 90°

With the APFD 420 cutlery baskets, 32 plates each with Ø 33 cm and various items of cutlery can be loaded. Without the cutlery basket, 38 plates each with Ø 33 cm can be loaded into the rotated E 816 insert.

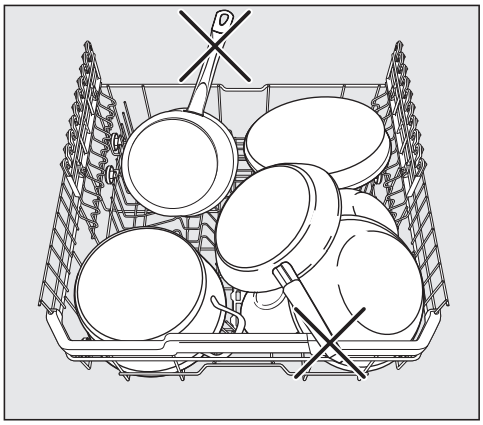

Damage due to protruding items
Protruding items can damage the interior of the dishwasher.
When loading the baskets, make sure that no parts, such as handles, are protruding over the edge of the baskets.

Loading plastic trays

The APFD 220 lower basket carrier can be loaded with plastic trays measuring 500 x 500 mm.

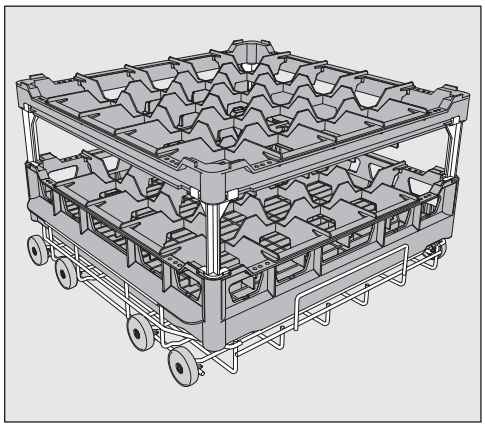

The special O 885 upper basket carrier is required for loading plastic trays in the upper basket (max. height for load items is 130 mm).

The special U 876 lower basket carrier is required for loading taller load items in the lower basket.

Which basket combination to use will depend on the type, shape and size of the load items to be washed.
For further information on baskets, please contact the Miele Professional Service Department.

Examples: (lower baskets)

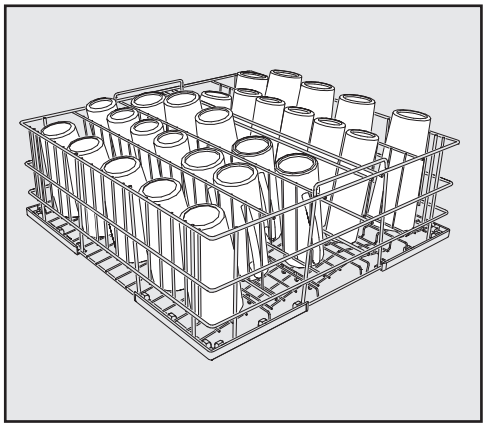

U 525/5-row wire basket

The wire basket can be used for glasses with a maximum diameter of 8 cm.

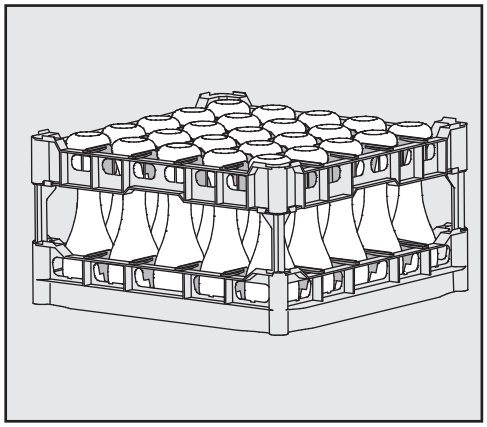

U 534–U 537 plastic baskets with compartments for different glass heights

In this example, the plastic basket is connected to the top frame by long extenders.
(For assembly in U 876 lower basket carrier only)

Assembling a plastic basket

The height of the basket can be altered by fitting a top frame ① to the base basket ④ with long ② or short ③ extenders.

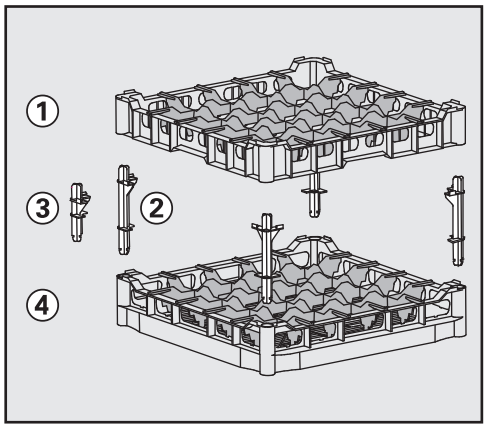

- Push all four extenders into the base basket ④.
- Press the top frame ① securely onto the extenders.

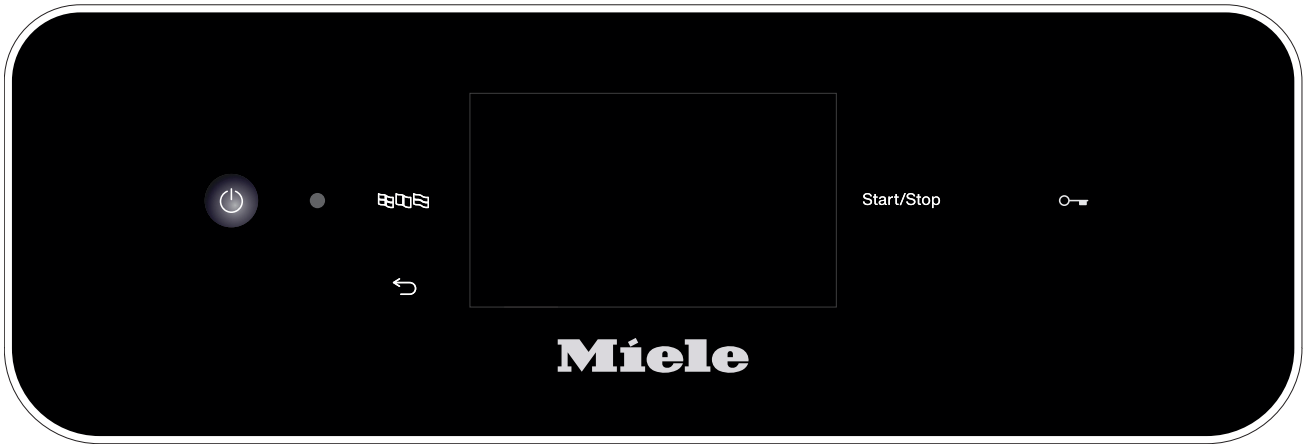

Switching on

- Turn on the tap if it is turned off.

The dishwasher needs to be connected to the electricity supply.

- Press and hold the ⏻ sensor until the following appears in the display:

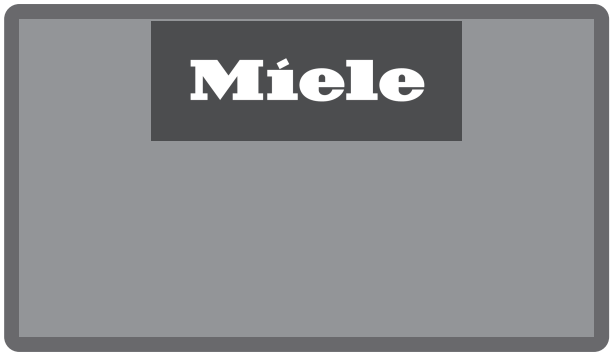

As soon as the dishwasher is ready for operation, the display message changes to show the programme selection screen, e.g.:

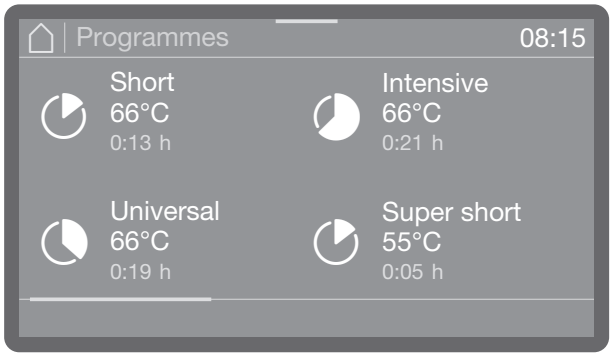

If the Memory function is activated, the most recently started programme is displayed, e.g.:

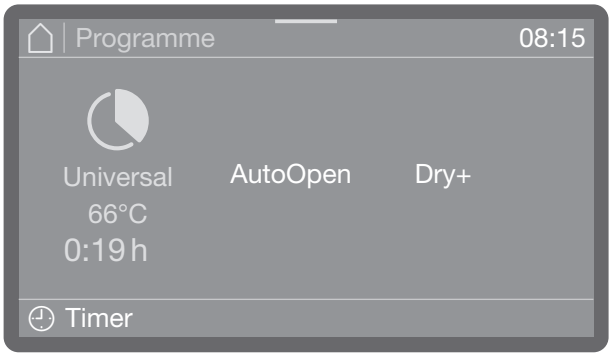

Selecting a programme

Choose your programme according to the type of load items and the degree of soiling.

As soon as you have selected a programme, the LED for the *Start/Stop* sensor starts to flash.

Use the ⮌ sensor to return to the programme selection screen before the programme starts, e.g. to select a different programme. This is no longer possible once the programme has started. If necessary, you must cancel the programme (see “Cancelling a programme”).

Starting a programme

- Press the *Start/Stop* sensor (the LED of the *Start/Stop* sensor will light up).

Once it has been started, a programme can no longer be changed.
You can interrupt (see “Interrupting a programme”) or cancel (see “Cancelling a programme”) the programme in progress.

Starting the programme using a timer

The start of a programme can be delayed, for example, to benefit from economy rates of electricity at night. You can set a start time at which the programme should start (Start at) or a finish time by which the programme should end at the latest (Finish at). The times are set based on the set time of day (see “Time of day”).

Setting the timer

- Select a programme.

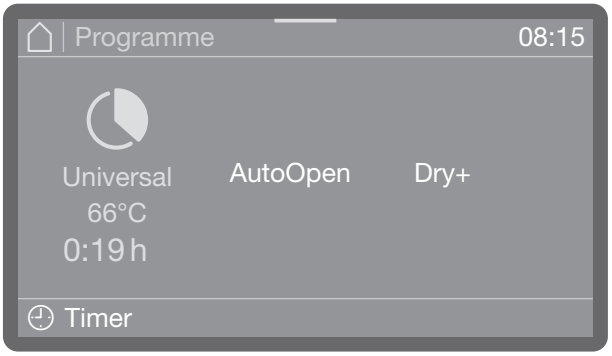

- Tap on Timer to set the timer.

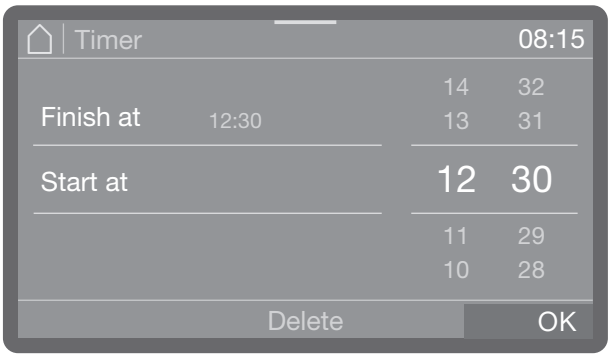

- Then select the start (Start at) or finish time (Finish at).
- Set the time.
- Confirm your entries with OK.

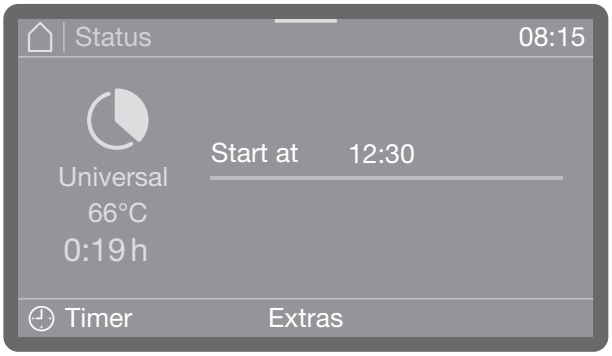

This activates the timer.

Selecting Delete allows you to delete the entries and deactivate the timer.

You can add or switch off functions such as AutoOpen or Dry+ for the next programme via Extras (depending on the model).

Changing the Timer

- If you want to change the time set for the timer, tap on Timer and enter the start or finish time.

Deleting the timer

- Press the *Start/Stop* sensor.

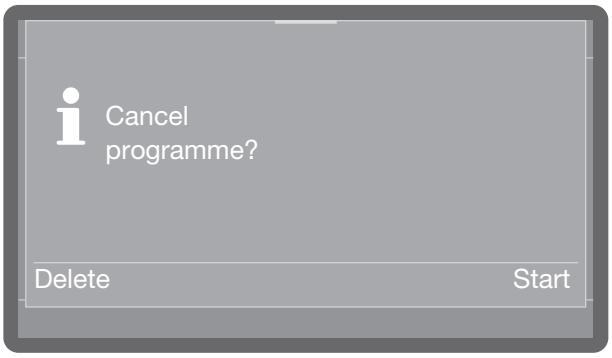

You will then be asked whether you want to start the programme immediately (Start) or whether you want to delete the timer settings (Delete).

Alternatively, you can tap Timer again in the programme
view and delete the timer via the settings that follow.

Programme sequence display

Once a programme has started, the display shows the programme name, the name of the current wash phase and the time left until the programme is finished.

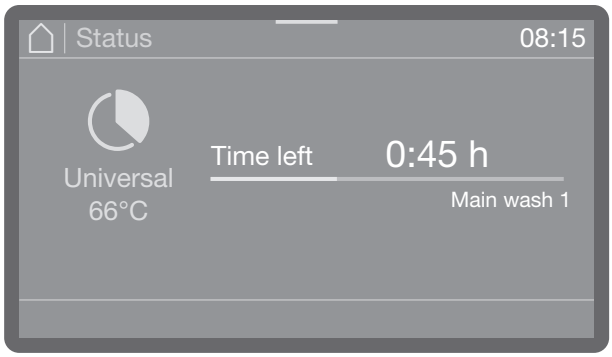

Programme parameters such as the actual and target temperature can be queried during a programme sequence.

- To do this, tap the coloured bar in the middle of the upper edge of the display and swipe downwards.

End of the programme

After a programme has ended normally, the LED of the Start/Stop sensor will go out and the following will appear in the display.

In addition to this, a buzzer will sound for approx. 3 seconds (factory default setting). The buzzer is repeated three times every 30 seconds. To change buzzer settings, see “Volume”.

If system messages are present, they are displayed afterwards, e.g. if the salt container level or the fill level of the liquid process chemicals containers was low during the programme, or when the next service is due. Every message needs to be acknowledged individually by pressing *OK*.

- Tap to acknowledge the display, and the completed programme will be displayed.

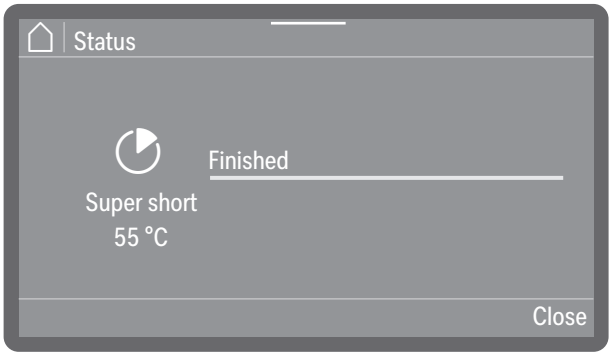

- Tap and drag the coloured bar down to display the programme parameters.

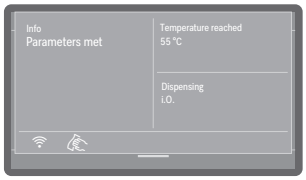

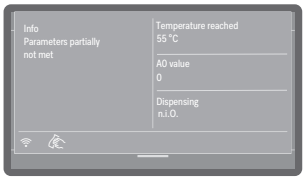

- The values displayed indicate whether the programme parameters have been met.
- If the parameters are not met, we recommend repeating the programme.

Switching off

- Press the ⏻ sensor until the display turns off.

Unloading the dishwasher

Dishes tend to break and chip more easily when they are hot. Allow the dishes to cool until they are comfortable enough to handle before unloading them.

The dishes will cool much faster if you open the door fully after switching off the dishwasher.

Unload the lower basket first, and then the upper basket. This will prevent water drops from the upper basket from falling onto the crockery in the lower basket.

Interrupting a programme

A programme which is already running should only be interrupted if strictly necessary, e.g. if the load items are moving significantly.

⚠ Danger of scalding, burning and chemical burns!
The load items, the load carrier and the interior of the wash cabinet may be very hot.
Steam may also escape when the door is opened. Depending on the wash phase, process chemicals may be dissolved within the steam, which can cause irritation and burns in the eyes and respiratory tract.
A programme should only be interrupted if strictly necessary.
Open the door slowly and carefully and avoid contact with the steam that may escape. Touch the load items at your own risk.

- Open the door (see “Opening and closing the door”).

If the door lock is activated, you must first enter the PIN code to unlock the door, see ▸ Further settings ▸ Door lock code. If the lock is deactivated, you can open the door without entering a code. If you cancel the process, do not enter a PIN code or enter an incorrect PIN code, the programme will continue without interruption.

- Enter the door lock code.

If the temperature in the wash cabinet is more than 67 °C, the following message alerts you to possible dangers when opening the door.

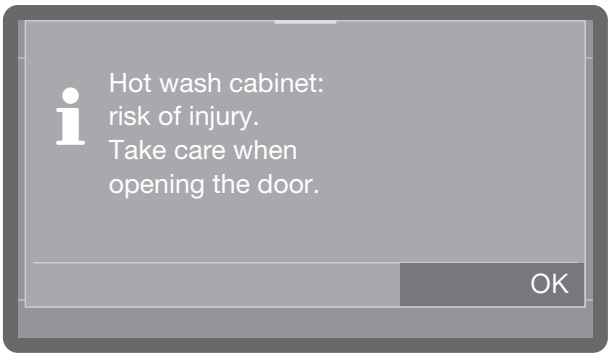

- Confirm the message with OK.
- Rearrange the load items so that they are stable.
- Close the door again to continue the programme.

The programme automatically continues from the point at which the interruption occurred.

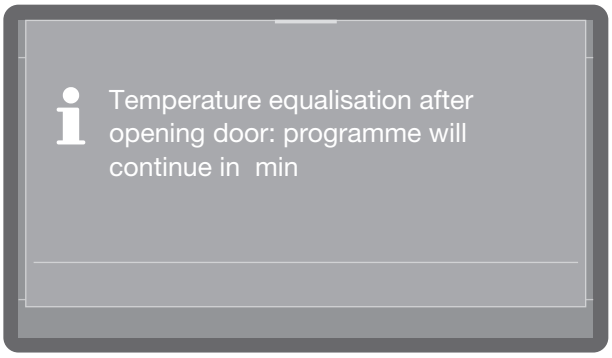

If the temperature inside the wash cabinet is more than 50 °C at this point, the pressure is equalised first. Then the programme continues.

Cancelling a programme

Only cancel a programme which has already started if strictly necessary, e.g. if you want to change the programme.

In the event of a fault, the programme will be cancelled automatically.

⚠ Risk of scalding and burning due to hot load items.
The load items and the wash cabinet may be very hot.
Open the door slowly, taking care not to touch the load items or the interior cabinet.

- Press the *Start/Stop* sensor.

The following will appear in the display:

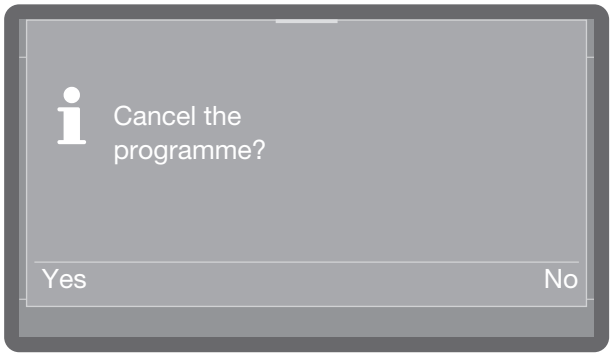

- Select Yes and confirm your choice with *OK*.

The programme will only be cancelled when Yes is confirmed.

The following message will appear in the display:

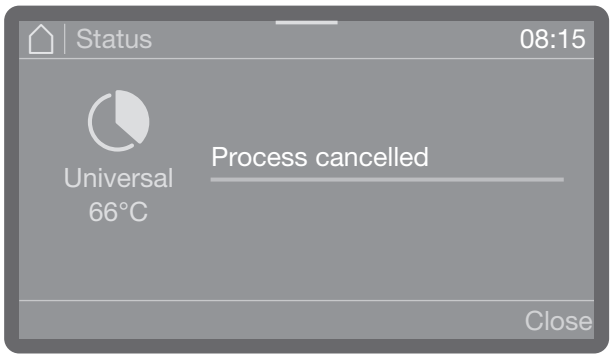

The door needs to be opened.

If you change the programme and the cleaning agent dispenser flap has already opened, add more cleaning agent as needed.

The Machine functions menu includes relevant functions to support daily routine tasks.

The factory settings are indicated by a tick ✓. A description of how to configure settings is provided after the overview.

Menu structure

- Machine functions
  - Filter interval *)
    - Filter interval
    - Reset interval
  - Dispensing systems *)
    - Fill dispensing paths
      - Cleaning agent canister
      - Rinsing agent canister
    - Rinse dispensing paths
      - Cleaning agent canister
      - Rinsing agent canister
  - Dry+ *)
    - Programme selection
      - All programmes ✓
      - Selection
    - Extend Dry+ time
      - Selection
  - AutoOpen *)
    - On ✓
    - Off
  - AutoClose *)
    - On ✓
    - Off

*) Depending on the model

Filter interval

The air filters for active drying inside the machine have a limited service life. For this reason, the filters must be replaced regularly.

For more information on replacing the filter, see “Cleaning and care/Changing the filter”.

You can use the following menu to display the remaining life of the filter and to reset the counter after changing the filter.

The menu is saved under the following input path.

Machine functions
Filter interval*)

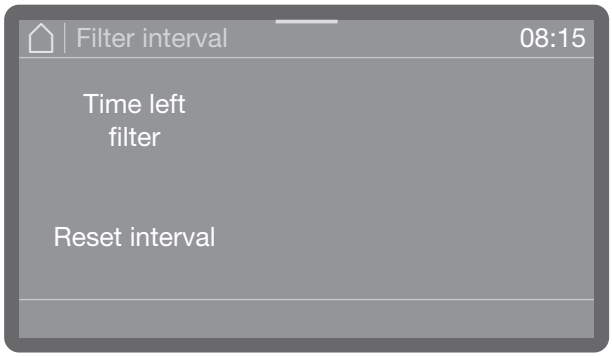

- Remaining time filter

  The time remaining before the filter will need to be changed.

- Reset interval

  Resets the number of operating hours before the filter will need to be changed.

■ Select an option.

⚠ The interval must only be reset when the filter has been changed.

Dispensing systems

The dispensing systems for liquid media can only dispense reliably if the dispensing system has been purged of air and contains no deposits.

Filling dispensing paths

The dispensing systems need to be topped up in the following situations:

- If the dispensing system is being used for the first time.
- If air has been sucked in or the system has been drained due to a lack of liquid media.

Before filling the dispensing paths, make sure that the containers are full and that the suction lances are screwed securely to the containers and that they cannot suck in air.

The menu is saved under the following input path.

Machine functions
Dispensing systems
Fill dispensing paths

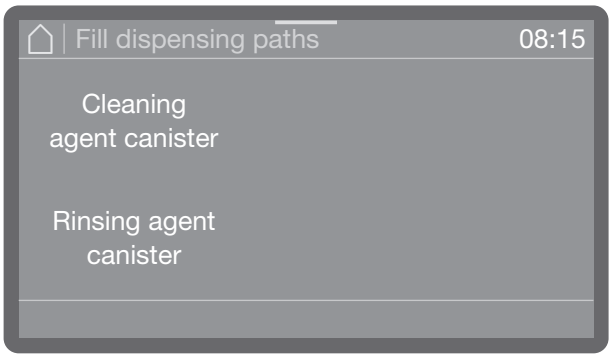

- Cleaning agent canister

  Fill the cleaning agent dispensing system.

- Rinsing agent canister

  Fill the rinsing agent dispensing system.

■ Select the dispensing system that you want to fill.

You will then be asked if you want to start the filling process, e.g.:

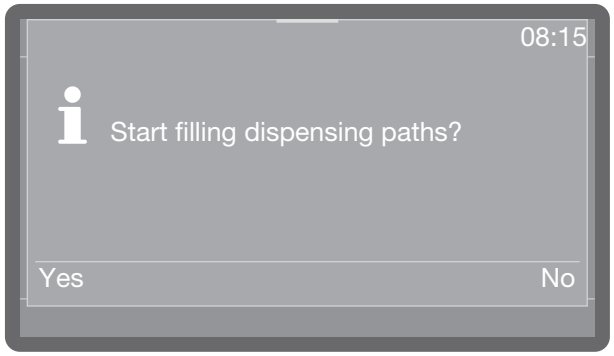

- Select Yes to start the process.
  The dispensing system is filled automatically. The message Filling of dispensing paths completed is displayed following successful completion. If filling is interrupted prematurely, the process must be repeated.
- Cancel the process at this point by selecting No.

Rinsing dispensing paths

A dispensing system must be rinsed in the following situations:

- If a dispensing system was accidentally filled with the wrong medium.
- If deposits have formed in the dispensing paths or in the containers, which could completely or partially clog the systems. Deposits can form, for example, after long periods of downtime or when the containers are refilled instead of being replaced.

- Fill a clean container, e.g. a bucket, with clear, clean water.

⚠ Damage to the dispensing system.
Small foreign objects in the water, such as sand, fluff or similar, can be sucked in by the dispensing system and may clog or damage it.
Make sure that there are no foreign objects in the water.

- Place the suction lance in the container with the water. The lower end of the suction lance with the suction opening must be thoroughly rinsed.
- Secure the suction lance so that it cannot tip over or fall out of the container.

The menu is saved under the following input path.

Machine functions
Dispensing systems
Rinse dispensing paths

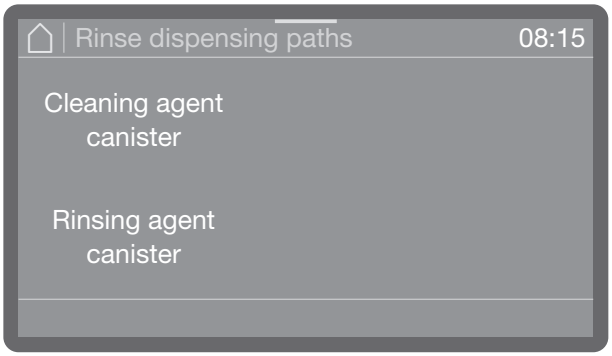

- Cleaning agent canister
  Rinse the cleaning agent dispensing system.
- Rinsing agent canister
  Rinse the rinsing agent dispensing system.

- Select the dispensing system that you want to rinse.

You will then be asked if you want to start the process, e.g.:

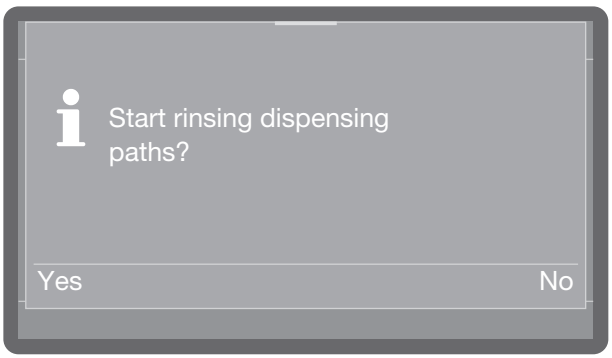

- Select Yes to start the process.
  The dispensing system is rinsed automatically. The message Rinsing of dispensing paths completed is displayed following successful completion. If rinsing is interrupted prematurely, the process must be repeated.
- Cancel the process at this point by selecting No.

Dry+

Dry+ active drying is only available on dishwashers with a drying fan (depending on the model).

Dry+ active drying accelerates and improves the drying process at the end of the programme. When the door is closed, a fan conveys filtered fresh air into the wash cabinet for active drying.

You can subsequently activate or deactivate active drying for all programmes that support Dry+, as well as extend the fan running time and in turn adjust the drying phase for individual programmes. You can find out which programmes support Dry+ in “Programme parameters”.

Programme selection

The menu is saved under the following input path.

Machine functions
Dry+
Programme selection

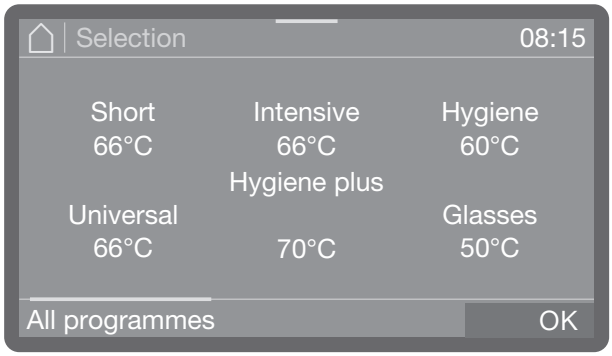

- Select the programmes for which you want to activate Dry+. Activated programmes are highlighted in colour.
- If you want to activate Dry+ for all programmes, tap on All programmes.
- Press OK to save the selection.

Extension

The fan running time is preset for each programme and it is only possible to extend this running time or to cancel an extension. It is not possible at this point in time to shorten the preset running time or to switch off the fan.

The menu is saved under the following input path.

Machine functions
Dry+
Extend Dry+ time

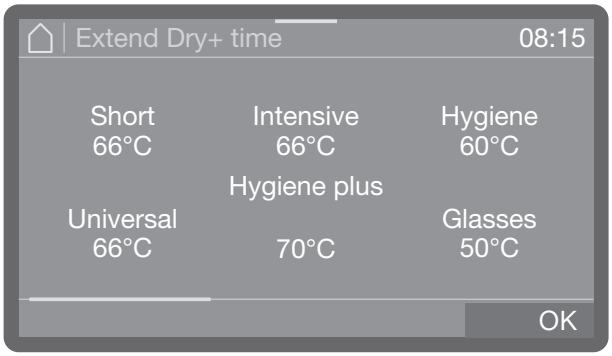

- Scroll through the programme list and select the programme for which you want to extend the fan running time.

The running time can be extended by up to 30 minutes in 1-minute increments.

- Set the running time. In the lowest setting, the running time corresponds to the preset baseline value.
- Press OK to save the setting.

AutoOpen

AutoOpen is an additional assisted drying function. At the end of a programme, the door opens slightly to allow residual moisture to escape from the wash cabinet more quickly.

The door is opened as soon as the temperature in the wash cabinet has dropped below a certain value. Before the door is opened, a corresponding message is shown in the display and a buzzer sounds if buzzers are activated.

You can find out which programmes support this function in the “Programme chart”.

The menu is saved under the following input path.

Machine functions

AutoOpen

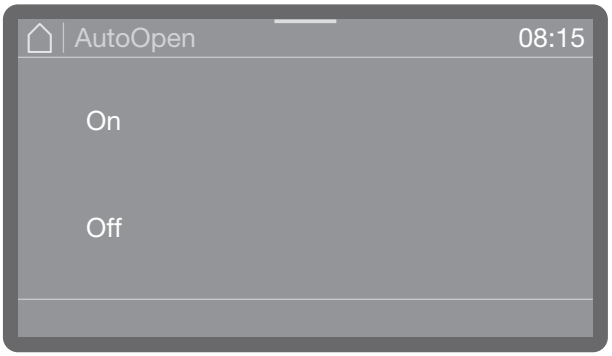

- On

  AutoOpen is activated for all programmes.

- Off

  AutoOpen is deactivated for all programmes.

■ Select an option.

AutoClose

This can be used to determine whether the door should be drawn into the final closed position by the automatic door lock immediately after closing or whether it should remain slightly open.

In its final closed position, the door is mechanically locked and can be unlocked and opened again by pressing the door sensor.

The menu is saved under the following input path.

Machine functions

AutoClose

- On

  AutoClose is activated for all programmes. The door is drawn into the final closed position and locked immediately after closing.

- Off

  AutoClose is deactivated for all programmes. The door hooks into the latch and can be pulled open again without pressing the sensor.

■ Select an option.

Settings

Basic parameters for machine control are stored in the Settings menu.

The factory settings are indicated by a tick ✓. A description of how to configure settings is provided after the overview.

Menu structure

- Settings
  - Time
    - Clock format
      - 12 h
      - 24 h ✓
    - Set the time
  - Date
    - Date format
      - DD/MM/YYYY ✓
      - MM/DD/YYYY
      - YYYY/MM/DD
    - Set date
  - Display brightness
  - Volume
    - Buzzer tones
    - Keypad tone
  - Welcome melody
    - On ✓
    - Off
  - Sensor reaction
    - Direct ✓
    - Language selec. delayed
  - Temperature unit
    - °C ✓
    - °F

Time of day

The time of day is required for the display and the Delay start, for example. The date format and the current time of day have to be set.

> There is no automatic adjustment between daylight savings and standard time.
> You need to make this adjustment yourself as necessary.

Selecting the time of day format

The menu is saved under the following input path.

Settings
Time
Clock format

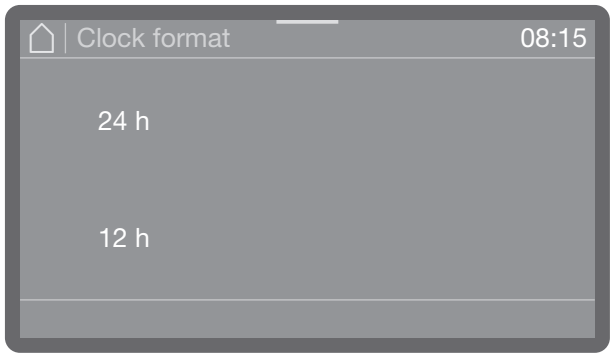

- 24 h

  Time of day display in 24-hour format.
- 12 h

  Time of day display in 12-hour format (am/pm).

■ Tap to select a format.

Setting the time of day

To set the format for the time of day:

The menu is saved under the following input path.

Settings
Time
Set the time

The time of day is set in the set time of day format.

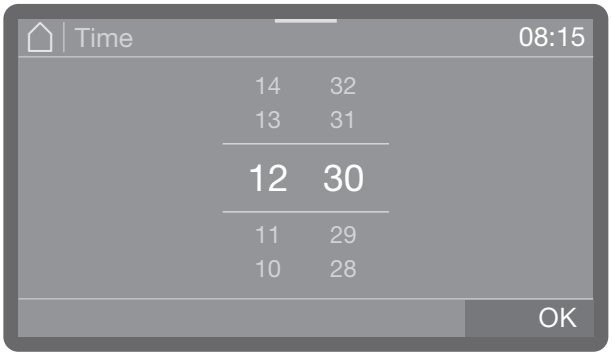

■ Set the time of day and confirm your entry with OK.

Date

The date format and the current date have to be set.

Selecting the date format

The menu is saved under the following input path.

Settings
Date
Date format

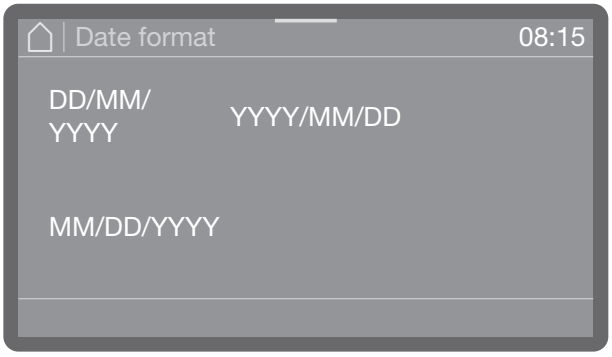

- DD is the day (D = day)
- MM is the month (M = month)
- YYYY is the year (Y = year)

- Select the format you want.

Setting the date

The menu is saved under the following input path.

Settings
Date
Set date

- Set the date. The order of year, month and day is the same regardless of the date format set.
- Press OK to save the setting.

Display brightness

You can also set the brightness of the display.

The menu is saved under the following input path.

Settings
Display brightness

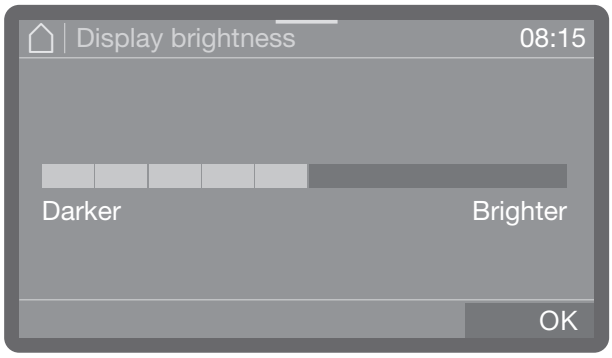

- Adjust the brightness of the display and save the setting by pressing OK.

Volume

An acoustic signal transmitter is integrated in the control panel, which can provide acoustic feedback in the following situations:

- Keypad tone when operating the controls
- Buzzer tones at the end of a programme or for system messages (notifications)

The menu is saved under the following input path.

Settings
Volume

The volume for the Keypad tone and the Buzzer tones is always set in the same way.

- Select one of the options Keypad tone or Buzzer tones.

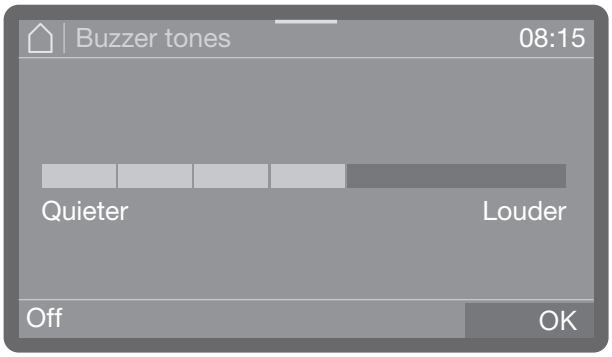

- Set the volume. In the lowest setting, the sound is switched off and can be switched back on again if required by selecting On (displayed instead of Off).
- Press OK to save the setting.

Welcome tone

There is a brief melody when the machine is switched on and off. You can use this option to switch this melody off and back on again.

The menu is saved under the following input path.

Settings

Welcome melody

- On

  A welcome melody is played when the machine is switched on.

- Off

  The melody is switched off.

■ Select an option.

Sensor reaction

You can extend the response time of the language selection sensor on the control panel to prevent accidental activation from a brief touch.
The sensor responds slowly when pressed and must be held down longer each time to trigger the function.

The menu is saved under the following input path.

Settings

Language selec. delayed

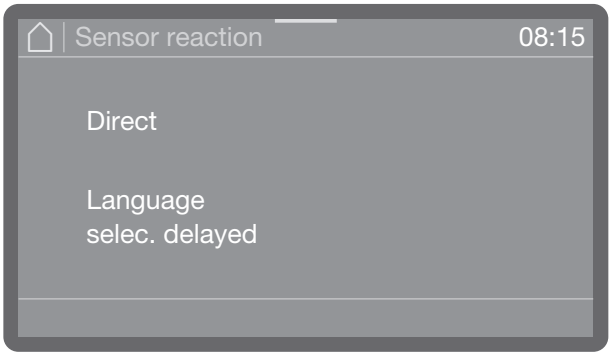

- Direct

  The sensor controls react immediately to being pressed.

- Language selec. delayed

  Only the language selection sensor responds slowly when pressed and must be held down longer before it responds.

■ Select an option.

Temperature unit

The temperature can be shown in the display in °C (degrees Celsius) or °F (degrees Fahrenheit).

The menu is saved under the following input path.

Settings

Temperature unit

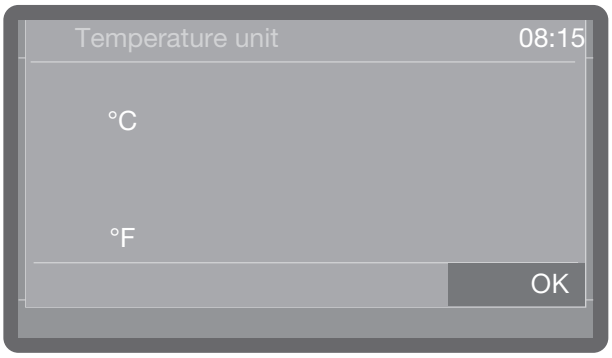

- °C

  Temperature display in Celsius.

- °F

  Temperature display in Fahrenheit.

■ Tap to select the option you want.

Further settings

The Further settings menu incorporates all administrative processes and settings.

Access to the Further settings menu is protected by a PIN code.
You must enter the correct PIN code to open the menu.

Menu structure

- Further settings
  - Programme lock filter
    - On
    - Off ✓
  - Standby/Off
    - Standby/Off
    - Off after 10 min
  - Log book
    - Water
      - Cold water consumption l
      - Hot water consumption l
    - Liquid cleaning agent consumption l
    - Rinsing agent
    - Operating hours
    - Programme cycles
    - Service interval
  - Release programmes
    - All programmes ✓
    - Selection
  - Set favourites
  - Configure programmes
    - *[Programme name]*
      - Cleaning temperature
      - Main wash holding time
      - Final rinse temperature
      - Final rinse holding time
      - Increas. water quantity
      - Interim rinse
      - Change name
    - Reset
  - Ao Display A0 value
    - Off ✓
    - On
  - Dispensing systems
    - Cleaning agent door
    - Rinsing agent door
      - Refill indicator
        - On ✓
        - Off
      - Dispens. concentration
    - Cleaning agent canister
      - Dispens. concentration
      - Fill dispensing paths
      - Rinse dispen- sing paths
      - Deactivate ✓

- Rinsing agent canister
  - Dispens. concentration
  - Fill dispensing paths
  - Rinse dispen- sing paths
  - Deactivate ✓
- Cycles until empty
- Water hardness
  - 2.5 mmol/l (14° dh) ✓
- Note reactivation
  - 1
- Memory
  - On ✓
  - Off
- PIN code
  - Change PIN code
- Safe mode
  - On
  - Off ✓
- Door lock code
  - On
  - Off
- Network/Wi-Fi
  - Set up
    - Manual
    - Via WPS
    - Via Soft AP
  - Activate
  - Deactivate
  - Connection status WLAN-SSID: IP-Address:
  - Set up again
  - Reset
  - IP configuration
    - DHCP
    - DNS Auto
  - MAC address
- RemoteUpdate
  - On
  - Off ✓
- Showroom
  - Demo mode
    - On
    - Off ✓
- Software version
  - 1-SBAE ID XXXX
  - 2-EL ID XXXX
  - 3-EFU ID XXXX
  - 5-LG ID XXXX
- Data plate
- Factory default settings
  - Programme settings only
  - Reset all settings?
- § Legal information

*) Depending on the model

Programme lock filter

The filter combination in the wash cabinet filters coarse dirt particles out of the wash water. If dirt particles enter the circulation system, they may clog the spray arms, valves, etc.

It is possible to stop the programme from starting if the micro-fine filter has been inserted incorrectly or is missing.

The menu is saved under the following input path.

Further settings

Programme lock filter

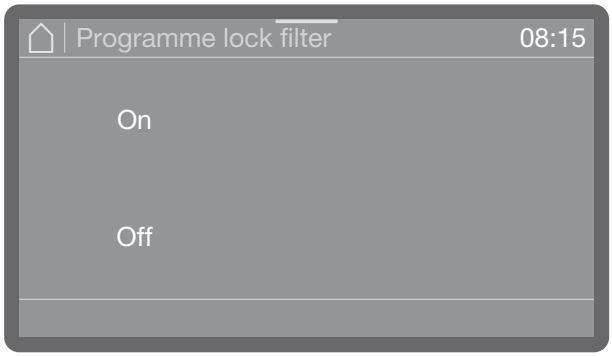

- On

  Programmes are prevented from starting if the micro-fine filter has been inserted incorrectly or is missing.
  A programme can only be started when the micro-fine filter is inserted correctly.

- Off

  Programmes can be started regardless of the status of the micro-fine filter. A confirmation prompt is displayed, which must be confirmed if the micro-fine filter is not inserted correctly.

■ Select an option.

Standby/Off

If the dishwasher has not been used for 10 minutes, it can be set to standby or switched off automatically.

In standby mode, the dishwasher remains switched on and the *Start/Stop* sensor flashes. The dishwasher can be reactivated by pressing the *Start/Stop* sensor, touching the display or opening the door.

After automatic switch-off, the dishwasher is switched off and can be switched on again by pressing the ⏻ sensor.

The menu is saved under the following input path.

Further settings

Standby/Off

■ Select the Standby/Off menu option

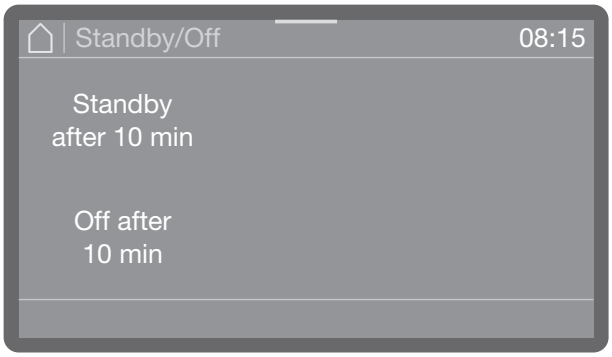

- Standby after 10 min

  Switch to standby mode after 10 minutes

- Off after 10 min

  Switch off after 10 minutes.

■ Select an option.

Log book

The consumption data for water and process chemicals as well as the operating hours and programme sequences are logged in the log book. The entire life cycle of the machine is recorded.

Miele Customer Service can also use the log book to calculate a recommendation for service intervals.

The menu is saved under the following input path.

Further settings

Log book

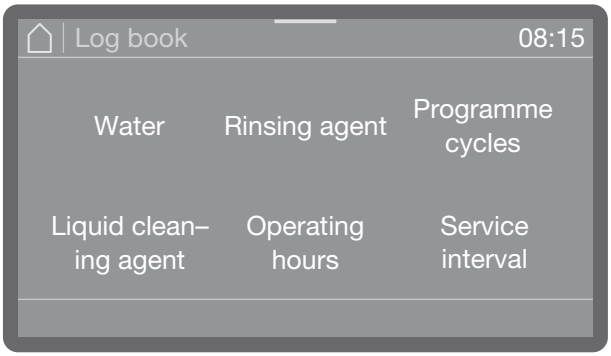

- Water

  Display of water consumption in litres (l)
  If there are several water connections (depending on the model), the consumption is displayed according to the water type.

- Liquid detergent

  Consumption of liquid cleaning agent in litres (l)

- Rinsing agent

  Consumption of rinsing agent in litres (l)

- Operating hours

  Number of operating hours

- Programme sequences

  Total of all programme sequences.
  The display can be broken down by programme.

- Service interval

  Reminder about the next service. The date of the next service is entered by the Miele Professional Service Department.

- Scroll to the option you want using the ∧ and ∨ arrows and select it by tapping on it.

The values in the log book cannot be changed.

- Press the ⮌ sensor to exit the menu.

Programme release

There is an option to block individual programmes. Blocked programmes are no longer available in the programme selection screen. This ensures, for example, that only programmes suitable for the load items are used.

The menu is saved under the following input path.

Further settings

Release programmes

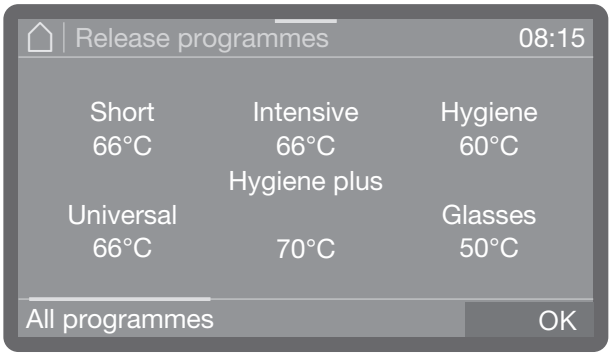

- Scroll through the programme list and select the programmes that you want to make available to users. Multiple selection is possible. Activated programmes are highlighted in colour.
- Press All programmes to select all programmes at once.
- Press OK to save the selection.

Set favourites

Under Favourite programmes, you can define the order of the programmes and choose which programmes should be immediately accessible in the programme selection screen. You can choose from all the programmes available under Approved programmes.

The menu is saved under the following input path.

Further settings

Set favourites

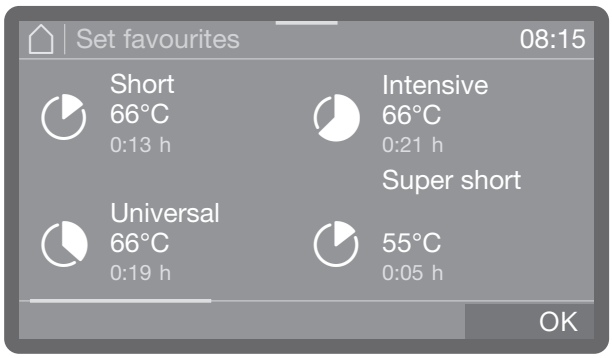

The programme overview appears in the display.

- Select a programme by tapping and holding it until a frame appears around the programme.
- Drag the programme to the required position and remove your finger from the display.

The frame around the programme disappears and the programme remains in the required position.

- Press OK to save the setting.

Programme parameters

The programme parameters should be adjusted to suit technical requirements and the load items.

Additional specialist knowledge about the machine and its processes is required to modify programme parameters and this should therefore be undertaken only by experienced users or by Miele Customer Service.

- Start by selecting the programme you want to change.

Selecting a programme

The menu is saved under the following input path.

Further settings

Configure programmes

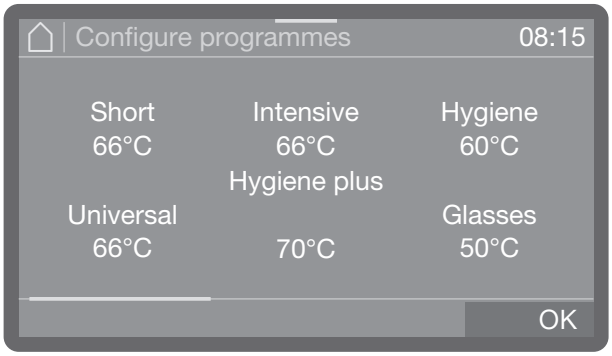

- Scroll through the programme list and select the programme that you want to change.
- Select a programme parameter that you want to change.

Main wash temperature

The main wash temperature is reached by heating up the wash water. The temperature needs to be adjusted to the task.

Process chemicals are dispensed at a default dispensing temperature set ex-works.

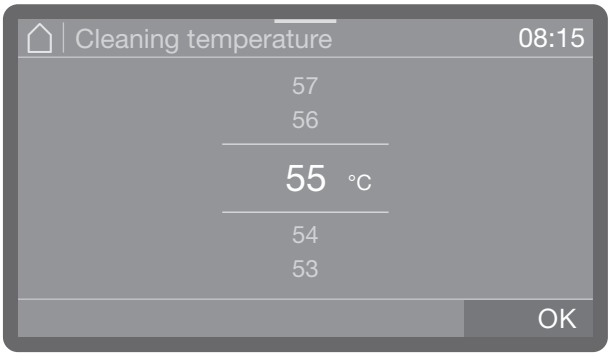

- Set the temperature. The adjustment range varies depending on the model and programme.
- Press OK to save the setting.

Main wash holding time

The holding time is a period during which the temperature in the wash block is kept constant.

In the case of the Super short programme, the holding time is entered in seconds and can be adjusted in 5-second increments.

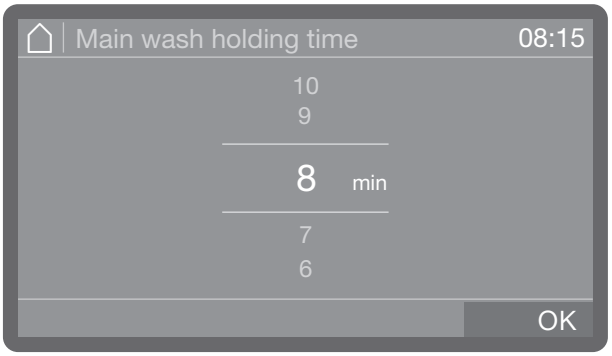

- Set the holding time.
- Press OK to save the setting.

Final rinse temperature

The final rinse temperature is reached by heating up the wash water. The temperature needs to be adjusted to the task.

This menu option is not available on dishwashers with Dry + drying.

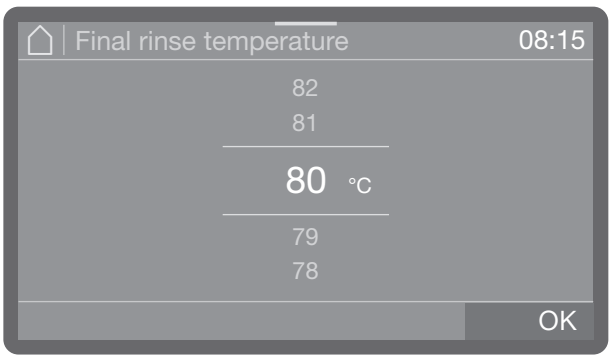

- Set the temperature. The adjustment range varies depending on the model and programme.
- Press OK to save the setting.

Final rinse holding time

The holding time is a period during which the temperature in the wash block is kept constant.

In the case of the Super short programme, the holding time is entered in seconds and can be adjusted in 5-second increments.

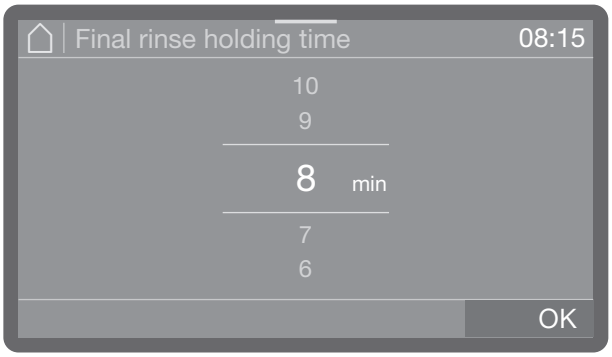

- Set the holding time.
- Press OK to save the setting.

Increased water level

It is then advisable to increase the water level when a lot of water is absorbed due to the structure of the load items or when the type of soiling and the process chemicals used lead to excess foam development. The additional volume of water depends on the type of basket or mobile unit used, the type of soiling and the load items.

If slightly soiled load items which absorb a little water are being reprocessed, the water level can be reset to the factory default setting to save water and energy.

- Set the additional volume of water. In the lowest setting, the volume of water corresponds to the factory default setting.
- Press OK to save the setting.

Changing names

You can change a programme name if required. The preceding symbol cannot be changed.

- Select the Programme name option.

Names can consist of up to 15 characters including spaces. The following options are available for naming:

- Letters from A to Z;
  each new word will automatically start with a capital letter.
- Numbers from 0 to 9.
- Spaces ␣.
- Use the 🗑 symbol to delete the last entry.
- Select Reset to reset the programme names to the factory default settings.
- Press the ⮌ sensor to end the process without saving the name change.

- Enter the name.
- Confirm your entry by pressing OK.

Interim rinse

If required, an additional interim wash block can be activated for selected programmes.

You can find out which programmes support this function in the “Programme chart”.

- On

  Activates the additional interim wash block for the selected programme.
- Off

  Deactivates the additional interim wash block.

- Tap to select an option.

Resetting parameters

You can reset individual programmes to the factory default settings. The programme parameters and changed programme names are reset.

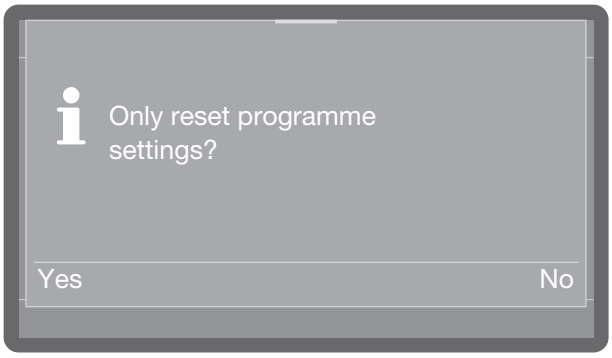

- Select Yes to reset the parameters and programme names to the factory default settings.
- Select No to cancel the process.

A0 value display

The A0 value is a measure known from medical technology for the deactivation of micro-organisms using moist heat (see ISO 15883); it is calculated based on temperature and holding time.
The “A0 value” information displayed at the end of the programme on this dishwasher is calculated based on the temperature inside the wash cabinet and the corresponding holding time. The value displayed is only a guide value. It is not compliant with ISO 15883, as the dishwasher is not a medical device.

The A0 value is displayed at the end of the programme.

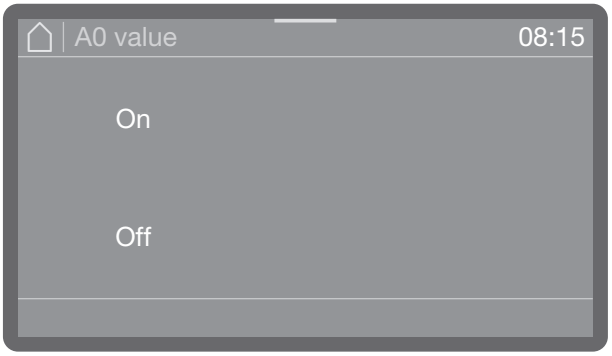

- On

  A0 value measuring is switched on and the value is displayed at the end of the programme
- Off

  A0 value measuring is switched off

■ Select an option.

Dispensing systems

The following menu allows you to activate, fill and rinse dispensing systems, to change their names if required and to set the dispensing concentration for all programmes.

Depending on the model, various dispensing systems are available for dispensing process chemicals.

Cleaning agent and rinsing agent can be dispensed either via a corresponding door dispenser (/|\ cleaning agent, ✳ rinsing agent) or via suction lances for liquid media from an external canister. It is not possible to activate both systems at the same time.

Selecting a dispensing system

The menu is saved under the following input path.

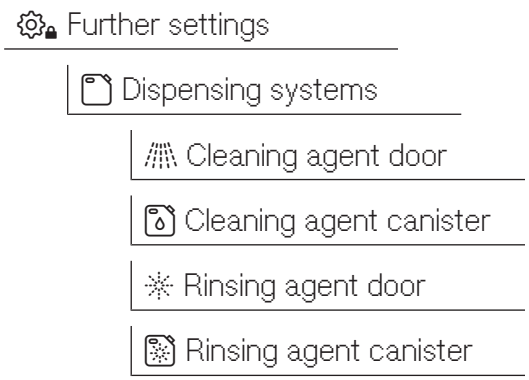

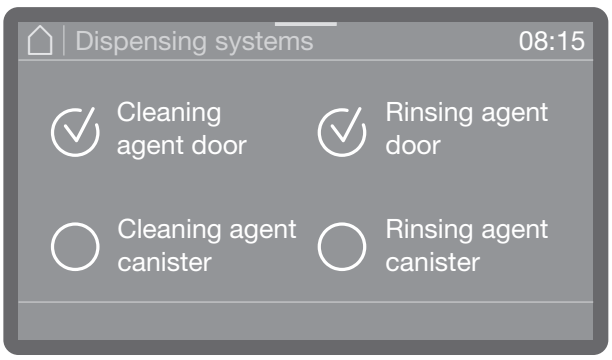

Only the available dispensing systems are displayed.

■ Select a dispensing system.

Door dispenser

Cleaning agent door

One of the following messages is displayed if you have selected Cleaning agent door.

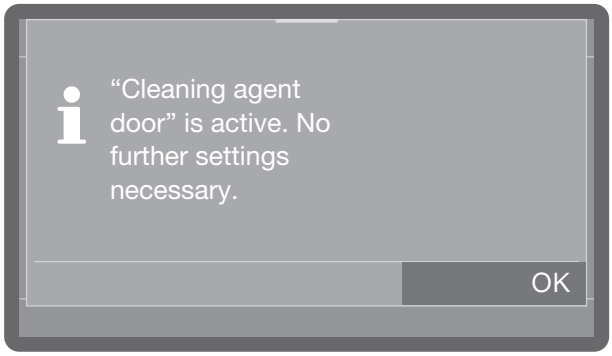

- Door dispenser is activated

■ No further settings are possible. Confirm the message by pressing OK.

If you want to change dispensing to the powder dispenser, select "Cleaning agent door" and activate it, or select the Cleaning agent canister option and deactivate dispensing.

Rinsing agent door

Refill indicator

The refill indicator indicates a lack of rinsing agent in the door dispenser. If you want to stop dispensing rinsing agent via the door dispenser, you need to switch off the refill indicator.

- On

  The display indicates a lack of rinsing agent in the door dispenser.

- Off

  The display does not indicate a lack of rinsing agent.

■ Select an option.

Activating dispensing from the canister

To activate dispensing of liquid process chemicals from external canisters, you must proceed as follows.

■ Start by selecting a dispensing system.

This selection is only available if the corresponding dispensing system is present (depending on the model).

Cleaning agent canister

Rinsing agent canister

If a rinsing agent door dispenser or a powder dispenser is present and activated (depending on the model), when you select Cleaning agent canister or Rinsing agent canister, you will first be asked if you want to switch to dispensing from the canister. There is no query if dispensing from the canister is already activated.

Deactivating dispensing from the canister

You can subsequently switch dispensing from the canisters to the door dispensers or deactivate it completely.

■ Start by selecting a dispensing system.

This selection is only available if the corresponding dispensing system is present (depending on the model).

Cleaning agent canister

Deactivate ✓

Rinsing agent canister

Deactivate ✓

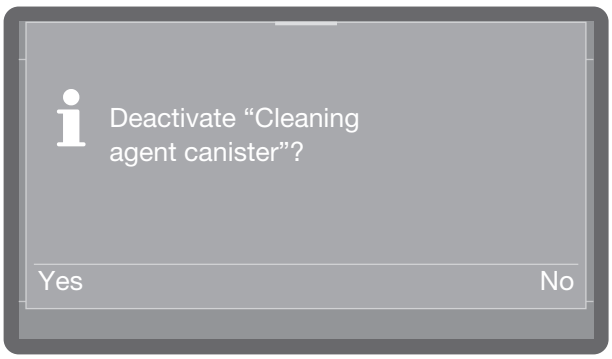

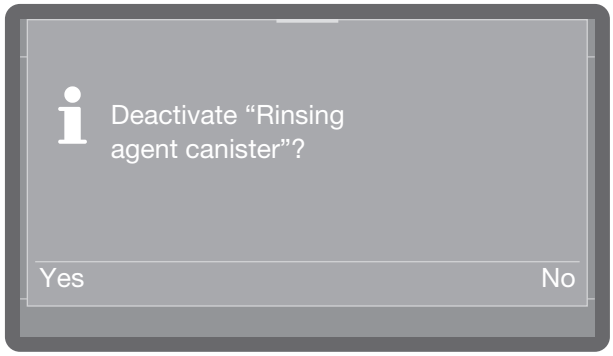

- Select Yes to deactivate dispensing from the canister. This change will take place immediately.
- If you do not want to change the setting, press the No sensor.

Dispensing concentration

The dispensing concentration for liquid process chemicals is set in the same way for all dispensing systems. The setting applies to all programmes.

This selection is only available if the corresponding dispensing system is present (depending on the model).

Rinsing agent door

Cleaning agent canister

Rinsing agent canister

- Start by selecting a dispensing system.

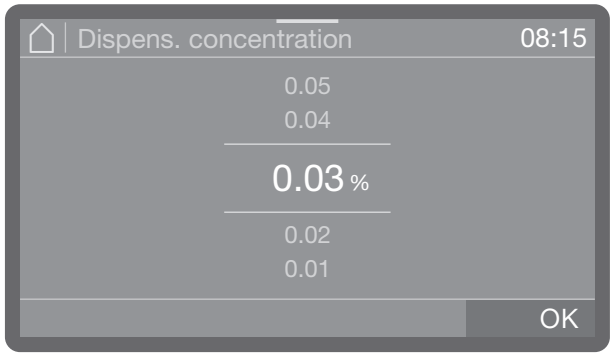

- Set the dispensing concentration.
- Press OK to save the setting.

Filling dispensing paths

See Machine functions

Rinsing dispensing paths

See Machine functions

Cycles until empty

When dispensing liquid process chemicals from external canisters, the fill level in the canister is monitored. You can use the following function to set the number of programme sequences (cycles) from which you want to be warned about the imminently empty canisters. The message is displayed after switching on the machine and at the end of the programme.
You can set the remaining cycles from Off to 10 in steps of 1, and from 10 to 100 in steps of 10.

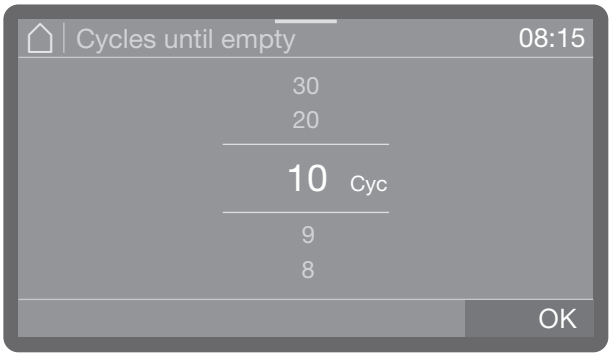

- Set the number of cycles.
- Press OK to save the setting.

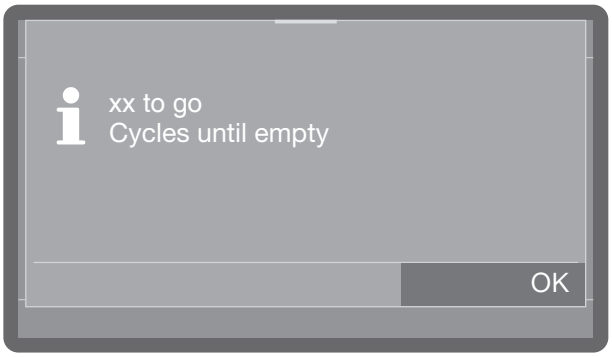

- If you have set the option to Off, no message about remaining cycles will be displayed.
- Press OK to save the setting.

DOS programme lock

Once the dispensing system has been drained, you can lock the dishwasher to prevent further use.

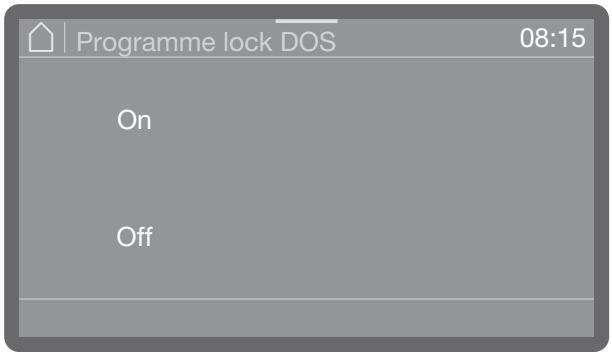

- On

  Programmes cannot be started if the dispensing system is empty.
  A programme can only be started if the dispensing system is filled with process chemicals.

- Off

  Programmes can be started regardless of the fill level of the dispensing system. A confirmation prompt is displayed, which must be confirmed if the fill level indicates that the container is empty.

■ Select an option.

Water hardness

The water hardness setting is described in “Filling the salt container”.

Reactivation notification

In order to plan wash phases more effectively, you can have the remaining number of wash cycles before the next reactivation displayed as a notification. When the set number of cycles before the next reactivation has been reached, a notification is displayed after each completed programme.
You can set the number of cycles from 0–20 cycles; at 0, no notification is displayed.

The menu is saved under the following input path.

Further settings

Note reactivation

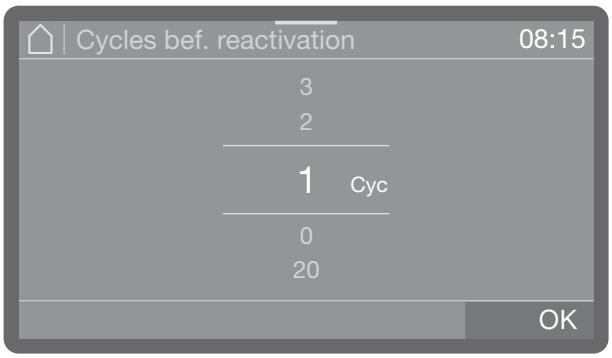

■ Set the number of cycles.

■ Press OK to save the setting.

Memory

If you are always using the same programme in a continuous sequence, you can use the memory function. This automatically suggests the most recently selected programme so that you can start the programme immediately after loading. The programme selection screen is therefore not displayed, but it is still available.

The menu is saved under the following input path.

Further settings

Memory

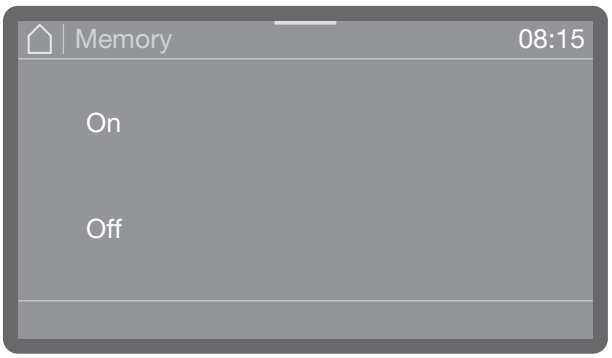

- On

  The most recently selected programme is pre-selected before the next programme starts.

- Off

  The programmes need to be selected via the programme selection screen.

■ Select an option.

PIN code

Access to relevant system settings and machine functions that require advanced knowledge of the machine and its processes can be protected by PIN codes. A PIN code consists of 3 numbers from 0–9 in any order.

The factory-assigned PIN code is 800.

If a PIN code is lost, a new code must be issued by Miele Professional Service.

Entering the PIN code

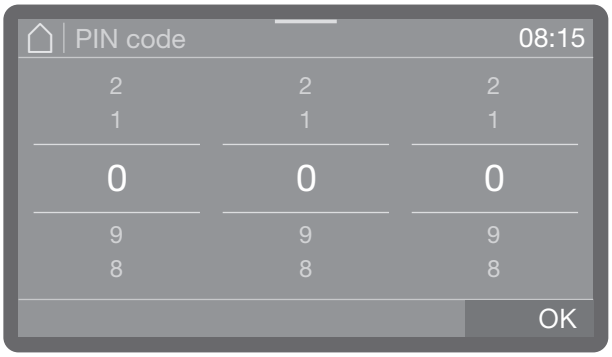

■ Set the relevant numerical values and confirm your input with OK.

You can cancel the process at any time by pressing the ⮌ sensor.

If the PIN code was entered correctly, the protected area is made available for further use.

If it is entered incorrectly, a corresponding message is displayed and the process is cancelled.

Blocking further settings or making them available

Access to the menu can be protected by a PIN code or can be made available to all users. A new code can also be assigned.

The menu is saved under the following input path.

Further settings

PIN code

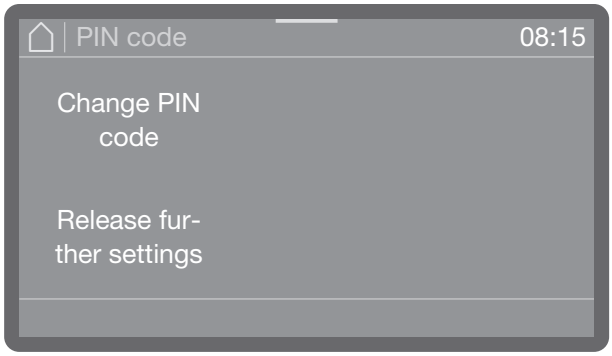

- Change PIN code

  Assign a new PIN code (see “Changing a PIN code”).

- Release fur- ther settings

  The Further settings menu is available to all users.

■ Select an option.

Changing a PIN code

When a new PIN code is entered, the old PIN code is overwritten and is permanently deleted. It is therefore not possible to reinstate the old code.
If a PIN code is lost, a new code must be issued by Miele Professional Service.

Assign a new PIN code by selecting the Change PIN code option in the menu.

■ Follow the instructions in the display and start by entering the current PIN code.

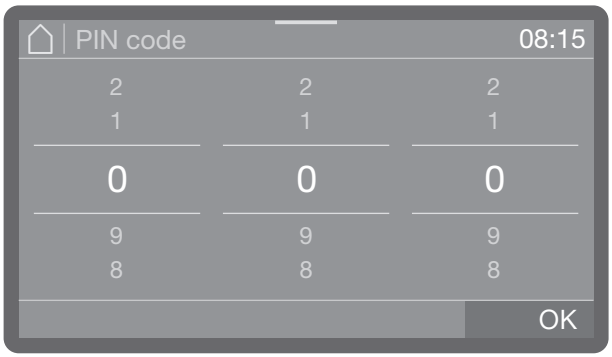

■ Set the relevant numerical values and confirm your input with OK.

You can cancel the process at any time by pressing the ⮌ sensor.

■ Then enter the new code.

■ Confirm the new PIN code by entering it again.

If both entries match, the old PIN code is replaced by the new code.

If the entries do not match, a corresponding message is shown in the display and the old PIN code remains in use.

Safe mode

When activated, Safe mode prevents incorrect operation or incorrect settings by unauthorised users.

Only released programmes can be selected and started.

If the Extended settings are freely accessible, a valid code must be entered when Safe mode is activated.
The code for the Extended settings also applies to Safe mode.

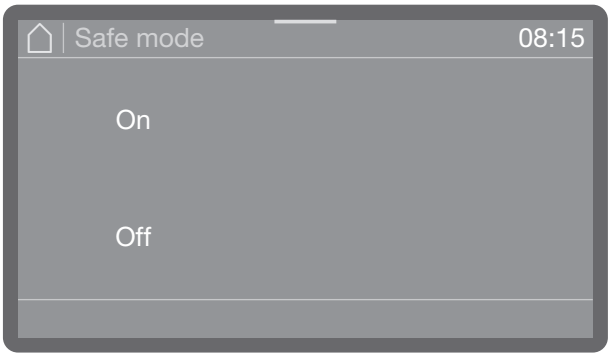

- On

  The Machine functions, Settings and Extended settings areas are protected by code and hidden.
  Only the released programmes can be selected and started.
  Programme modifications are also deactivated.

Safe mode only becomes active after switching the commercial dishwasher off and on again.

- Off

  All functions and setting options are enabled.
  The Extended settings can be protected by code.

■ Select an option.

Exiting safe mode or adjusting settings while in safe mode

To render the hidden areas visible and ready for operation again, please proceed as follows:

- Switch the dishwasher off with the ⏻ button.
- Press and hold the Start/Stop button.

The Start/Stop button is not visible when the machine is switched off.
Press in the area of the Start/Stop button.

- Switch on the dishwasher using the ⏻ button.
- Press and hold the Start/Stop button until you are prompted to enter the code.
- Enter the code and the main menu is displayed.
- You can now adjust settings or deactivate Safe mode.

If you have made adjustments and want to leave Safe mode activated, you must switch the dishwasher off and on again.

Door lock code

Opening the door during a running programme results in a programme interruption. Interruptions involve certain risks for the user and can impair the cleaning result, e.g. if dirty load items are added. For this reason, a door lock can be set up that requires a PIN code to be entered if the door needs to be opened during a programme.

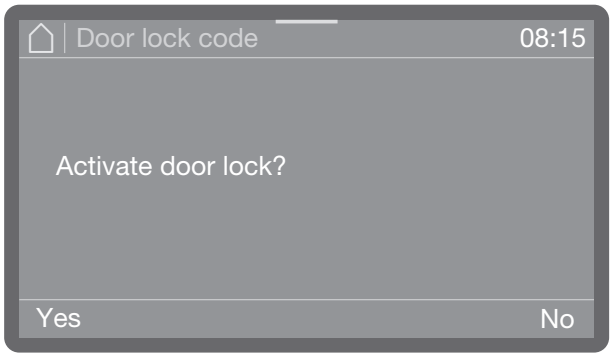

- Select Yes.

Activation of the door lock, which requires a PIN code to be entered if the door needs to be opened during a running programme. You need to assign a new PIN code (see “Changing a PIN code”).

Or

- Cancel the process by selecting No.
  The menu disappears.

Networking/Wi-Fi

Your dishwasher is equipped with an integrated Wi-Fi module.

You can connect your dishwasher to your local network in order to use digital solutions from Miele.

Once the dishwasher is connected to your local network, more menu options are added to the “Further settings” and “Networking/Wi-Fi” menu.

Check the settings of your Wi-Fi router, especially when operating several machines in the Wi-Fi network.

Make sure that your Wi-Fi network signal is strong enough at the installation site of your dishwasher.
Place the dishwasher and the router at a suitable distance from each other.

The menu is saved under the following input path.

Further settings
Network/Wi-Fi

Wi-Fi setup

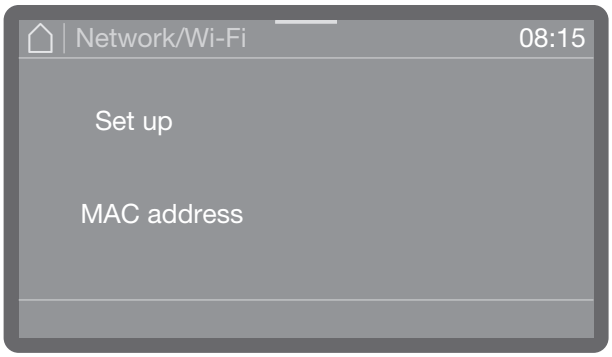

- Select the Set up menu option.

You can connect your dishwasher to your network using Via WPS or Via Soft AP.

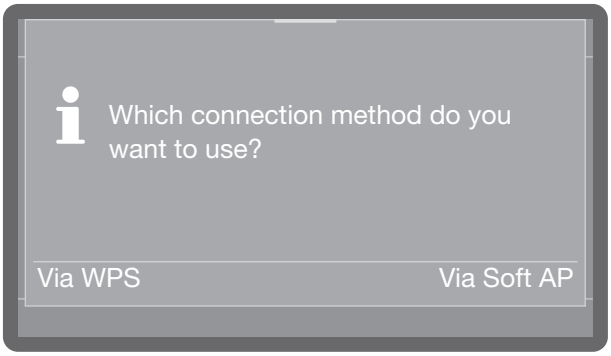

Connection via WPS

You can connect your dishwasher to your Wi-Fi network via WPS (Wi-Fi Protected Setup).

Your Wi-Fi router must support WPS.

- When asked Which connection method do you want to use?, select WPS.

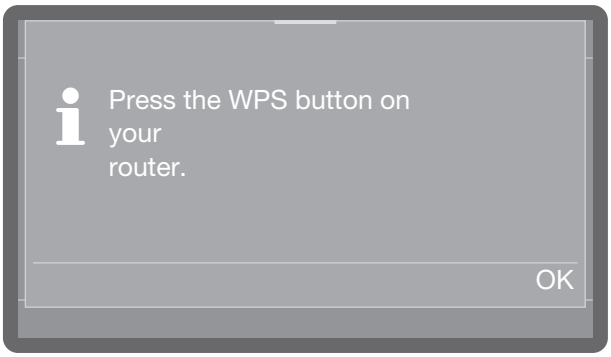

- When Press the WPS button on your router. appears in the display, activate the WPS function on your router within 2 minutes.
- Once the connection has been established, Connection established will appear in the display. Confirm the message with *OK*.

If the connection fails, you have probably not connected WPS on your router quickly enough. Repeat the steps above.

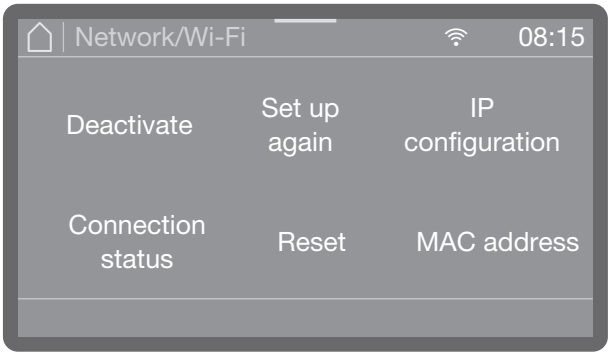

- Deactivate

  The Wi-Fi connection is deactivated but the connection options are retained. The Wi-Fi connection can be reactivated without having to repeat the connection process.

- Connection status

  Displays the IP address and the connection status of the Wi-Fi connection.

- Set up again

  Menu option for setting up a new Wi-Fi connection.

- Reset

  Resets the Wi-Fi connection. The connection options are lost and need to be set up again.

Soft AP

If Connection via WPS is not possible, you can connect the dishwasher to your local network Via Soft AP.

A Soft AP (Software Enabled Access Point) is a wireless access point provided by your dishwasher that can be used by other wireless machines in the vicinity.
With Soft AP, the dishwasher is not connected to the Internet. A Soft AP is only used to connect two machines locally via Wi-Fi.

Connecting via Soft AP

You can connect your dishwasher to your Wi-Fi network via a Soft AP (Software Enabled Access Point).

- When asked Which connection method do you want to use?, select Soft AP.

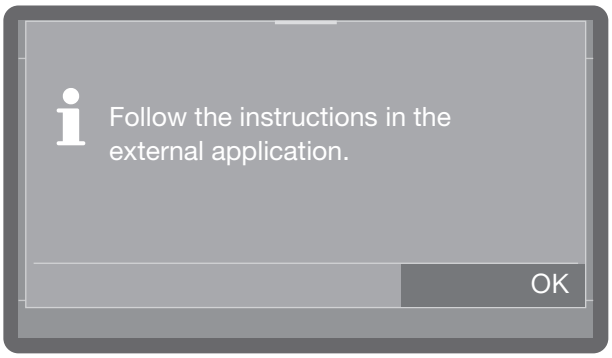

- Confirm the message by pressing *OK* and follow the instructions in the external application.

Waiting for connection will appear in the display. This message remains active for approx. 10 minutes after selection and is then closed.

- Once the connection has been established, Connection established will appear in the display.
- Confirm the message with *OK*.

RemoteUpdate

This menu option only appears if the dishwasher has been integrated into the Wi-Fi network.

When a new version of the dishwasher control system is available, you can decide whether or not to automatically update it.

The menu is saved under the following input path.

Further settings

RemoteUpdate

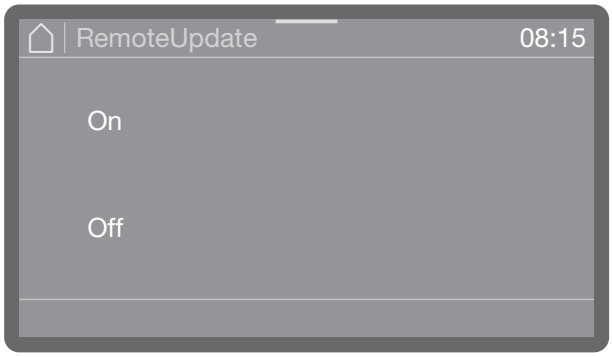

- On

  The updates are displayed and can be downloaded.

- Off

  Updates are ignored.

- Select an option.

Showroom programme

For demonstration purposes only.

The dishwasher is equipped with a Demo mode for showroom use.

The menu is saved under the following input path.

Further settings

Showroom

Software version

This displays the versions of the individual software units.

The menu is saved under the following input path.

Further settings

Software version

The relevant software version numbers appear in the display. No settings are possible.

Data plate

Display of the data plate with all important information for your dishwasher, such as the model identifier, electrical connection, etc.

The menu is saved under the following input path.

Further settings

Data plate

The data plate appears in the display. No settings are possible.

Factory default settings

If necessary, the modified programme parameters or all dishwasher parameters can be reset to the factory default settings.

The factory default settings should only be restored in consultation with the Miele Professional Service Department.

The menu is saved under the following input path.

Further settings

Factory default settings

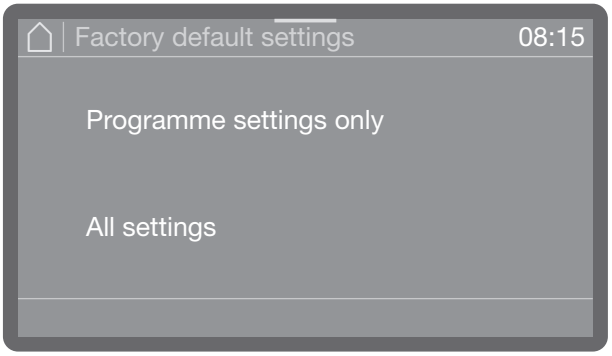

- Programme settings only

  The changes to the programme settings are reset to the factory default settings.

- All settings

  All changes are reset to the factory default settings.

■ Select an option.

Depending on the option you have chosen, you will be asked whether Programme settings only or All settings should be reset.

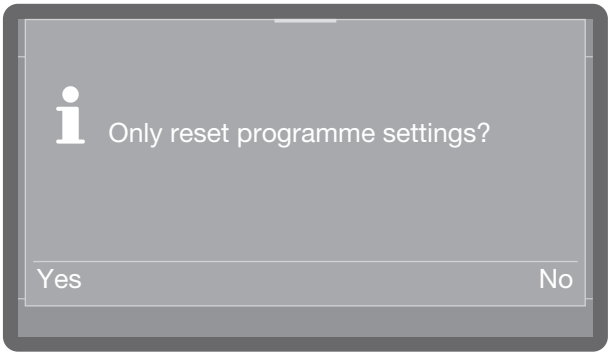

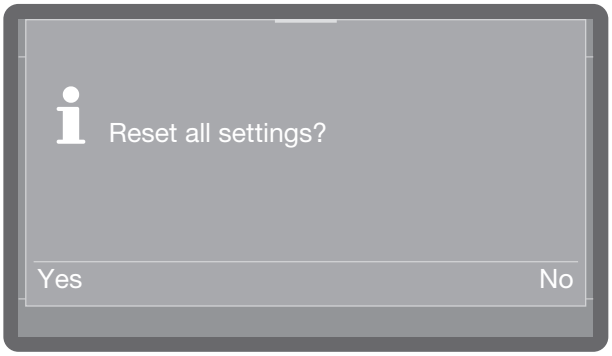

■ Selecting Yes resets the programme settings or all settings, depending on the option chosen.

Or:

■ If you do not want to reset, select No.

Legal information

This menu contains legal information such as the imprint, information on data protection and the terms of use.

The menu is saved under the following input path.

Further settings

§ Legal information

The information appears in the display. No settings are possible.

■ Exit the menu with OK.

Maintenance

To prolong the service life of the dishwasher, maintenance should be carried out **at least once a year** by Miele Professional Service.

Maintenance covers the following:

- Electrical safety according to national regulations
- Door mechanism and door seal
- Any screw connections and connectors in the wash cabinet
- Water inlet and drainage
- Internal and external dispensing systems
- Spray arms
- Filter combination
- Sump including drain pump and non-return valve
- All baskets and inserts

The following operational tests will be carried out as part of the maintenance:

- A programme will be run as a test run
- Seals will be tested for water tightness
- All relevant measuring systems will be safety tested, including fault displays
- Safety features

⚠ Soiling alters the surface.
Soiling that is left too long might become impossible to remove and could cause the external surfaces to alter or discolour.
Remove any soiling from the control panel and from the machine front straight away where possible.

⚠ All surfaces of this appliance are susceptible to scratching.
Contact with unsuitable cleaning agents can alter or discolour the external surfaces.
Only use suitable cleaning agents.

Wipe lock

- You can lock the display when cleaning the control panel and the display to prevent accidental operation during cleaning.

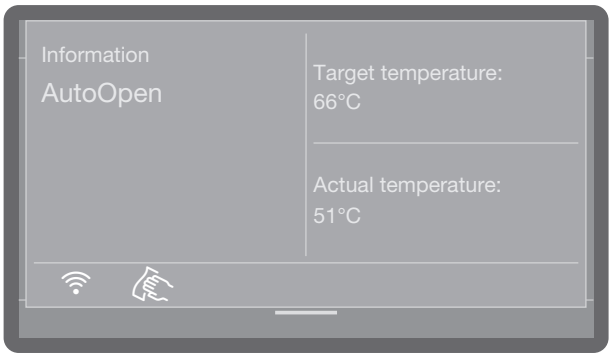

- Open the status window by tapping and dragging the orange bar at the top of the display.
- Tap the symbol.

The display is locked to prevent operation.

- Tap and hold the symbol for 5 seconds to end the wipe lock.

Cleaning the control panel

- Clean the control panel with a clean sponge and a solution of warm water and washing-up liquid, or with a clean, damp microfibre cloth. Then dry the control panel with a soft cloth.

⚠ Damage to the user interface.
Abrasive cleaning agents can damage the user interface.
Do not use abrasive cleaning agents!

Cleaning the appliance front

- To clean the stainless steel front, use a damp cloth with a solution of washing-up liquid and hot water, or with a non-abrasive cleaning agent for use on stainless steel.

To help prevent re-soiling (fingerprints, etc.), a suitable stainless steel care product can be used after cleaning.

⚠ Damage to the surfaces.
Cleaning agents containing ammonia and thinners can damage surfaces.
Avoid these products when cleaning.

⚠ Damage to the dishwasher caused by ingress of water.
Do not clean the dishwasher or its immediate vicinity with a hose or a pressure washer.
Make sure that water does not enter the dishwasher when it is being cleaned.

Cleaning the wash cabinet

The wash cabinet is largely self-cleaning, provided that the correct amount of detergent is always used.

If, despite this, limescale or grease deposits build up in the cabinet, these can be removed with a proprietary dishwasher cleaner (available from Miele).

Cleaning the door and the door seal

- Wipe the door seal and the area beneath the door regularly with a damp cloth to remove food deposits.
- Wipe off any food or drink residues that may have dripped onto the sides and hinges of the dishwasher door.
- With freestanding dishwashers that have a plinth facing, please remove spillages of food and drink from the channel that runs below the door.

⚠ Risk of cutting yourself.
There is a risk of cutting yourself.
Be cautious of sharp edges when cleaning.

These surfaces are outside the wash cabinet. They are not accessed by water from the spray arms. If soiling is not removed, mould can develop.

Cleaning filters in the wash cabinet

The filter combination in the base of the wash cabinet retains coarse soiling from the suds solution. It prevents soiling from entering the circulation system and causing blockages in the spray arms.

When Programme lock filter is activated, it is not possible to use the dishwasher without a micro-fine filter!
If the micro-fine filter is not inserted properly, it is not possible to start a programme and the following fault message Programme lock filter appears in the display.
Insert the micro-fine filter properly and make sure it is positioned correctly (see “Cleaning and care - Cleaning filters in the wash cabinet”).

The filter combination must be checked regularly and cleaned when necessary.

⚠ Risk of injury from glass splinters.
Glass splinters cannot always be detected in the filter straight away.
Take extra care when cleaning the filters.

Cleaning the coarse filter

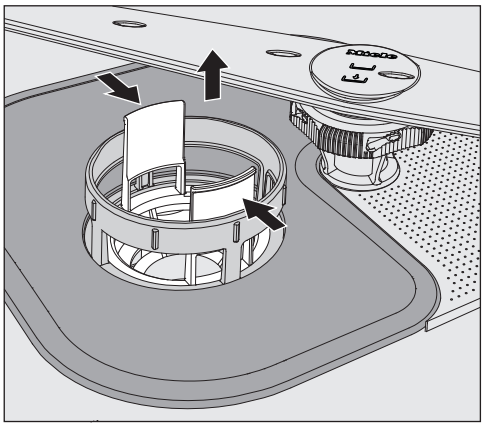

- Press the catches towards each other and remove the coarse filter.
- Rinse the filter thoroughly under running water. If necessary, use a washing-up brush to remove soiling.

- Replace the filter, making sure it engages correctly.

Cleaning the flat and micro-fine filters

- Remove the coarse filter as described before.

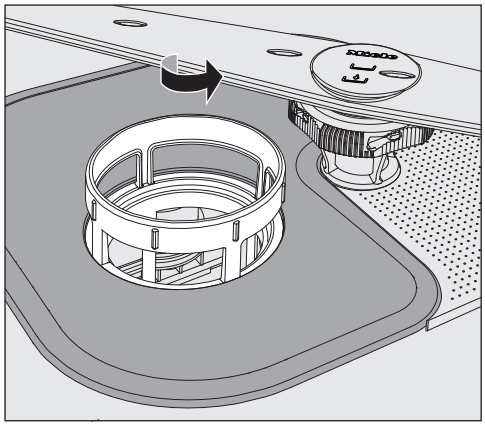

- Grasp the micro-fine filter by the upper rim and turn it in the direction of the arrow to release it.
  Then lift it out.

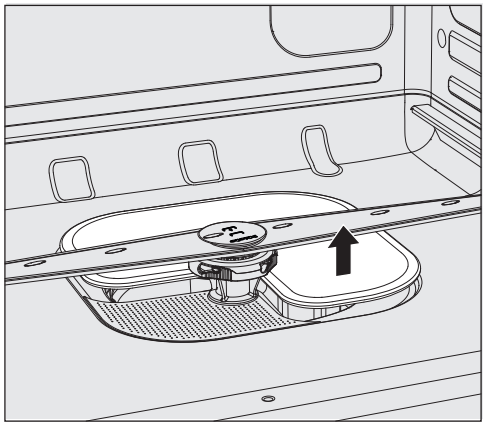

- Remove the flat filter.
- Rinse the filters under running water. If necessary, use a washing-up brush to remove soiling.

Replace the filter combination in the reverse order, turning the micro-fine filter to the left to re-engage it.
The flat filter must lie flat in the bottom of the wash cabinet.

> The spray arms may get blocked if the filters are not replaced correctly.
> Ensure that the filters are positioned correctly.

Cleaning the spray arms

The dishwasher has three different spray arms.

Particles of food can get stuck in the spray arm nozzles and bearings. The spray arms should therefore be inspected regularly.

- Switch the dishwasher off.
- Pull the **upper spray arm** downwards to remove it.

> The middle and lower spray arms are secured with a bayonet fitting.
> The middle spray arm is marked with the ↑ symbol and the lower spray arm is marked with the ↓ symbol to avoid mixing up the spray arms when they are removed.

To release the bayonet fitting, proceed as follows:

- Using the knurled nut, turn the **middle spray arm** to the left as far as it will go and then pull the spray arm downwards to remove it.
- Remove the lower basket.

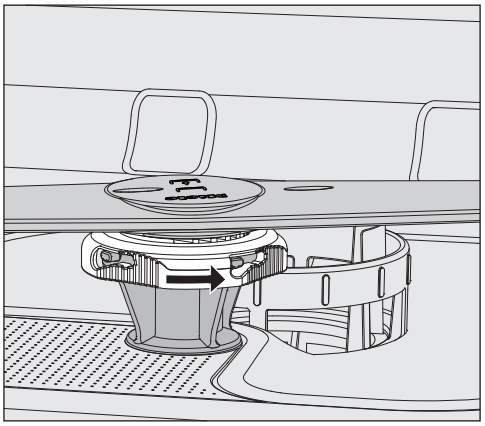

- Using the knurled nut, turn the **lower spray arm** in the direction of the arrow as far as it will go and then pull the spray arm upwards to remove it.

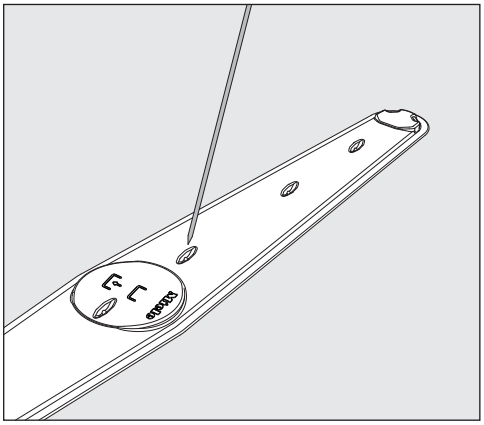

- Use a pointed object to push food particles stuck in the nozzles into the spray arm.
- Rinse the spray arms thoroughly under running water.

Refit the spray arms and check that they rotate freely.

When inserting, pay attention to the symbols on the spray arms to prevent mixing them up.

Changing the air filter (depending on the model)

The air filter for Dry+ drying must be replaced at regular intervals.
A message will appear in the display when the filter needs changing.

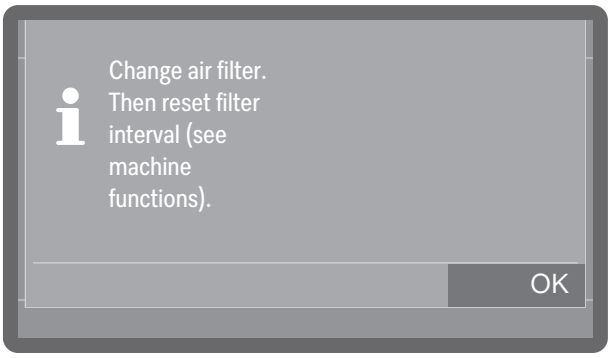

Removing the plastic support

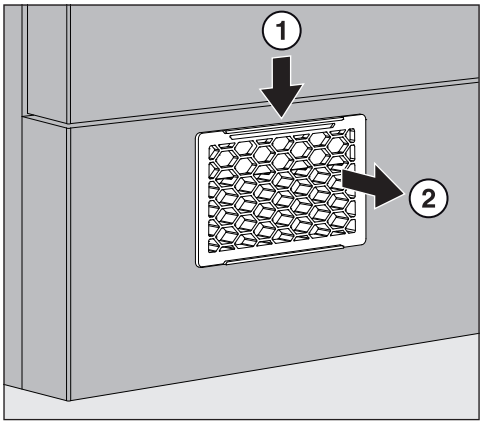

- Push the snap-fit down ① and pull the plastic support forwards to remove it ②.

Replacing the filter

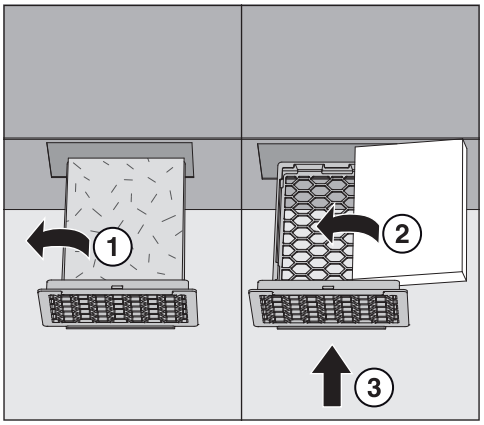

- Remove the used filter from the plastic support ①.
- Insert the new filter into the plastic support with the printed side facing down ② and push the plastic support into the slot in the plinth until it clicks into place ③.
- Reset the filter interval (see Machine functions, Filter interval).

Problem solving guide

With the help of the following guide, minor faults in the performance of the appliance, some of which may result from incorrect operation, can be remedied without contacting Miele. This will save you time and money because you will not need a service call.

Please note that a call-out charge will be applied to unnecessary service visits where the problem could have been rectified as described in these operating instructions. You should, however, note the following:

⚠ Danger due to incorrect repairs.
Unauthorised or incorrect repairs could cause personal injury or damage to the appliance.
Repairs must only be carried out by the Miele Professional Service Department, a Miele authorised service agent or a suitably qualified technician in accordance with local and national safety regulations.

Technical problems

Problem	Possible cause and remedy
The display remains dark and the Start/Stop display light is not flashing after the dishwasher has been switched on with the ⏻ sensor.	The dishwasher is not plugged in or the socket is not switched on. ■ Insert the plug and switch on at the socket.
	The circuit breaker has tripped. ■ Reset the trip switch in the circuit breaker box (see data plate for minimum protection rating).
The dishwasher stops during a programme.	The circuit breaker has tripped. ■ Reset the circuit breaker in the mains fuse box (see data plate for minimum fuse rating). ■ If the circuit breaker trips again, contact the Miele Professional Service Department.
Interruption to the power supply during operation	If a temporary power failure occurs during a programme sequence, no measures are required. The programme will continue after the interruption. If the temperature in the wash cabinet drops below the minimum value required for the programme block during the interruption to the power supply, the programme block will be repeated.

Faults with water intake or drainage

Problem	Possible cause and remedy
One of the following fault messages or notifications appears in the display:	Before rectifying the problem, you must: ■ Switch the dishwasher off with the ⏻ sensor.
F404 Cold water intake too low: check water intake. Turn on tap fully. Switch appliance off and on. Restart programme. If fault persists, contact Miele. Service telephone: Serial number:	Water intake is restricted. ■ Turn on the tap fully. ■ Clean the water inlet filter (see “Cleaning and Care”).
F541 Water drainage: switch appliance off and on. Start “Drain” programme. Clean filter combination and non-return valve. If fault persists, contact Miele. Service telephone: Serial number:	Water drainage fault. There might be water in the wash cabinet. ■ Clean the filter combination (see “Cleaning and care”). ■ Clean the drain pump (see “Maintenance”). ■ Clean the non-return valve (see “Problem solving guide”). ■ Remove any kink or loop in the drain hose.

Cancel with fault code

If a programme is cancelled and a fault code appears, e.g. Fault F XXX (where XXX represents a number), there could be a serious technical fault.

In the event of a programme being cancelled and a fault code being shown:

- Switch the dishwasher off with the ⏻ sensor.
- Wait approximately 10 seconds before switching the dishwasher on again with the ⏻ sensor.
- Start the previously selected programme again.

If the same fault message appears again:

- Make a note of the fault message.
- Switch the dishwasher off with the ⏻ sensor.
- Contact the Miele Professional Service Department.

Please also read the notes regarding the following fault codes.

Problem	Possible cause and remedy
Fault F 404-405	If Check water inlet appears in the display, the control system is checking the water intake approx. every 30 seconds. If, after three attempts, water is not getting into the dishwasher, one of these fault numbers will appear in the display and the programme will be cancelled. ■ Turn on the tap fully. ■ Switch the dishwasher off and back on again. ■ Select the required programme. ■ Press the *Start/Stop* sensor.
Fault F 407-408	Water intake is restricted. If the flow pressure is too low, one of these fault codes will appear in the display and the programme will be cancelled. ■ The flow pressure at the water connection is too low (see “Technical data”). Contact the Miele Professional Service Department for advice.
Fault F 413-414	Water intake is restricted. If the flow pressure is too high, one of these fault codes will appear in the display and the programme will be cancelled. ■ The flow pressure at the water connection is too high (see “Technical data”). Contact the Miele Professional Service Department for advice.
Fault F 433	The door was obstructed when closing and cannot be drawn into the final closed position. ■ Remove the obstruction from the door closing area.
Fault F 438	Heavy objects in front of the machine can impede the automatic opening of the door by the Comfort door lock. ■ Do not place (heavy) objects in front of the door of the dishwasher.
Fault F 446	The door lock is defective. ■ Call Miele.

Problem	Possible cause and remedy
Fault F 492, 541	The programme has not started properly. There might be water in the wash cabinet. ■ Clean the filter combination (see “Cleaning and care”). ■ Clean the non-return valve (see “Problem solving guide”).
Fault F 550	The Waterproof system has reacted. ■ Turn off the tap. ■ Call Miele.
Fault F 578	The peak-load cut-out has lasted longer than 2 hours. ■ Have your electrical system and your energy management system tested by a suitably qualified person.

Door

Problem	Possible cause and remedy
The door opens again after being closed	If the door is closed with too much force, the Comfort door locking mechanism will open it again. ■ Guide the door into the door lock with less force.
Hot wash cabinet: risk of injury. Take care when opening the door.	The temperature in the wash cabinet is over 67 °C when the ⊶ sensor is pressed. ⚠ When the door is opened, hot steam and process chemicals can escape! ■ Open the door only when strictly necessary.
The door is open a fraction and cannot be closed using the ⊶ sensor.	This is not a fault. The Comfort door lock has opened the door slightly at the end of the programme. ■ Open the door. It can now be closed completely again using the ⊶ sensor.
F433 Door blocked: remove blockages in door area. Switch appliance off and on.	A protruding load item is obstructing the door. ■ Arrange the load item so that it does not obstruct the door. ■ Close the door.
	The Comfort door lock is blocked. ■ Try to open the door carefully (without using force) by pulling on the door handle. If the door is still blocked: ■ Open the door using the emergency release. ■ Close the door and try to open it again using the ⊶ sensor. If it is still blocked: ■ Contact the Miele Professional Service Department.
Anti-trap guard: to continue, open the door	This is not a fault! The door is locked while the door locking mechanism retracts to the lock position. ■ Open the door and wait until the door locking mechanism reaches its final position.

General problems with the dishwasher

Problem	Possible cause and remedy
The dishwasher does not respond to any sensor. The indicator lights and display are dark.	The dishwasher is switched off after 10 minutes to save energy. ■ Press the ⏻ sensor to switch the dishwasher back on.
The display is dark and the *Start/Stop* sensor is flashing.	The dishwasher is switched to standby mode after 10 minutes to save energy. ■ Press any sensor to exit standby mode.
The following fault message appears in the display before the programme starts: Salt container lid: check fit.	The salt container is not closed properly. ■ Close the container properly.
	Salt residues are preventing it from closing. ■ Remove the salt residues from the refilling funnel, the lid and the seal. Do **not** use running water to rinse away salt residues as this can cause the container to overflow. ■ Close the container properly.
The following fault message appears in the display: F533 Salt container: switch appliance off and on. Close flap in the door correctly. If fault persists, contact Miele. Service telephone: Serial number:	The salt container flap has sprung open during a programme. ⚠ When the door is opened, hot steam and process chemicals can escape! ■ Open the door and close the container flap.
The following fault message appears in the display: Programme lock filter	The filter combination in the base of the wash cabinet is not inserted correctly. The programme does not start. ■ Open the door and insert the entire filter combination correctly (see “Cleaning and care – Cleaning filters in the wash cabinet”).
The detergent dispenser lid cannot be closed properly.	Residual cleaning agent is blocking the catch. ■ Remove the cleaning agent.
At the end of a programme there is a film of moisture on the inside of the door and the interior walls.	This is not a fault. It is caused by the drying system. The moisture will dissipate after a short while.
Water remains in the wash cabinet at the end of a programme. **(This does not apply to the Super short programme)**	Before rectifying the problem, you must: ■ Switch the dishwasher off with the ⏻ sensor.
	The filter combination in the wash cabinet is clogged. ■ Clean the filter combination (see “Cleaning and care”).
	The drain pump or non-return valve is blocked. ■ Clean the drain pump or the non-return valve (see "Maintenance").
	The drain hose is kinked. ■ Remove any kinks from the drain hose.
	The on-site drain siphon is blocked. ■ Check and clean the drain siphon.

Problem	Possible cause and remedy
Peak load cut-out: heating mode temporarily disabled.	This is not a fault! Your energy management system has detected a peak load in the energy supply. Some components in the dishwasher stop operating for the duration of the peak load cut-out.
Cycles until empty	This is not a fault! The level of process chemicals has reached the value specified for the remaining wash cycles and this is indicated in the display.
Temperature compensation after door opened: programme will continue in min	This is not a fault! If the door is opened during a programme sequence and the temperature in the wash cabinet is above 60 °C, pressure equalisation takes place once the door is closed.

Noises

Problem	Possible cause and remedy
Knocking noise in the wash cabinet.	A spray arm is knocking against an item in a basket. ■ Interrupt the programme and rearrange the items which are obstructing the spray arm.
Rattling noise in the wash cabinet.	Items of crockery are insecure in the wash cabinet. ■ Interrupt the programme and rearrange the load.
	A foreign object (e.g. a cherry stone) has become lodged in the drain pump. ■ Remove the foreign object from the drain pump (see “Maintenance - Cleaning the drain pump and non-return valve”).
Knocking noise in the water pipes.	This may be caused by the on-site installation or the cross-section of the piping. However, this will not affect the functioning of the dishwasher in any way. ■ If in doubt, contact a suitably qualified plumber.

Unsatisfactory washing result

Problem	Possible cause and remedy
The crockery is not clean.	The items were not loaded correctly. ■ Please observe the instructions in “Loading the dishwasher”.
	The programme was not suitable for the load. ■ Select a suitable programme (see “Programme chart”).
	Not enough cleaning agent was dispensed. ■ Increase the quantity of cleaning agent.
	The cleaning agent used is not suitable for the type of soiling present. ■ Switch to another detergent.
	Items are blocking the path of the spray arms. ■ Carry out a rotation check and if needed rearrange the items so that the spray arms can rotate freely.
	The filter combination in the wash cabinet is not clean or was incorrectly installed. This may have caused the spray arm jets to become blocked. ■ Clean and/or install the filter combination correctly. ■ Clean the spray arm jets, if necessary (see “Cleaning and care”).
	The non-return valve is open and blocked. Dirty water has flowed back into the wash cabinet. ■ Clean the drain pump and the non-return valve (see “Maintenance”).
	If necessary, alter the temperature and/or the holding time of the programme being used. ■ Change the relevant parameters for the programme. (see “Further settings – Additional functions”).
Smearing appears on glassware and cutlery. There is a bluish sheen on the surface of glassware; film can be wiped off.	The rinsing agent dosage is set too high. ■ Reduce the dosage (see “Further settings, Additional functions, Dispensing systems”).
Dishes are not dry or cutlery and glasses are flecked.	The amount of rinsing agent may be insufficient, or the rinsing agent reservoir is empty. ■ Replenish the rinsing agent, increase the dosage or change the brand of rinsing agent used (see “Adding rinsing agent”).
The drying result is unsatisfactory for a dishwasher with Dry+.	This is not a fault. The drying time was not sufficient for the crockery. ■ Extend the active drying time (see “⚙ Settings – Dry+”).

Problem	Possible cause and remedy
White residue is visible on crockery. Clouding occurs on glassware and cutlery; film can be wiped off.	Not enough rinsing agent was added. ■ Increase the dosage (see “Further settings, Additional functions, Dispensing system”).
	There is no salt in the salt reservoir. ■ Fill the salt reservoir (see “Filling the salt reservoir”).
	The water softener is programmed too low for the water hardness level. ■ Programme the water softener to the correct value (see “Further settings, Water hardness”).
Glassware has a brown or blue tinge, and film cannot be wiped off.	This is caused by ingredients in the cleaning agent. ■ Switch to another detergent.
Glassware is dull and discoloured; film cannot be wiped off.	The glassware is not dishwasher-proof. The surfaces are affected. ■ Purchase glassware which is dishwasher-proof.
Tea or lipstick stains have not been completely removed.	The wash temperature of the selected programme was too low. ■ Select a programme with a higher main wash temperature.
	The bleaching effect of the detergent is too low. ■ Switch to another detergent.
Plastic items are discoloured.	Natural dyes, e.g. from carrots or tomatoes may be the cause. The amount of detergent used or its bleaching effect was not sufficient to deal with natural dyes. ■ Use more cleaning agent (see “Operation, Adding detergent”). Discoloured plastic items will not regain their original colour.
There are rust stains on cutlery.	The affected items are not corrosion resistant. ■ Purchase cutlery which is dishwasher safe.
	The “Cold” programme was not run after dishwasher salt was added. Traces of salt have got into the normal wash cycle. ■ Always run the “Cold” programme without any load items after refilling the salt.
	Rust or superficial rust has built up in the wash cabinet, e.g. due to an excessively high iron content in the water or rust on other load items. ■ Discard any rusty load items.

Cleaning the water inlet filter

A filter is incorporated in the screw thread to protect the water inlet valve. If the filter is soiled, insufficient water flows into the wash cabinet.

⚠ Risk of electric shock from mains voltage.
The plastic housing of the water connection contains an electrical valve. The housing must not be dipped in water.

- Disconnect the dishwasher from the mains power supply.
  To do this, switch off at the socket and withdraw the plug.
- Turn off the tap.
- Unscrew the water inlet valve.

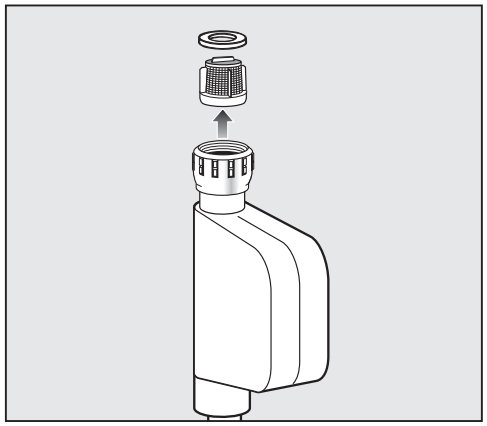

- Take the sealing washer out of the screw thread.
- Using combination or pointed pliers, take hold of the plastic filter bar and remove the filter.
- Rinse the filter under running water.
- Reassemble in reverse order.

Screw the threaded union securely back onto the tap. Slowly turn on the tap. If water drips out, tighten the connection.

Never forget to put the filter back in place after cleaning.

Cleaning the drain pump and non-return valve

If the water has not been pumped away at the end of a wash programme (excluding the Super short programme), there may be a foreign object blocking the drain pump or the non-return valve. These are easy to remove.

- Disconnect the dishwasher from the electrical supply (switch the machine off, unplug it, or disconnect or disable the circuit breaker).
- Take the filter combination out of the wash cabinet (see “Cleaning and care”).

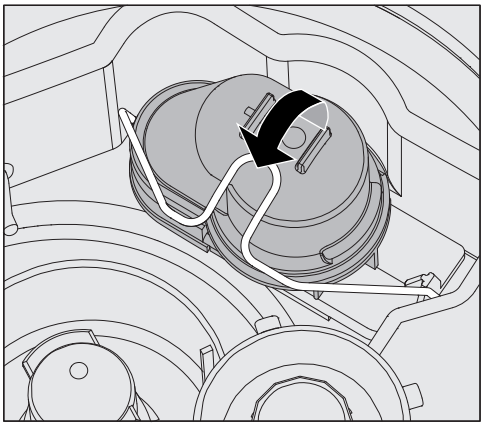

- Open the locking clamp.
- Lift out the non-return valve and rinse well under running water.
- Make sure that the vent on the external part of the non-return valve is not blocked (This vent is only visible when the non-return valve has been taken out). If it is blocked, use a pointed object to release the blockage.

The drain pump is situated under the non-return valve (see arrow).

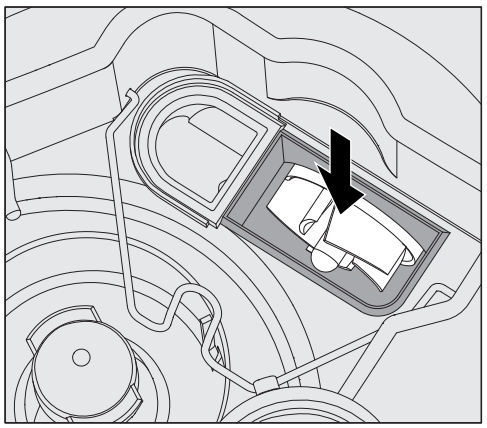

- Check the area around the drain pump for foreign objects (watch out for glass splinters which could cause injury) and remove them before replacing the non-return valve.
- Carefully replace the non-return valve and secure it with the locking clamp.

Programme chart

Programme	Application	Cleaning agent (if liquid cleaning agent is **not** dispensed) The following dosages are based on Miele detergents. **Please follow the manufacturer's instructions.**
Short	"Quick programme" for lightly soiled load items with fresh, easily removed food residues.	20–25 g or 1 tab
Universal	For normally soiled load items.	20–25 g or 1 tab
Intensive	For heavily soiled load items.	20–25 g or 1 tab
Super short	"Quick programme" for lightly soiled load items that are in continual use and that have fresh, easily removed food residues.	20–25 g **placed on the inside of the door**
Hygiene	For load items that must be hygienically reprocessed.	20–25 g or 1 tab
Hygiene plus (depending on the model)	For load items that must be hygienically reprocessed.	20–25 g or 1 tab
Glasses	Special glassware programme.	20–25 g or 1 tab
Beer glasses (depending on the model)	Special programme for beer glasses. The glasses do not dry through their own heat after the programme has ended and may have to be dried by hand.	20–25 g or 1 tab
Cutlery	Special programme for cutlery.	20–25 g or 1 tab
Plastics	Special programme for plastic items and other lightweight load items.	20–25 g or 1 tab
EnergySave	Energy-saving programme offering the most efficient combined energy and water consumption for normally soiled crockery.	20–25 g or 1 tab
Reactivation	Manual reactivation. This can be run to avoid being forced to run a reactivation programme during busy periods.	
Cold	Use for rinsing heavily soiled load items and to prevent soiling from drying on. Also used for flushing salt residues out after refilling the salt container.	
Drain	For pumping away the water when, for example, the water for the Super short programme needs to be renewed or a programme has been cancelled.	

Programme sequence					
1. Pre-wash	2. Pre-wash	3. Main wash (1)/(2)	4. Interim rinse	5. Interim rinse	6. Final rinse (1)/(2)
X		X 66 °C 1 min		(X)	X 85 °C 1 min
X		X 66 °C 2 min	X	(X)	X 85 °C 1 min
X	X	X 66 °C 3 min	X	(X)	X 85 °C 1 min
		X 55 °C 30 s		(X)	X ***)** 55 °C 30 s
X		X 70 °C 10 min	X	(X)	X 60 °C 1 min
X		X 70 °C 10 min	X	(X)	X 60 °C 1 min
		X 50 °C 1 min	X	(X)	X 50 °C 1 min
		X 50 °C 1 min	X	(X)	X – (3) 1 min
	X	X 60 °C 2 min	X	(X)	X 55 °C 1 min
X		X 50 °C 5 min	X	(X)	X 60 °C 1 min
		X 46 °C 15 min	X	(X)	X 50 °C 2 min
Reactivation sequence			X		
	X				

X Scheduled programme block

(X) Additional programme block; deactivated ex works (for activation, see “Extended settings – Programme parameters”)

– Programme block not available for this programme or programme not available for this model

① Temperature adjustable from 30–85 °C
Except:
– PFD 407 adjustable from 30–93 °C
– Super short programme adjustable to max. 70 °C

② Holding time adjustable from 0–10 minutes
Except:
– Super short programme adjustable from 0–255 seconds

③ Cold water without rinsing agent

After sales service

If, despite following the notes in these operating instructions, you are unable to rectify a problem, please contact the Miele Professional Service Department, quoting the fault code shown in the display.

Contact details for Miele are provided at the back of these operating instructions.

■ When contacting the Professional Service Department, you will need the model number and 8-digit machine number of the dishwasher.

Both are shown on the data plate, located at the top of the door.

Installation

⚠ Damage caused by condensation.
In order to reduce the risk of damage from condensation, the furniture in the area around the dishwasher should be designed for commercial use.
Only use furniture that is designed for commercial use.

The dishwasher must be stable and horizontal. Any unevenness in the floor level and height of the machine can be compensated for by adjusting the four feet.

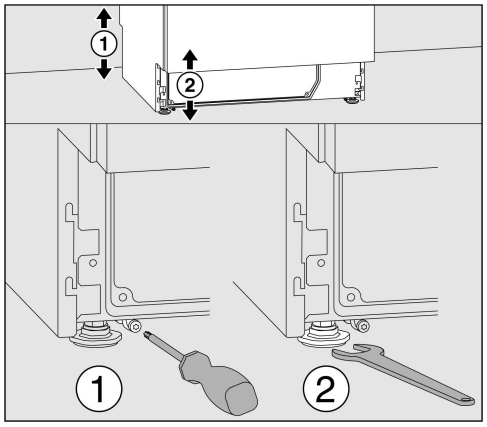

The machine height can be adjusted from 820–880 mm using the machine feet. Dishwashers with lids have an additional 15 mm in height.
The front machine feet can be adjusted with an open spanner (spanner size 13); the rear ones can be adjusted using the enclosed sliding runners and a T20 Torx screw.
If the runners of the rear machine feet are not fitted, the machine feet can also be adjusted with the open spanner.
They are adjusted upwards when turned clockwise and downwards when turned anti-clockwise.

When using the glide runners, make sure you distinguish between the right and left sides.

If the dishwasher is to be installed next to other machines and furniture or in a recess, an installation space measuring at least 600 mm in width and 600 mm in depth is required.

Dishwashers with active drying require a space measuring 580 mm in depth.

Built-under installation

⚠ Risk of the machine tipping.
To ensure stability, a built-under dishwasher must only be installed beneath a continuous worktop that is bolted to the adjacent cabinetry.
Install the dishwasher underneath a bolted continuous worktop.

If the dishwasher is to be installed beneath a continuous worktop, an installation space measuring at least 600 mm wide, 600 mm deep and 820 mm high is required.
Dishwashers with active drying require an installation space measuring 580 mm in depth.

Dishwashers with a plinth return are supplied with a plinth filler panel. This can be fitted instead of a skirting board.

When adjusting the dishwasher height, the feet must not be unscrewed by more than 60 mm.

Hose holder

The supplied hose holders can be used to lay the power cable and the hoses for supply and waste water in a way that saves space.
The hose holder prevents hoses from kinking or crushing when installing the machine in tight recesses.
The power cable and hoses can be laid either on the left or the right, depending on the connection situation.

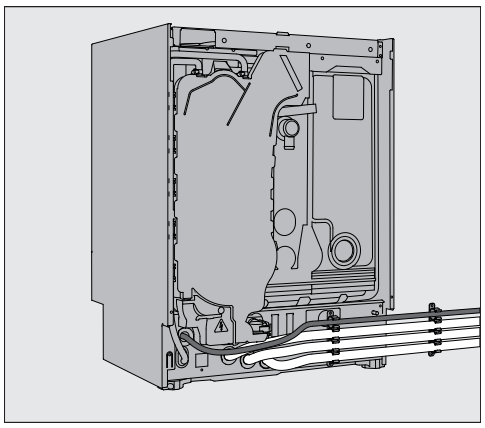

Adjustable plinth panel (depending on the model)

Dishwashers with internal dispensing or active drying have an adjustable plinth panel.

- Level the dishwasher.
- Open the dishwasher door halfway and loosen the two screws now visible at the top of the plinth panel.
- Pull the plinth panel upwards first and then forwards.
- Loosen the two screws on the right and left of the plinth behind the panel.
- Pull the inside of the plinth down to the floor.
- Tighten the two screws again.
- Reassemble the plinth panel by following the instructions above, but in reverse order.

Removing the machine lid

If the dishwasher is fitted with a lid, it can be removed as follows:

- Remove both securing screws on the back of the dishwasher with a screwdriver.
- Open the door.

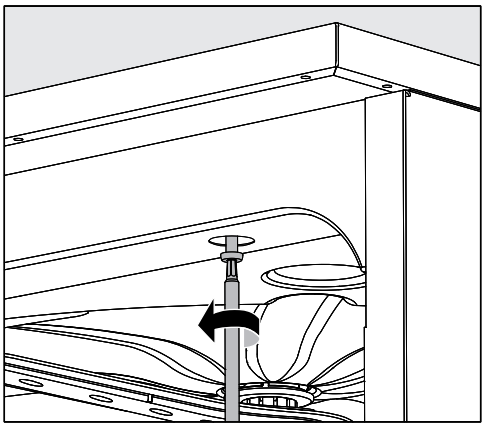

- Unscrew the left and right fastening screws with a screwdriver.
- Lift the machine lid upwards to remove.

Levelling and securing the dishwasher

To guarantee stability, the dishwasher must be secured to the worktop after levelling.

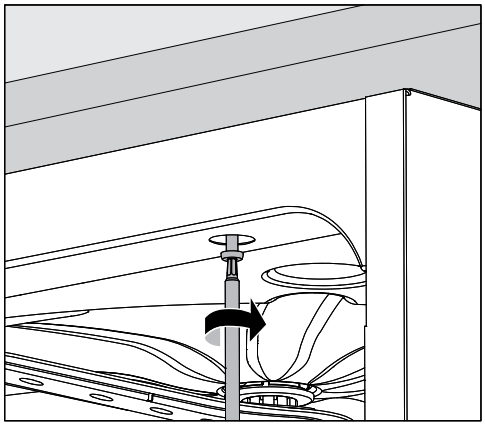

- After levelling, secure the dishwasher to the continuous worktop.
  With the door open, screw into the worktop through the holes in the front trim on the left and right-hand sides of the dishwasher.

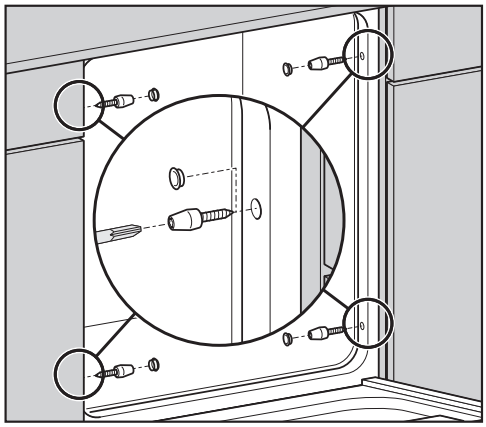

With stainless steel or stone worktops, the dishwasher must be secured at the sides to the left and right adjacent cupboards with two screws on each side.
Special screws (4 x 27/Torx T20) are supplied in the accessory companion pack.
Holes must be drilled in the side panel in front of the door seal for this.
In the case of built-under dishwashers, the holes are already provided in the side panels.

The gaps between built-under dishwashers and adjacent cabinets or machines must not be filled with silicone sealant as this could compromise the ventilation of the circulation pump.

Depending on the built-under installation situation, the cover foil supplied in the scope of delivery can be attached to the lower edge of the worktop. The cover foil protects the lower edge of the worktop from steam damage.

Moving the dishwasher

Before moving the dishwasher, screw in the adjustable feet fully so that they do not get damaged.

⚠ Component damage caused by carrying.
Do not lift the dishwasher by any protruding components, e.g. the control panel.
These could break off.
Do not hold onto protruding components when moving the dishwasher.

⚠ Damage caused by transportation using a hand trolley.
Using a hand trolley to subsequently move the dishwasher may cause damage to the machine.
Only transport the dishwasher on a hand trolley in its original packaging. For subsequent moves, the dishwasher must be placed on a continuous base to avoid damage.

Electrical connection

⚠ Danger caused by improper electrical connection
All electrical work must be carried out by a suitably qualified electrician in accordance with local and national safety regulations.
Ask a qualified specialist to complete the electrical connection work.

- The electrical installation must comply with current local and national safety regulations.
- The connection to the power supply must comply with national regulations (plug and socket must be accessible for service and maintenance work after the machine has been installed). An electrical safety test must be carried out after installation and after any service work.
- If the dishwasher is hard wired to the power supply, connection should be made via a mains switch with all-pole isolation. The mains switch must ensure a 3 mm gap between all open contacts, and must be able to be locked in the off position. The means for disconnection must be incorporated in the fixed wiring in accordance with the wiring rules.
- For increased safety, it is recommended to protect the machine with a suitable residual current device (RCD) with a trip current of 30 mA.
- Equipotential bonding should be carried out if required.
- The mains connection cable may only be replaced by an original Miele spare part.
- For technical data see data plate or wiring diagram supplied.

The machine must only be operated with the voltage, frequency and fuse rating shown on the **data plate**.

This machine **can be converted to a different type of power supply** in accordance with voltage and frequency shown on the data label, the conversion diagram and wiring diagram supplied.

The **conversion diagram** and the **data plate** are on the dishwasher or supplied with it.

Equipotential bonding connection

There is a screw connection point marked ⏚ at the back of the dishwasher, to which additional equipotential bonding can be connected.

Peak load cut-out

The dishwasher is suitable for use in an energy management system. For this purpose, the dishwasher must be technically adapted and the controls reset by the Miele Professional Service Department.

Please contact the Miele Professional Service Department for further information.

Load management

In the event of a peak load cut-out, some dishwasher components, such as the heater elements, will be switched off for a while. The dishwasher will remain on during this period and the current programme will not be interrupted. If one of the components that is switched off is needed during the current programme stage, the programme duration will simply increase for the duration of the load cut-out.

Load cut-out is indicated by the following message, e.g.:

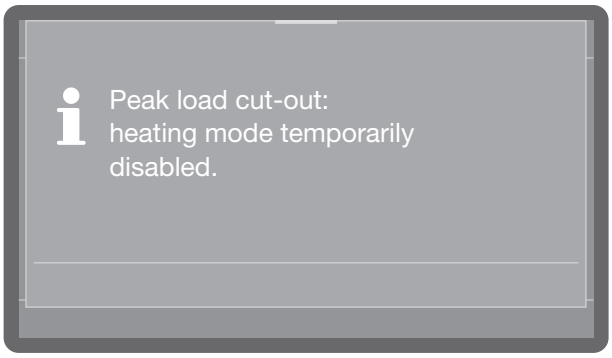

Connecting the water inlet

⚠ Health risk posed by process chemicals
Water in the dishwasher must not be used as drinking water.
Do not drink water from the dishwasher.

Do not re-use removable hose sets. Use the hose sets supplied with the dishwasher.

- The machine must be connected to the water supply in strict accordance with current local and national water authority regulations (e.g. Plumbing Code of Australia (PCA)).
- The water used must at least comply with national regulations for drinking water quality. If the water supply has a high iron content, there is a risk of corrosion occurring on load items in the dishwasher, as well as the dishwasher itself. If the chloride content of the water exceeds 100 mg/l, the risk of corrosion to items being cleaned in the dishwasher will be further increased.
- In certain regions (e.g. mountainous regions), the water composition may cause precipitates to form, requiring the use of softened water for the dishwasher.
- The water pressure (flow pressure) must amount to at least 200 kPa pressure (100 kPa = 1 bar). At a water pressure (flow pressure) below 200 kPa, the water inlet time extends automatically. The maximum permissible static pressure amounts to 1000 kPa (overpressure). If the water pressure does not lie in the 200–1000 kPa range, contact the Miele Professional Service Department for advice.
- The dishwasher is supplied as standard for connection to cold water (blue coded hose) **and** hot water up to max. 65 °C (red coded hose). Connect the inlet hoses to the taps for cold and hot water.
- If no hot water supply is available, the inlet hose with the **red** marking for the hot water connection must also be connected to the cold water supply.
- A tap with a 3/4 inch screw thread must be provided on site for the connection. It should be easily accessible so that the water supply can be turned off when the dishwasher is not in use.
- The inlet hose is a DN 10 pressure hose measuring approx. 1.7 m in length, terminating in a 3/4 inch screw thread. On no account may the inlet filter in the screw thread be removed.

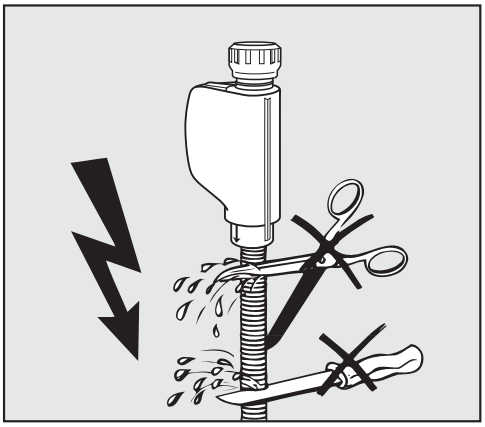

⚠ Damage caused by shortening the hose.
Do **not** shorten or otherwise damage the water inlet hoses supplied with the machine.
Do not shorten the inlet hoses.

Please also refer to the installation plan provided.

Water connection

This appliance must be installed according to AS/NZS 3500.1 and AS/NZS 3500.2. This dishwasher has been supplied separately with a backflow prevention device (dual check valve). The non-return valve (dual check valve) supplied separately must be attached to the cold and hot water connection between the tap and the water intake hose.

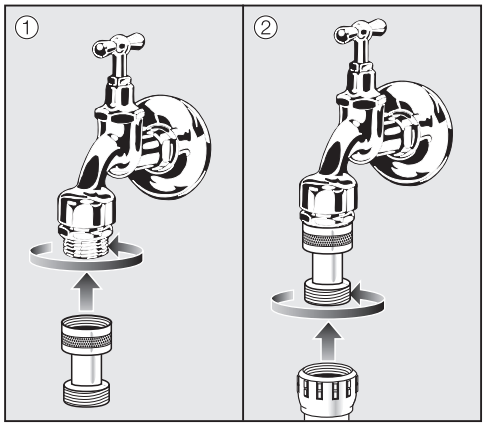

- Screw the non-return valve onto the tap.
- Screw the water inlet hose onto the thread of the non-return valve.

Turn on the tap gradually to test for leaks. If there is a leak, the connection might not be on securely, or it may have been screwed on at an angle. Unscrew and reconnect the water correctly before tightening it.

Connecting the drain hose

- The machine drainage system is fitted with a non-return valve, which prevents dirty water from flowing back into the dishwasher via the drain hose.
- The dishwasher drainage hose should preferably be connected to a **separate** on-site drain for the dishwasher only. If no separate connection is available, we recommend connecting it to a dual-chamber siphon. The on-site connection must be between 0.3 m and 1 m in height, measured from the lower edge of the machine. If the connection is lower than 0.3 m, the drain hose must be placed in an arc at least 0.3 m high.
- The dishwasher is supplied with approx. 1.5 m of flexible drain hose with an internal diameter of 22 mm. Hose clips are supplied with the dishwasher.
- The drain hose must not be shortened. The hose can be extended using a connection piece to attach a further length of hose. The drainage length must not be longer than 4 m.
- The drainage system must be able to accommodate a minimum drainage flow of 16 l/min.

⚠ Damage caused by incorrect routing.
Make sure that there are no kinks in the hose, and that it is not squashed or stretched.
Make sure that there are no kinks in the drain hose and that it is not squashed or stretched.

Please refer to the installation plan provided.

Model	PFD 402, PFD 405	PFD 404, PFD 407
Height with machine lid Height without machine lid	835 mm (adjustable + 60 mm) 820 mm (adjustable + 60 mm)	835 mm (adjustable + 60 mm) 820 mm (adjustable + 60 mm)
Width	598 mm	598 mm
Depth Depth with door open	580 mm 1180 mm	598 mm 1200 mm
Weight (net)	ca. 70 kg	ca. 70 kg
Voltage, rated load, fuse rating	See data plate	See data plate
Power supply cord	Approx. 1.7 m	Approx. 1.7 m
Water connection water temperature: Cold water/Steam condenser (optional) Hot water	 Max. 20 °C Max. 65 °C	 Max. 20 °C Max. 65 °C
Static water pressure	1000 kPa overpressure	1000 kPa overpressure
Minimum water connection flow pressure: Cold water/Steam condenser (optional) Hot water	 100 kPa overpressure 40 kPa overpressure	 100 kPa overpressure 40 kPa overpressure
Recommended water connection flow pressure: Cold water/Hot water Steam condenser (optional – connection via cold water)	 ≥ 200 kPa overpressure ≥ 200 kPa overpressure	 ≥ 200 kPa overpressure ≥ 200 kPa overpressure
Water inlet hose	Approx. 1.7 m	Approx. 1.7 m
Drain hose	Approx. 1.5 m	Approx. 1.5 m
Delivery head	Min. 0.3 m, max. 1.0 m	Min. 0.3 m, max. 1.0 m
Drainage length	Max. 4.0 m	Max. 4.0 m
Operating conditions: Ambient temperature Maximum relative humidity Linear decrease to Minimum relative humidity	 5 °C to 40 °C 80 % for temperatures up to 31 °C 50 % for temperatures up to 40 °C 10 %	 5 °C to 40 °C 80 % for temperatures up to 31 °C 50 % for temperatures up to 40 °C 10 %
Storage and transportation conditions: Ambient temperature Relative humidity Air pressure	 -20 °C to 60 °C 10 % to 85 % 500 hPa to 1060 hPa	 -20 °C to 60 °C 10 % to 85 % 500 hPa to 1060 hPa
Altitude above sea level (according to IEC/EN 60335)	Up to 2000 m*	Up to 2000 m*
Protection category (according to IEC 60529)	IP21	IP21
Noise emission values Sound power in LwA Sound pressure in LpA	Built-under machine with wooden beam in front of plinth on Short programme 59 dB (A) 47 dB (A)	Built-under machine with wooden beam in front of plinth on Short programme 57 dB (A) 45 dB (A)
Wi-Fi standard	802.11 b/g/n	
Wi-Fi frequency band	2.400-2.483,5 MHz	
Maximum Wi-Fi transmission power	< 100 mW	
Test certificates awarded	VDE, EMC radio and television suppressed	
CE mark	Machinery Directive 2006/42/EC (valid until 19.01.2027) Machinery Regulation (EU) 2023/1230 (effective as of 20.01.2027)	
Manufacturer address	Miele & Cie. KG, Carl-Miele-Straße 29, 33332 Gütersloh, Germany	

* If installed above 2000 m, the boiling point of the wash water will be lower. For this reason, the programme parameters may have to be adjusted.

Miele Australia Pty. Ltd.
ACN 005 635 398
ABN 96 005 635 398
Melbourne:
Level 4, 141 Camberwell Road
Hawthorn East, VIC 3123
Telephone: 1300 731 411
professional.service@miele.com.au

www.miele-professional.com.au
professional.sales@miele.com.au

Miele New Zealand Limited
IRD 98 463 631
8 College Hill
Freemans Bay
Auckland 1011
New Zealand
Telephone: 0800 4 MIELE
(0800 464 353)
www.miele-professional.com.au
professional.sales@miele.com.au

Miele Global Headquarters: Miele & Cie. KG
Carl-Miele-Straße 29, 33332 Gütersloh, Germany

Alteration rights reserved / Publication date: 2026-08-25 M.-Nr. 12 277 612 / 00

CE