Miele

Operating instructions



Cordless vacuum cleaner

en-GB

HS19

M.-Nr. 12 421 610

Contents

Warning and Safety instructions 4
Safety instructions and warnings for AP01/AP02/AP03 battery, LG01/LG02 charger and LS03 battery charger cradle (optional accessory, see “Optional accessories”) 9

Guide to the appliance 16

Caring for the environment 18
Installation and connection 20
Assembling the vacuum cleaner 20
Using the PowerUnit solo 20
Connecting the Comfort handle 20
Connecting the PowerUnit and the suction tube 21
Inserting the battery 22
Connecting the Electrobrush 22
General battery information 23
Charging the battery (without wall mounting) 23
Charging the battery (with wall mounting) 24
Battery charging state indicator (while charging) 26
Battery charging state indicator (while in use) 27

Using the supplied accessories 28
Multi Floor XXL Electrobrush 28

Use 29
Switching on and off 29
Selecting the suction power level 29
Self-standing function for short pauses in vacuuming 29

Maintenance 30
Purchasing accessories 30
Filter system 31
Activating the ComfortClean function 31
Emptying the dust container 31
Cleaning the pre-filter and fine dust filter 33
Cleaning the dust container 35
Cleaning the Electrobrush 35
Replacing the rechargeable battery 36

Error messages 37

Problem solving guide 38

Service 40
Contact in case of malfunction 40

Contents

Warranty 40

Cleaning and care 40

Optional accessories 41
Purchasing accessories 41

Electrical connection for the UK 43

Warning and Safety instructions

This vacuum cleaner conforms to current safety requirements. Inappropriate use can lead to personal injury and damage to property.

Please read the operating instructions before using the vacuum cleaner for the first time. They contain important information on the safety, use and maintenance of the vacuum cleaner. This will prevent both personal injury and damage to the appliance.

In accordance with standard IEC 60335-1, Miele expressly and strongly advises that you read and follow the instructions in the “Installation and connection” section as well as the safety instructions and warnings.
Miele cannot be held liable for injury or damage caused by non-compliance with these instructions.

Keep these operating instructions in a safe place and pass them on to any future owner.

Always disconnect the vacuum cleaner from the power supply when you have finished using it, before changing any accessories, as well as for maintenance work, cleaning and troubleshooting. Use the On/Off switch on the Comfort handle to do this.

Correct application

▶ This vacuum cleaner is intended for cleaning flooring in domestic households and similar residential environments. This vacuum cleaner is not suitable for use on construction sites.

▶ This vacuum cleaner is not intended for outdoor use.

▶ This vacuum cleaner can be used for all normal cleaning of carpets, rugs and robust hard flooring.

▶ This vacuum cleaner is intended for use at altitudes of up to 4000 m above sea level.

▶ The vacuum cleaner must only be used to vacuum dry floor surfaces. Do not vacuum people or animals. Any other types of use, modifications or alterations are not permitted.

▶ The vacuum cleaner can only be used by people (including children) with reduced physical, sensory, or mental capabilities, or lack of experience or knowledge, if they are supervised whilst using it or have been shown how to use it in a safe way and understand and recognise the consequences of incorrect operation.

Safety with children

▶ Children under 8 years of age must be kept away from the vacuum cleaner unless they are constantly supervised.

▶ Children aged 8 and older may only use the vacuum cleaner without supervision if they have been shown how to use it in a safe manner. Children must be able to understand and recognise the possible dangers caused by incorrect operation.

▶ Children must not be allowed to clean or maintain the vacuum cleaner unsupervised.

▶ Please supervise children in the vicinity of the vacuum cleaner and do not let them play with it.

▶ Danger of suffocation. Packaging, e.g. plastic wrappings, must be kept out of the reach of babies and children. Whilst playing, children could become entangled in packaging or pull it over their head and suffocate.

Technical safety

▶ The vacuum cleaner operates at 25.2 V.
It is classified as a class II ⧈ appliance and is designed as a class III appliance in its construction.
This appliance is supplied by a safety extra-low voltage (SELV) power source where the voltage is low enough to protect users from the risk of electrical shock. A Class II ⧈ charger is used for supplying power to charge the vacuum cleaner.

▶ Compare the connection data on the data plate of the charger (voltage and frequency) with that of the mains electricity supply. This data must match exactly. Without modifications, the charger is suitable for 50 Hz and 60 Hz.

▶ The mains electrical plug must be fitted with an appropriate fuse.

▶ Check both the vacuum cleaner and all accessories supplied with it for any visible signs of damage before use. Do not use a damaged vacuum cleaner or damaged accessory.

▶ While the vacuum cleaner is under warranty, repairs should only be undertaken by a Miele authorised service technician. Otherwise the warranty will be invalidated.

▶ The Miele Multi Floor XXL Electrobrush (included as standard) and the Miele Electro Compact handheld brush (optional accessory) are additional motor-driven devices designed specially for this Miele vacuum cleaner. For safety reasons, the vacuum cleaner must not be used with a different Miele Electrobrush/handheld brush or an Electrobrush/handheld brush produced by another manufacturer.

▶ Before and during use, make sure that no coarse dirt or debris is/gets trapped in the bottom of the Multi Floor XXL Electrobrush (included as standard) or in the bottom of the Electro Compact handheld brush (optional accessory).

▶ Store the vacuum cleaner and all accessories at an ambient temperature between 0 °C and 45 °C.

▶ Repairs should only be carried out by a Miele authorised service technician. Repairs and other work by unqualified persons can cause considerable danger to users.

Correct use

▶ Do not use the vacuum cleaner without the dust container, pre-filter and fine dust filter fitted.

▶ Do not vacuum up anything which has been burning or is still glowing e.g. cigarettes, ashes or coal, whether glowing or apparently extinguished.

▶ Do not use the vacuum cleaner to vacuum up any water, liquid or damp dirt. Wait until any freshly cleaned or shampooed rugs or carpets are completely dry before attempting to vacuum.

▶ Do not use the vacuum cleaner to vacuum toner dust. Toner, such as that used in printers and photocopiers, can conduct electricity.

▶ Do not vacuum up any inflammable or combustible liquids or gases and do not vacuum in areas where such substances are stored.

▶ Never touch the roller brush of the Multi Floor XXL Electrobrush (included as standard) or the Electro Compact handheld brush (optional accessory) while it is rotating.

▶ Do not use the Multi Floor XXL Electrobrush (included as standard) or the Electro Compact handheld brush (optional accessory) at head height.

▶ Do not vacuum at head height and do not let the suction get anywhere near a person's head.

Safety instructions and warnings for AP01/AP02/AP03 battery, LG01/LG02 charger and LS03 battery charger cradle (optional accessory, see “Optional accessories”)

Safety with children

▶ People (including children) with reduced physical, sensory or mental capabilities, or lack of experience or knowledge, who are unable to use the LG01/LG02 charger or LS03 charger cradle safely may only use this vacuum cleaner if they are supervised whilst using it or have been shown how to use it in a safe way and understand and recognise the consequences of incorrect operation.

▶ Keep the AP01/AP02/AP03 battery out of the reach of children.

▶ Children must be kept away from the LG01/LG02 charger and the LS03 charger cradle unless they are constantly supervised.

Technical safety

▶ The AP01/AP02/AP03 battery, the LG01/LG02 charger and the LS03 charger cradle are designed for use with the Miele HS19 vacuum cleaner. For safety reasons, the vacuum cleaner must not be used with a battery, charger or charger cradle produced by another manufacturer.

▶ Only the LG01/**xx** or LG02/**xx** charger included or the LS03/**xx** charger cradle included or purchased as an optional accessory should be used to charge the AP01/AP02/AP03 battery.
xx stands for 01, 02, 03, 04, 05, 06, 07 or 08; these numbers identify the version of your LG01/LG02 charger and your LS03 charger cradle.

XX	LG01/LS03	LG02
01	AT, BE, BG, CH, CL, CZ, DE, DK, EE, ES, FI, FR, GR, HR, HU, IT, KZ, LT, LU, LV, NL, NO, PL, PT, RO, RS, RU, SE, SI, SK, TR, UA, ZA	AT, BE, BG, CH, CL, CZ, DE, DK, EE, ES, FI, FR, GR, HR, HU, IT, KZ, LT, LU, LV, NL, NO, PL, PT, RO, RS, RU, SE, SI, SK, TR, UA, ZA
02	AE, HK, IE, MY, SG, UK	AE, HK, IE, MY, SG
03	BR, CA, MX, US	BR, CA, JP, MX, US
04	AU, NZ	AU, NZ
05	CN	CN
06	KR	KR
07	JP	UK
08	IN	

▶ If you are using a mains plug adapter, make sure that it is approved for continuous operation.

▶ Temporary or permanent operation on an autonomous power supply system or a power supply system that is not synchronised with the mains power supply (e.g. island networks, back-up systems) is possible. A prerequisite for operation is that the power supply system complies with the specifications of EN 50160 or an equivalent standard.
The function and operation of the protective measures provided in the domestic electrical installation and in this Miele product must also be maintained in isolated operation or in operation that is not synchronised with the mains power supply, or these measures must be replaced by equivalent measures in the installation. As described, for example, in the current version of BS OHSAS 18001–2 ISO 45001.

▶ Charge and use the AP01/AP02/AP03 battery at an ambient temperature between 0 °C and 45 °C.
Using the AP01/AP02/AP03 battery outside of this ambient temperature range will limit its performance.

▶ Stop using the AP01/AP02/AP03 battery immediately if you notice an unusual smell from it, if liquid is leaking from it, if it is significantly overheating or if it is discoloured or deformed. Dispose of the AP01/AP02/AP03 battery immediately (see safety note “Disposing of the AP01/AP02/AP03 battery” at the end of the following section “Correct use” as well as “Caring for the environment” – “Disposing of old batteries”).

▶ Batteries will deplete over time. They can then leak corrosive fluids. Avoid contact with the eyes and skin. In the event of contact, rinse thoroughly with water and seek medical advice.

▶ The AP01/AP02/AP03 lithium-ion battery is subject to the dangerous goods legislation. The user is permitted to transport the AP01/AP02/AP03 battery by road without having to observe any further requirements. Please contact the Miele Customer Service Department before sending the AP01/AP02/AP03 battery. Only send AP01/AP02/AP03 batteries that are undamaged and have been fully run down. Insulate the metal contacts with adhesive tape to prevent short circuits. Pack the AP01/AP02/AP03 battery in such a way that it is not able to move around inside the packaging.

Correct use

▶ Do not drop or throw the AP01/AP02/AP03 battery. For safety reasons, do not continue to use an AP01/AP02/AP03 battery which has been damaged.

▶ Keep the AP01/AP02/AP03 battery away from naked flames or other heat sources. Do not heat the AP01/AP02/AP03 battery. Do not expose the rechargeable battery to direct sunlight.

▶ Do not dismantle the AP01/AP02/AP03 battery.

▶ Do not cause a short circuit by bridging the contacts of the AP01/AP02/AP03 battery, either unintentionally or deliberately.

▶ Do not allow the AP01/AP02/AP03 battery to come into contact with liquids.

▶ Disposing of the AP01/AP02/AP03 battery: remove the AP01/AP02/AP03 battery from the vacuum cleaner. Insulate the metal contacts with adhesive tape to prevent short circuits. Dispose of the AP01/AP02/AP03 battery in a municipal recycling facility. Do not dispose of the AP01/AP02/AP03 battery with your household waste.

Cleaning

▶ Do not immerse the vacuum cleaner or any accessories supplied with it in water.

▶ The Multi Floor XXL Electrobrush (included as standard), the Electro Compact handheld brush (optional accessory), the PowerUnit, the suction tube and the Comfort handle all contain electrical wires. The plug connectors must not come into contact with water. Danger of electric shock. They should only be cleaned with a dry cloth.

▶ Clean the vacuum cleaner and accessories only with a dry or slightly damp cloth when disconnected from the power supply. Exception:

- Dust container: empty the dust container and remove the pre-filter. Clean the dust container using water and mild washing-up liquid only. Then dry the dust container carefully. Replace the pre-filter in the dust container.

Accessories and spare parts

▶ Only use genuine accessories with the “ORIGINAL Miele” logo on the packaging. The manufacturer cannot otherwise guarantee the safety of the product.

▶ Miele can only guarantee the safety of the appliance when genuine Miele replacement parts are used. Faulty components must only be replaced with genuine Miele replacement parts.

Transport

▶ The packaging material protects the vacuum cleaner from transport damage. We recommend you keep the packaging for transport purposes.

Guide to the appliance

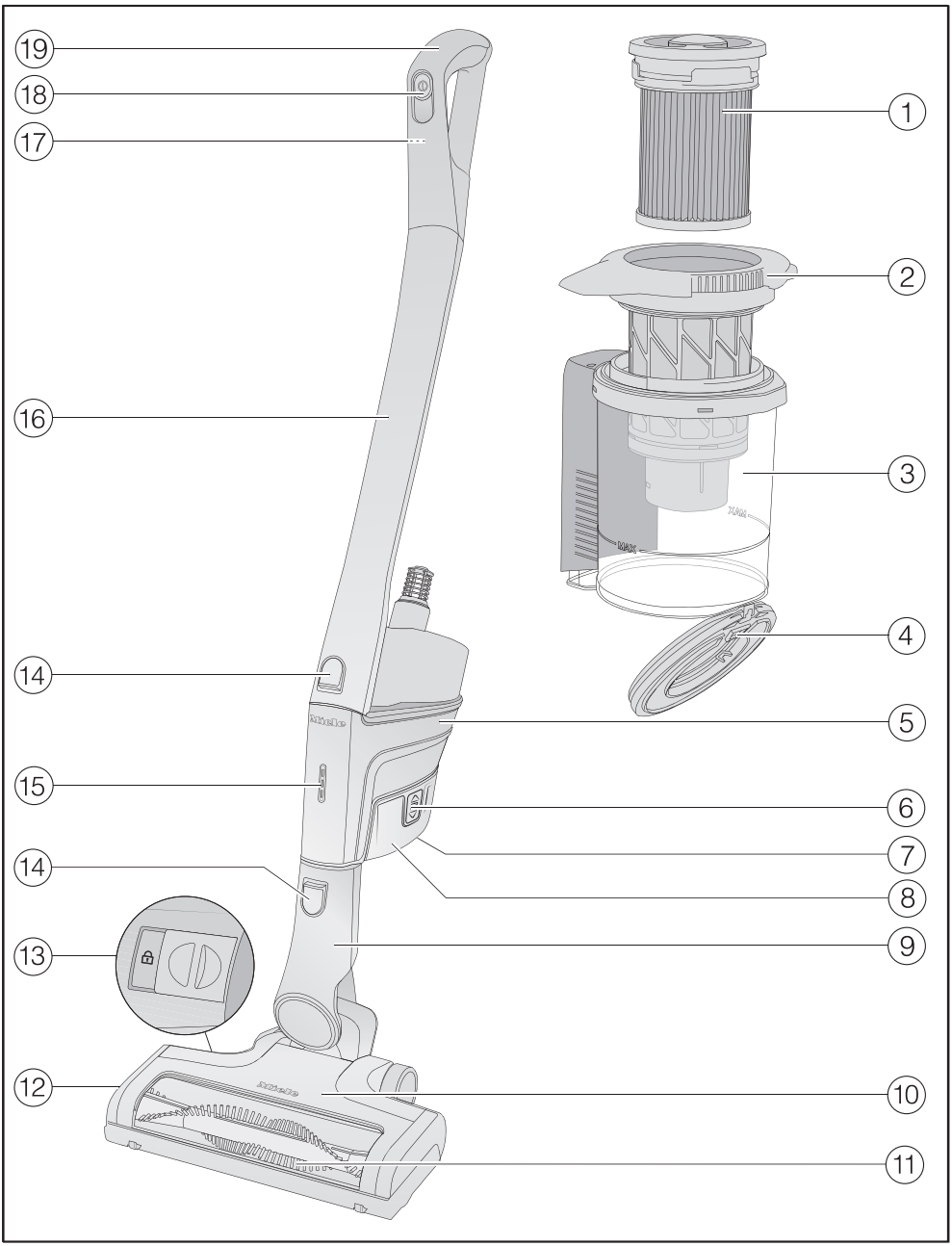

① Fine dust filter (HX FSF-2)

② Pre-filter

③ Dust container

④ Dust container flap

⑤ PowerUnit with a connection at the bottom for the battery, a connector at the bottom for the suction tube and Electrobrush, and a connector at the top for the suction tube and Comfort handle

⑥ Release buttons for battery (on both sides of the battery)

⑦ Charging socket (at the bottom of the battery)

⑧ AP01/AP02/AP03 lithium-ion battery (HX LA)

⑨ Electrobrush connector

⑩ Multi Floor XXL Electrobrush

⑪ Removable roller brush

⑫ Flap

⑬ Release catch for opening the Electrobrush

⑭ Release buttons

⑮ Battery charging state indicator

⑯ Suction tube

⑰ Release button for Comfort handle (on the back)

⑱ On/Off switch with suction power selector

⑲ Comfort handle

Caring for the environment

Disposing of the packaging material

The packaging material is used for handling and protects the appliance from transport damage. The packaging material used is selected from materials which are environmentally friendly for disposal and can generally be recycled.

Recycling the packaging material reduces the use of raw materials. Use material-specific collection points for valuable materials and take advantage of return options.

We recommend you keep the packaging material for transport purposes.

Disposing of your old appliance

Before disposing of your old appliance, remove the fine dust filter and dispose of it with your household waste.

Electrical and electronic appliances contain many valuable materials. They also contain certain materials, compounds and components which were essential for their correct functioning and safety. These could be hazardous to human health and to the environment if disposed of with household waste or if handled incorrectly. Please do not, therefore, dispose of your old appliance with household waste.



Instead, please make use of officially designated collection and disposal points to dispose of and recycle electrical and electronic appliances in your local community, with your dealer or with Miele, free of charge. By law, you are solely responsible for deleting any personal data from the old appliance prior to disposal. You are legally obliged to remove any old batteries which are not securely enclosed by the appliance and to remove any lamps without destroying them, where this is possible. These must be taken to a suitable collection point where they can be handed in free of charge. Please ensure that your old appliance poses no risk to children while being stored for disposal.

Disposing of old batteries

In many cases, electrical and electronic appliances contain batteries which must not be disposed of with household waste after use. You are legally obliged to remove any old batteries which are not securely enclosed by the appliance and take them to a suitable collection point (e.g. retailer) where they can be handed in free of charge. Insulate the metal contacts with adhesive tape to prevent short circuits. Batteries may contain substances which can be hazardous to human health and the environment.

The labelling on the battery will provide further information. For example, batteries containing lithium are marked “Li-ion”. The bin symbol with a cross through it means that the batteries must not be disposed of in household waste. We are also required to inform you that a bin with a cross through it which also has one or more chemical symbols on it indicates that the battery contains lead (Pb), cadmium (Cd) and/or mercury (Hg).



Old batteries contain valuable raw materials which can be recycled. Disposing of batteries separately makes them easier to handle and recycle.

Installation and connection

Assembling the vacuum cleaner

You can assemble the vacuum cleaner in 2 different ways.

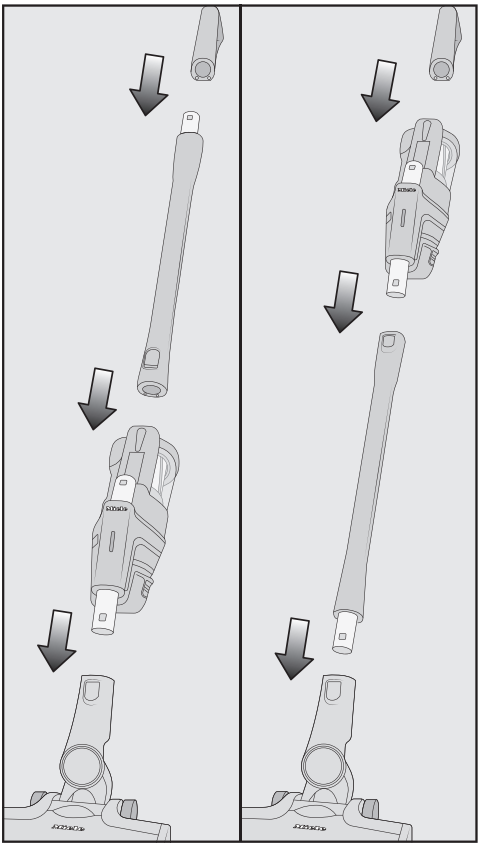

■ You can place the suction tube either above or below the PowerUnit.

Take care to assemble the vacuum cleaner exactly as shown in the diagram.

The advantages of placing the **PowerUnit at the bottom** of the vacuum cleaner are as follows:
- Secure self-standing function possible (see “Use – Self-standing function for short pauses in vacuuming”)
- Ergonomic (reduced strain on the wrist)
- Convenient cleaning of large surfaces

The advantages of placing the **PowerUnit at the top** of the vacuum cleaner are as follows:
– Convenient cleaning underneath furniture
– PowerUnit can be removed quickly

Using the PowerUnit solo

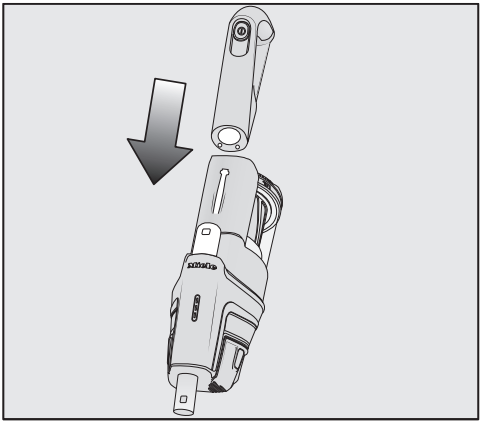

The PowerUnit can be used on its own without the suction tube and electrobrush as a quick way of vacuuming up crumbs and fluff in specific areas.

Tip: This configuration is particularly suitable when using the three-piece accessory set (see “Using the supplied accessories”).

Connecting the Comfort handle

Depending on how you decide to configure your vacuum cleaner, you can connect the Comfort handle to either the suction tube or the PowerUnit.

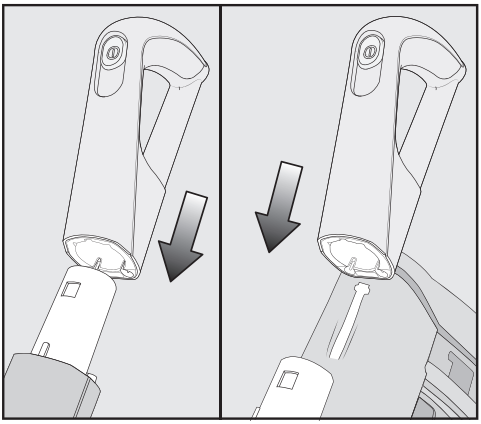

- Push the Comfort handle down onto the suction tube connector from above until it audibly clicks into place (left image detail).
- Slide the Comfort handle along the guide line on the dust container handle and down onto the PowerUnit connector from above until it audibly clicks into place (right image detail).
- Switch off the vacuum cleaner using the On/Off switch on the front of the Comfort handle if you want to separate the sections.

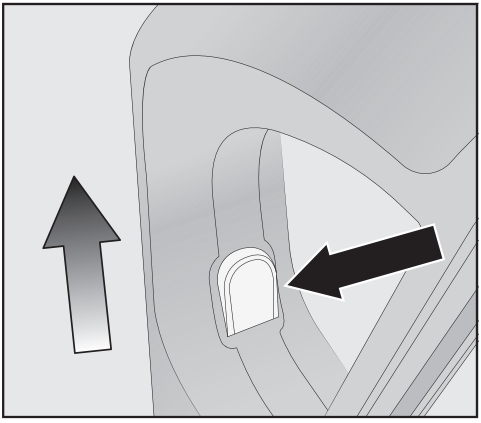

- Press the release button and remove the Comfort handle by pulling it upwards.

Connecting the PowerUnit and the suction tube

Depending on how you decide to configure your vacuum cleaner, the suction tube is located either above or below the PowerUnit.

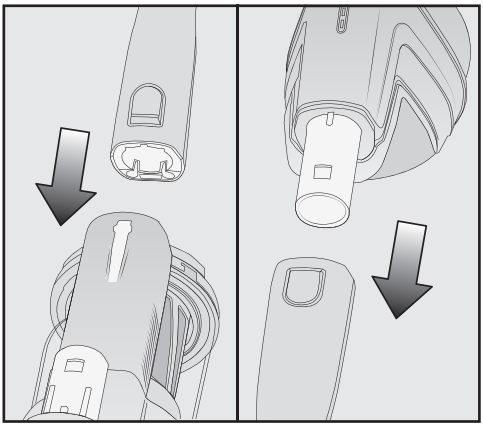

- Slide the suction tube along the guide line on the dust container handle and down onto the PowerUnit connector from above until it audibly clicks into place (left image detail).
- Push the PowerUnit connector into the suction tube from above until it audibly clicks into place (right image detail).

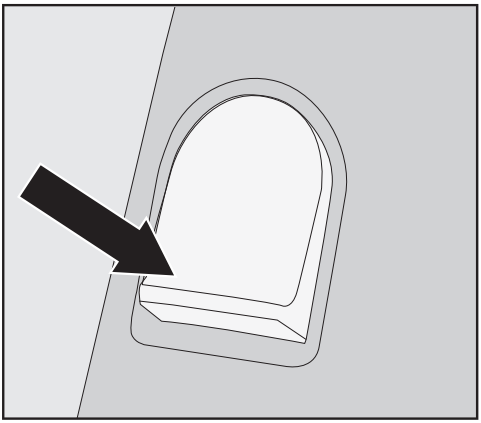

■ Press the release catch to separate the individual sections from each other.

Inserting the battery

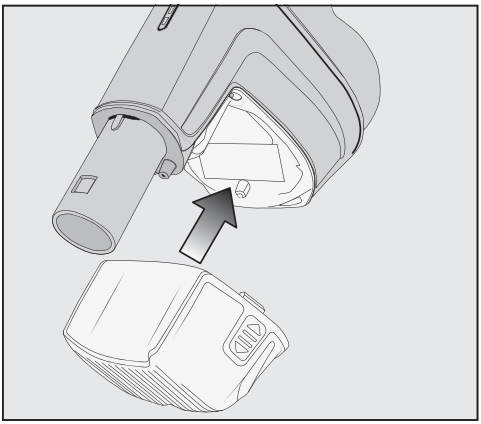

■ Push the battery along the guide lines until it audibly clicks into place in the PowerUnit.

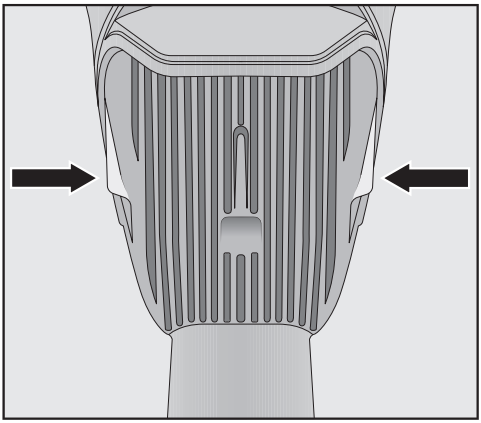

■ If you want to separate the sections again, press both release catches at the side of the battery to remove the battery.

Connecting the Electrobrush

Depending on how you decide to configure your vacuum cleaner, you can connect either the PowerUnit connector or the suction tube connector to the Electrobrush.

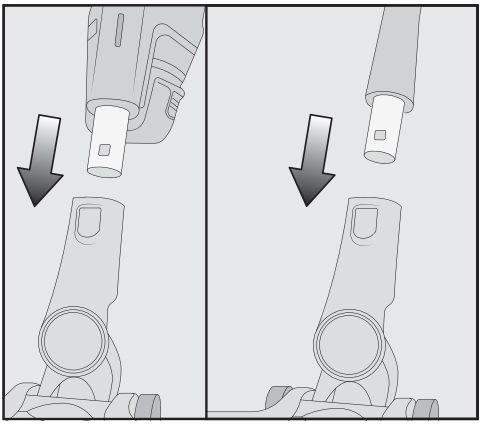

■ Push the connector into the Electrobrush from above until it audibly clicks into place.

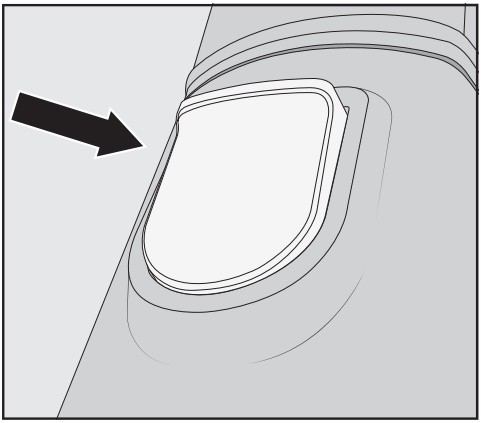

- To separate the individual sections from each other, press the release catch on the Electrobrush and pull the connector out of the Electrobrush.

General battery information

The rechargeable battery is supplied not fully charged.
Charge the battery completely before using it for the first time. Allow approximately 4 hours for this.
To activate the battery, it is essential to place it in the PowerUnit when charging it for the first time.

Once the battery is fully charged, the battery charging state indicator on the PowerUnit switches off to conserve energy.

The maximum charging capacity is only achieved once the battery has been charged and run down five times.

A full charge provides enough power for 17 minutes if the vacuum cleaner is used at the maximum power level in its fully assembled state.
However, if you use the PowerUnit solo and select the minimum power level, you can vacuum for up to 60 minutes at a time.

Charging the battery (without wall mounting)

You can store the vacuum cleaner upright and charge the battery directly.

Before charging the battery for the first time, you must read the information in “Installation and connection – General battery information”.

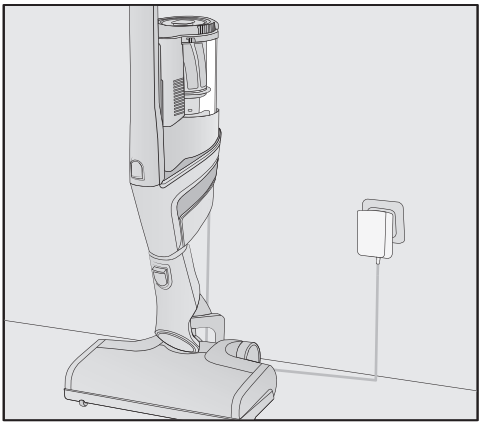

- Connect the PowerUnit to the Electrobrush to provide a secure base for the vacuum cleaner.
- Swing the vacuum cleaner forwards until the Electrobrush connector audibly clicks into place.
- Plug the supplied charging cable into the charging socket on the bottom of the battery.
- Plug the charger into a power socket.

The charging process will start.

You can read more about this in “Battery charging state indicator (while charging)”.

Charging the battery (with wall mounting)

You can store the vacuum cleaner in the included wall bracket and charge the battery at the same time.

Before charging the battery for the first time, you must read the information in “Installation and connection” – “General battery information”.

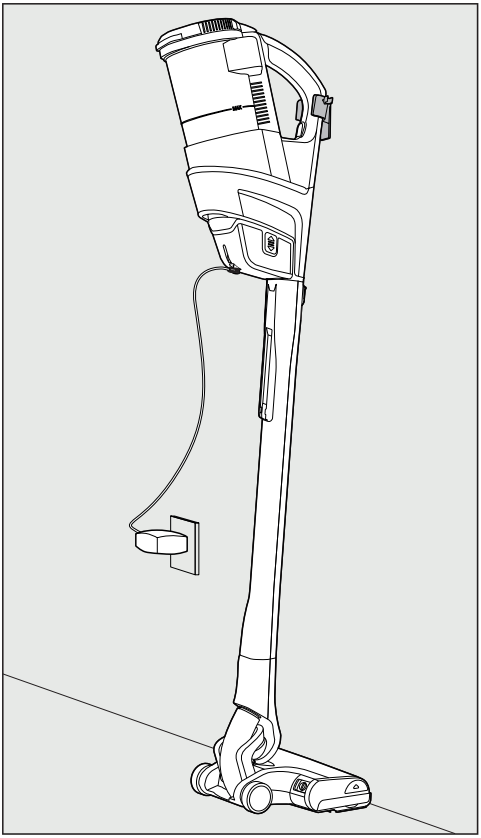

You will need a suitable location near a free power socket for mounting the appliance on the wall.

You can screw or stick the included wall bracket to the wall.

Screwing the wall bracket to the wall

The included screw bag contains 2 plugs and 2 T20 TORX screws.
You will also need a battery-operated screwdriver or a drill (with a drilling diameter of 6 mm).

Select a distance of 104 cm between the bottom edge of the wall bracket and the floor.

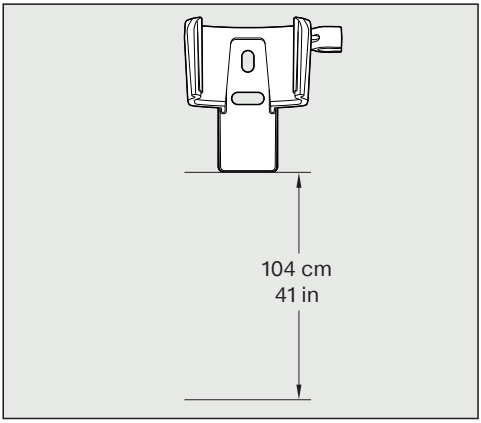

Be careful not to damage any cables laid in the wall.

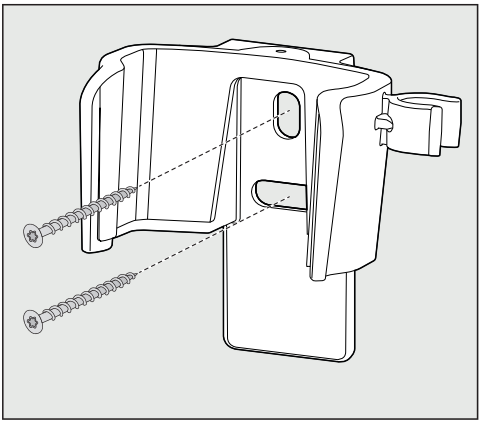

■ Attach the wall bracket to the wall.

Sticking the wall bracket to the wall

The bag of accessories included with the product contains an adhesive strip.

Select a distance of 104 cm between the bottom edge of the wall bracket and the floor.

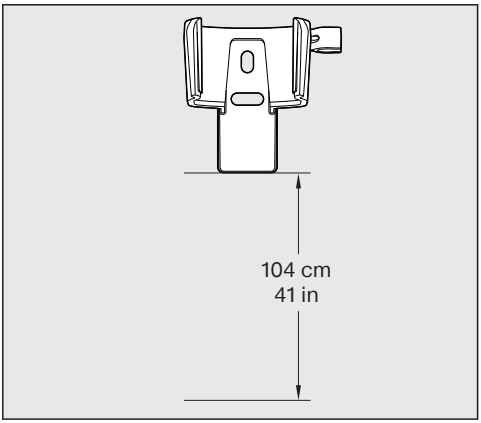

■ Clean the surface of the wall with a soft, dust-free cloth.

■ Remove one of the two protective films from the adhesive strip.

■ With the tab at the bottom, carefully stick the adhesive strip to the back of the wall bracket.

■ Press down hard and evenly on the adhesive strip for at least 5 seconds.

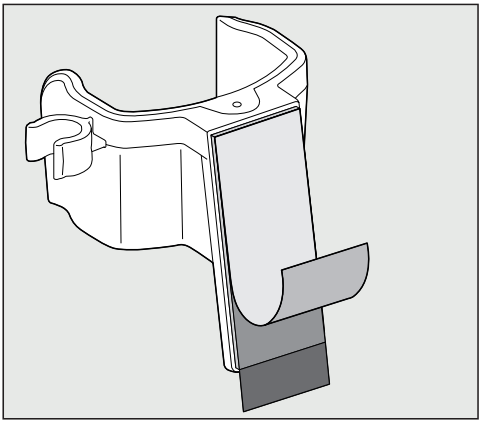

■ Pull the second protective film up and off the adhesive strip and stick the wall bracket to the wall.

■ Press down hard and evenly on the wall bracket for at least 5 seconds.

■ To remove the wall bracket from the wall, pull the black tab on the adhesive strip down slowly parallel to the wall.

Charging the battery in the wall bracket

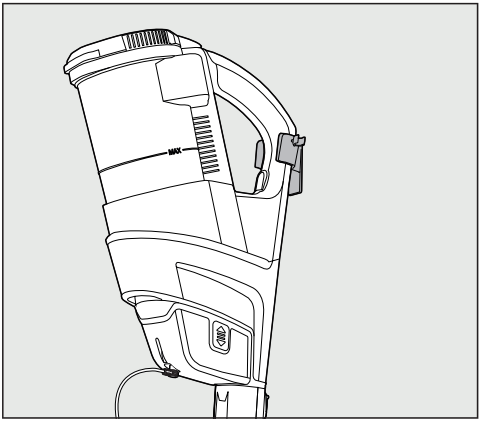

- Slide the Comfort handle of the fully assembled vacuum cleaner into the wall bracket.
- Plug the charging plug of the supplied charging cable into the charging socket on the bottom of the battery.
- Plug the charger into the power socket.

The charging process will start.

When you want to remove the vacuum cleaner, you can store the charging plug in the cable holder on the wall bracket.

- Pull the charging plug out of the charging socket on the battery.

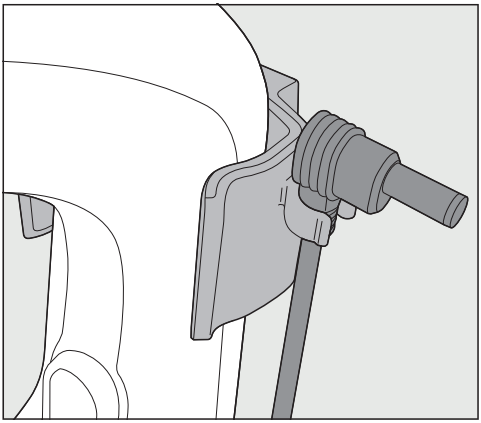

- Plug the charging plug into the cable holder on the wall bracket.

Battery charging state indicator (while charging)

The battery charging state is displayed on the PowerUnit.

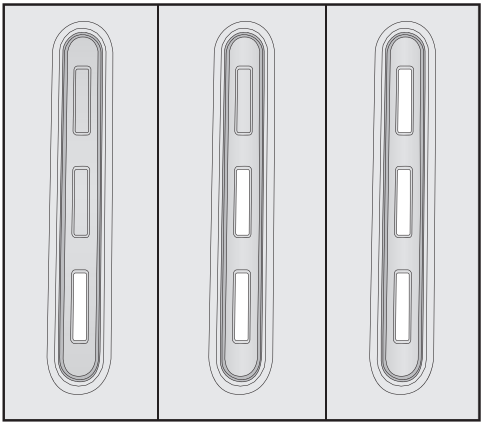

Charging capacity	Display
Approx. 0–34 %	Bottom light flashes slowly
Approx. 35–69 %	Bottom light is lit up; middle light flashes slowly
Approx. 70–90 %	Bottom and middle lights are lit up; top light flashes slowly
Approx. 91–99 %	Bottom, middle and top lights are lit up
100 %	Switches off

Once the battery is fully charged, the battery charging state indicator switches off to conserve energy.

If the battery has not been used for a long time and has run down, it will go into safe mode. As a result, the battery charging state indicator will only respond after approximately 30–60 minutes when charging in the PowerUnit.

Battery charging state indicator (while in use)

The battery charging state is displayed on the PowerUnit.

Charging capacity	Display
Approx. 100–70 %	Top, middle and bottom lights are lit up
Approx. 69–35 %	Middle and bottom lights are lit up
Approx. 34–15 %	Bottom light is lit up
Approx. 14–0 %	Bottom light flashes slowly

We recommend allowing the battery to run down completely before recharging it. In this way, you will benefit from the battery's full capacity.

Using the supplied accessories

Miele offers a range of suitable accessories for many special applications (see “Optional accessories”).

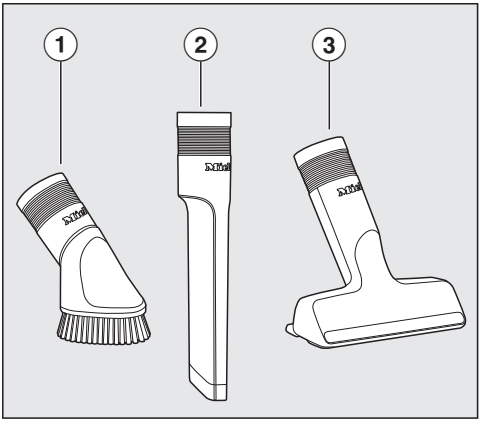

① **Dusting brush**
Accessory for vacuuming skirting boards, carved furniture or ornaments.
The head can be swivelled to adjust the angle.

② **Crevice nozzle**
Accessory for cleaning in folds, crevices or corners.

③ **Upholstery nozzle XL**
Accessory for cleaning upholstery, mattresses and cushions.

You can carry around 2 accessories from the three-piece accessory set while you vacuum.

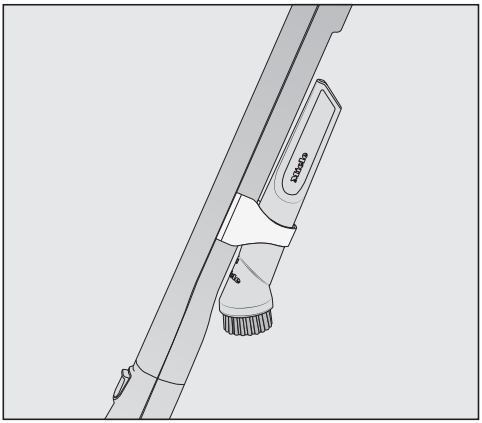

Multi Floor XXL Electrobrush

Follow the flooring manufacturer’s cleaning and care instructions.

⚠ Damage caused by trapped material.
Risk of the flooring getting scratched.
Make sure that there is no coarse dirt or debris trapped in the bottom of the Electrobrush, e.g. shards or stones.

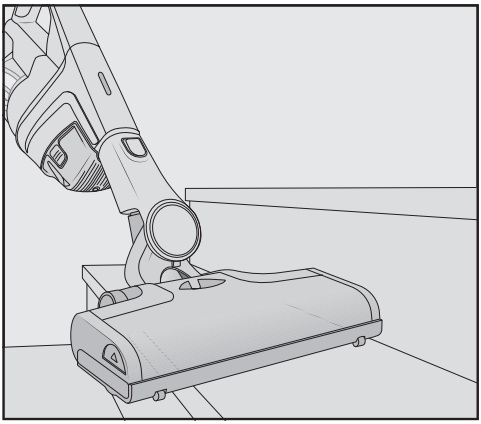

The Electrobrush can be used for daily cleaning of carpets, rugs and hard floors.

Tip: The suction tube is not a convenient option for cleaning carpeted stairs.

Tip: If you ever need to vacuum up substantial amounts of coarse dirt or debris, use the PowerUnit solo (see “Installation and connection – Using the PowerUnit solo”).

Use

Switching on and off

- If you have charged the battery in the wall bracket, take the vacuum cleaner out of the wall bracket.
- If you have charged the battery directly, unplug the charger from the charging socket on the bottom of the battery.

For the best possible cleaning results, always activate the ComfortClean function before switching on the vacuum cleaner (see “Maintenance – Activating the ComfortClean function”).

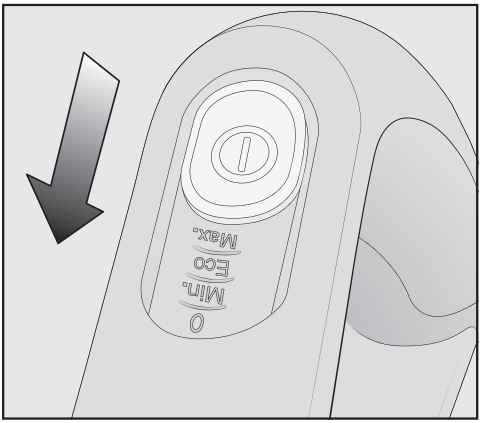

- Press the On/Off switch on the Comfort handle ⓘ.

Selecting the suction power level

The suction power level can be adjusted for the specific situation. Reducing the suction power reduces the amount of effort required to manoeuvre the Electrobrush.

There are 3 power levels to choose from on the Comfort handle:

Min.	Lowest power level for light soiling
Eco	Medium power level for normal soiling
Max.	Highest power level for heavy soiling

The floor covering detection function is activated at every power level.
The Electrobrush power consumption is automatically set to the optimum level based on the type of flooring – this can lead to a change in the operating noise.

Self-standing function for short pauses in vacuuming

(For safety reasons, this function can only be used when the PowerUnit is fitted at the bottom of the vacuum cleaner)

If you are vacuuming with the PowerUnit fitted at the bottom of the vacuum cleaner, you can easily interrupt operation while the appliance is switched on.

- Swing the vacuum cleaner forwards until the Electrobrush connector audibly clicks into place.

The vacuum cleaner stays securely upright, the Electrobrush switches itself off and the battery is conserved.
If you then unlock the connector on the Electrobrush, the Electrobrush will switch on again.

Maintenance

⚠ Risk of injury caused by rotating roller brush.
You can injure yourself on the rotating roller brush.
Switch the vacuum cleaner off before doing any maintenance work. Use the On/Off switch on the Comfort handle to do this.

We recommend using only genuine Miele accessories bearing the “ORIGINAL Miele” logo on the packaging. Only these will guarantee the optimum suction power of your vacuum cleaner and the best possible cleaning results.

Please note that faults and damage caused by use of accessories which do not bear the “ORIGINAL Miele” logo on the packaging are not covered by the vacuum cleaner warranty.

Purchasing accessories

Original Miele accessories are available from the Miele webshop, the Miele Customer Service Department and from your Miele dealer.

Original Miele accessories are identified by the “ORIGINAL Miele” logo on the packaging.

With 3D4U, Miele also offers free accessories to download for your 3D printer (www.miele.com, Service, 3D4U).

3 D 4 U

Filter system

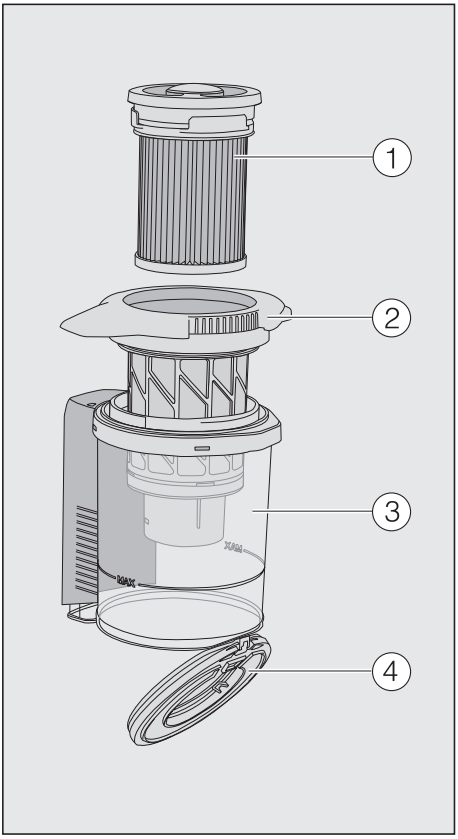

① Fine dust filter (HX FSF-2)

② Pre-filter

③ Dust container

④ Dust container flap

Activating the ComfortClean function

Always run the interim cleaning function for the fine dust filter before emptying the dust container. You should also run it whenever the suction power begins to drop.

This enables the vacuum cleaner to achieve the very best cleaning performance again straight away.

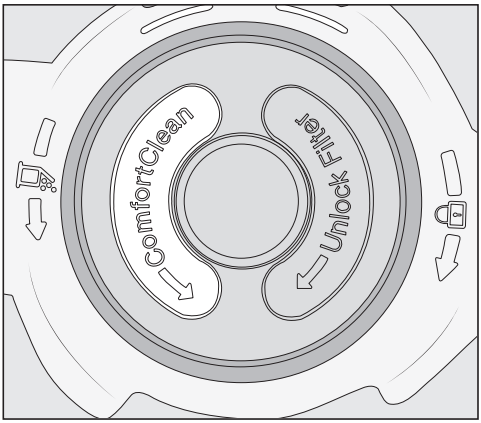

■ The fine dust filter is located in the lid of the dust container. Twist it anticlockwise by 3 180° turns. Use the recesses to help you.

You will hear an operating noise, which is a normal part of how the ComfortClean function works.

Emptying the dust container

Empty the dust container at the latest when the dust has reached the **MAX** marking on the dust container.

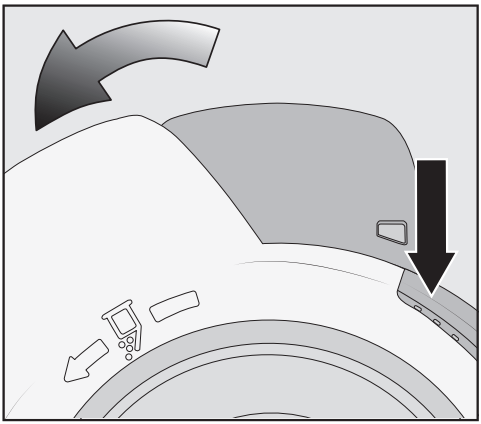

■ Turn the lid of the dust container in the direction of the arrow as far as the first stop. Use the grey gripping surfaces to help you do this.

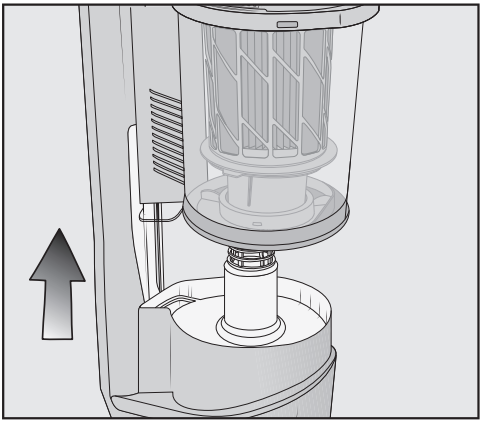

■ Lift the dust container upwards to remove it.

Provided that no prohibited substances are present, the contents of the dust container can be disposed of with normal household waste.

■ Hold the dust container close to the bin to prevent dust from billowing out.

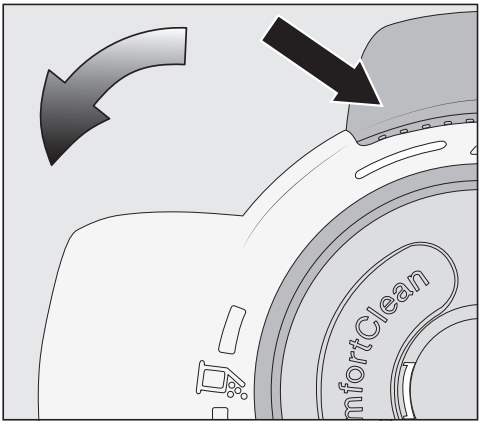

■ Turn the lid of the dust container in the direction of the arrow as far as the next stop. Use the grey gripping surfaces to help you do this.

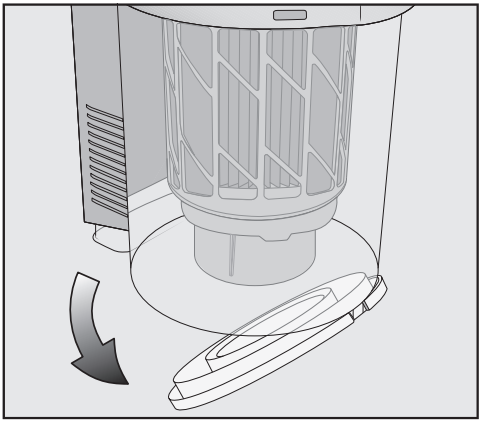

The dust container flap will open and the dust will fall out.

If chunks of dust, hair or coarse debris do not fall out, remove the pre-filter by pulling it upwards (see “Cleaning the pre-filter and fine dust filter” below).

■ Turn the lid of the dust container back to its original position.

■ Close the dust container flap, making sure it clicks into place.

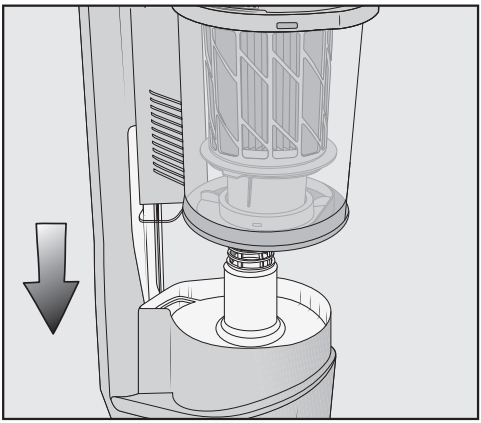

- Slide the dust container handle along the guide line and down onto the PowerUnit connector from above until the dust container audibly clicks into place.

Cleaning the pre-filter and fine dust filter

Clean both filters thoroughly at least once every 3 months.

When cleaning them, it is essential to follow the steps in the order described.

- Remove the dust container.
- Empty the dust container over a bin.

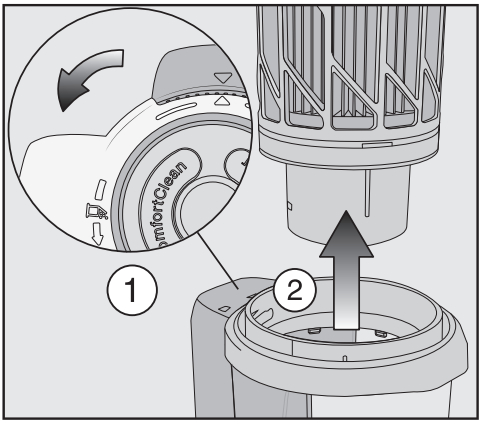

- Turn the lid of the dust container beyond the stop until the arrow tips are aligned at the top ①.
- Remove the pre-filter by pulling it upwards ②.

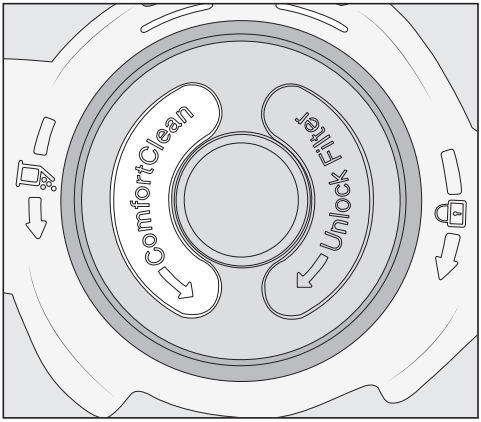

- Twist the fine dust filter anti-clockwise by 10 180° turns. Use the recesses to help you.

You will hear an operating noise, which is a normal part of how the ComfortClean function works.

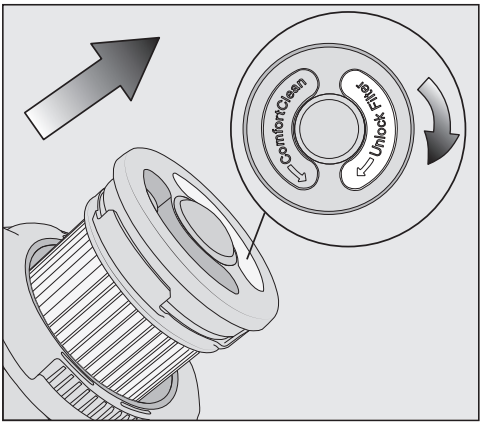

- Twist the fine dust filter clockwise. Use the recesses to help you.
- Remove the fine dust filter.

⚠ Risk of damage caused by incorrect cleaning.
The fine dust filter can become damaged and be less effective as a result.
Do not clean the fine dust filter with water and avoid cleaning the inside. Do not use pointed or sharp-edged objects to clean the filter. Do not brush the fine dust filter.

- Hold the fine dust filter over a bin.
- Empty the fine dust filter by carefully tapping the rubberised lower edge.
- Turn the fine dust filter slightly while you do this to free the dirt from all of the crevices.

⚠ Risk of damage caused by incorrect cleaning.
The pre-filter can become damaged and be less effective as a result.
Do not clean the pre-filter with water. Do not use pointed or sharp-edged objects to clean the filter.

- Clean the pre-filter with the dusting brush supplied or with a dry cloth.
- After cleaning the fine dust filter and pre-filter, reinsert the former into the latter by pressing the round cap on top of the fine dust filter down as far as it will go.

To continue achieving the best possible cleaning results, replace the fine dust filter (HX FSF-2) with a new one after approx. 3 years.

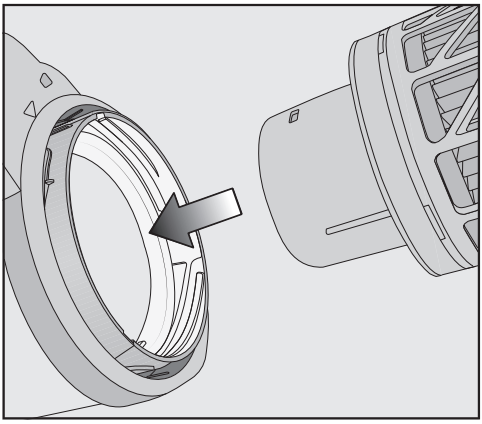

- Reinsert the pre-filter in the dust container.

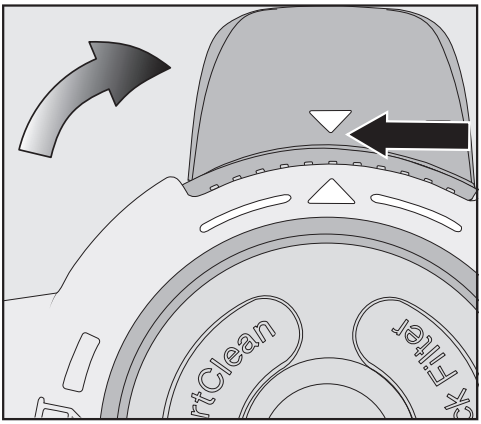

- To do this, line up the guides (arrows) and turn the pre-filter back to its original position.
- Close the dust container flap, making sure it clicks into place.
- Reattach the dust container to the PowerUnit connector.

Cleaning the dust container

Clean the dust container as required.

- Remove the dust container.
- Empty the dust container over a bin and lift the pre-filter upwards to remove it.
- Clean the dust container using water and mild washing-up liquid.
- Dry the dust container thoroughly.
- Reinsert the pre-filter in the dust container and turn the pre-filter back to its original position.
- Reattach the dust container to the PowerUnit connector.

Cleaning the Electrobrush

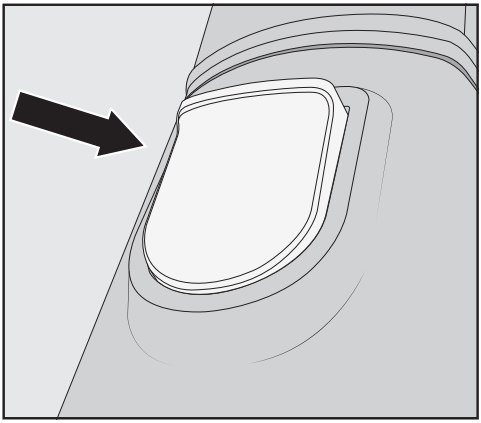

- Disconnect the Electrobrush from the vacuum cleaner.
- Place the Electrobrush upside down on a level, clean surface.

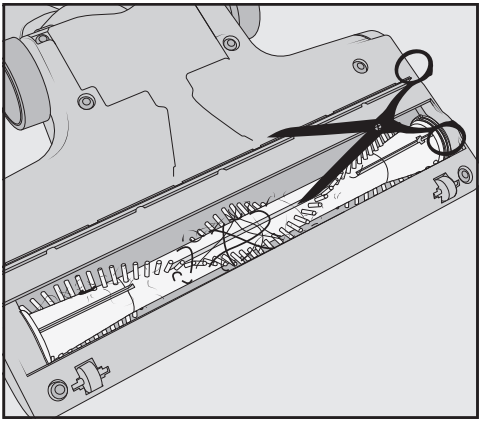

- Cut any threads or hairs that have wound themselves around the roller brush with a pair of scissors. To guide the scissors, move along the guide track on the roller brush.

Then run the vacuum cleaner to vacuum up the cut threads and hairs.

If the small running wheels are very heavily soiled or blocked, you can remove them for easier cleaning. To remove them, use a flat-head screwdriver.

Removing the roller brush from the Electrobrush

You can take the roller brush out of the Electrobrush in order to remove stubborn soiling and clean the inside of the Electrobrush.

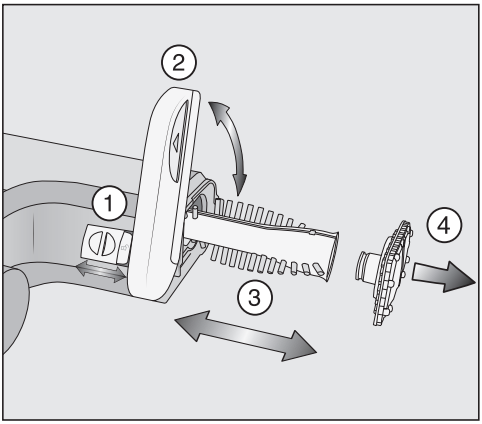

- Unlock the cover on the side of the Electrobrush so that the symbol becomes visible ①.
- Lift the cover up as far as it will go ②.
- Remove the roller brush ③.
- Remove the roller brush handle if you identify heavy soiling there ④.
- Clean the roller brush and the roller brush handle, and remove any stubborn soiling inside the Electrobrush.
- Reassemble the Electrobrush in reverse order.

Replacing the rechargeable battery

An original Miele AP01/AP02/AP03 lithium-ion rechargeable battery (HX LA) is required.

Follow the instructions regarding the handling and disposal of rechargeable batteries found in the following sections: “Warning and safety”, “Caring for the environment” and “Installation and connection - General battery information”).

Error messages

⚠ Risk of injury caused by rotating roller brush.
You can injure yourself on the rotating roller brush.
Switch the vacuum cleaner off before dealing with any problems. Use the On/Off switch on the Comfort handle to do this.

Error messages are displayed with a quick flashing light on the battery charging state indicator on the PowerUnit.

Problem	Cause and remedy
Top indicator is flashing quickly	"Comfort handle not recognised" error ■ Remove the Comfort handle and reconnect it (see "Installation and connection – Connecting the Comfort handle"). ■ Remove the battery, wait for 10 seconds and reinsert it.
Bottom and top indicators are flashing quickly	Internal system error ■ Remove the battery, wait for 10 seconds, reinsert it and charge it.
The bottom and middle indicators are flashing quickly	"Battery overheating" or "Battery not recognized" error ■ Wait for approximately 30 minutes before switching the vacuum cleaner back on again. ■ Insert an original Miele AP01/AP02/AP03 lithium-ion rechargeable battery (HX LA).

Problem solving guide

Many malfunctions and faults that can occur in daily operation can be easily remedied. You can save time and money in many cases, as you do not need to call the Miele Customer Service Department.

Information to help you rectify faults yourself can be found at www.miele.com/service.

The following tables are designed to help you to find the cause of a malfunction or a fault and to resolve it.

⚠ Risk of injury caused by rotating roller brush.
You can injure yourself on the rotating roller brush.
Switch the vacuum cleaner off before dealing with any problems. Use the On/Off switch on the Comfort handle to do this.

Problem	Cause and remedy
The vacuum cleaner does not start when it is switched on.	There is no battery inserted or the battery has been inserted incorrectly. ■ Insert the battery or check how the battery is positioned (see “Installation and connection” – “Inserting the battery”).
	The rechargeable battery is not sufficiently charged. ■ Charge the battery exactly as described in these operating instructions (see “Installation and connection” – “General battery information” and “Charging the battery”).
	An original Miele battery has not been inserted. ■ Insert an original Miele AP01/AP02/AP03 lithium-ion rechargeable battery (HX LA).
	The battery was not placed in the PowerUnit when charging it for the first time. ■ To activate the battery, it must be placed in the PowerUnit the first time it is charged (see “Installation and connection” – “General battery information” and “Charging the battery”).
	The charging plug is still plugged in. ■ Pull the charging plug out of the charging socket on the bottom of the battery.

Problem	Cause and remedy
The operating noise is changing during vacuuming.	The Electrobrush power consumption is automatically set to the optimum level based on the type of flooring. ■ The noise is not unusual – the vacuum cleaner is functioning normally.
The Electrobrush switches itself off.	The Electrobrush is overloaded – this can happen on surfaces like deep-pile carpet. ■ Switch the vacuum cleaner off and switch it on again at a reduced suction power level. Use the On/Off switch on the Comfort handle to do this.
The roller brush is not rotating.	The roller brush is dirty. ■ Clean the roller brush (see “Maintenance – Cleaning the Electrobrush” and “Removing the roller brush from the Electrobrush”).
Cleaning performance is reduced.	The fine dust filter/pre-filter is soiled. ■ Run the interim cleaning function for the fine dust filter (see “Maintenance – Activating the Comfort-Clean function”). ■ Clean both filters thoroughly (see “Maintenance – Cleaning the pre-filter and fine dust filter”).
	The fine dust filter is worn. ■ Insert a new fine dust filter (HX FSF-2).
The cleaning performance is poor.	The dust container is full. ■ Empty and clean the dust container (see “Maintenance”).
	The Electrobrush is dirty/blocked. ■ Clean the Electrobrush (see “Maintenance – Cleaning the Electrobrush” and “Removing the roller brush from the Electrobrush”).
The vacuum cleaner keeps falling over.	You have configured the vacuum cleaner with the PowerUnit at the top. ■ Reassemble the vacuum cleaner so that it is configured with the PowerUnit at the bottom (see “Installation and connection – Assembling the vacuum cleaner”).

Service

Information to help you rectify faults yourself and about Miele spare parts can be found at www.miele.com/service.

Contact in case of malfunction

In the event of any faults which you cannot remedy yourself, please contact your Miele Dealer or Miele Service.

Contact information for Miele Service can be found at the end of this document.

Please note that telephone calls may be monitored and recorded for training purposes and that a call-out charge will be applied to service visits where the problem could have been resolved as described in this booklet.

Warranty

For information on the appliance warranty specific to your country please contact Miele. See back cover for address.

In the UK, your appliance warranty is valid for 2 years from the date of purchase. However, you must activate your cover by calling 0330 160 6640 or registering online at www.miele.co.uk.

Cleaning and care

⚠ Risk of injury caused by rotating roller brush.

You can injure yourself on the rotating roller brush.

Always switch the vacuum cleaner off before cleaning it. Use the On/Off switch on the Comfort handle to do this.

Vacuum cleaner and accessories

⚠ Risk of electric shock from mains voltage.

If moisture gets into the charger, there is a risk of electric shock.

Do not let the charger get wet.

Follow the special cleaning instructions for the dust container in the “Maintenance” section.

The vacuum cleaner and all plastic accessories should be cleaned with a commercially available cleaner suitable for plastic.

⚠ Damage due to unsuitable cleaning agents.

All surfaces are susceptible to scratching. Contact with unsuitable cleaning agents can alter or discolour all surfaces.

Do not use abrasive cleaning agents, glass cleaning agents, all-purpose cleaners or oil-based care products.

Optional accessories

Follow the flooring manufacturer's cleaning and care instructions.

We recommend using only genuine Miele accessories bearing the "ORIGINAL Miele" logo on the packaging. Only these will guarantee the optimum performance of your vacuum cleaner and the best possible cleaning results.

Please note that faults and damage caused by use of accessories which do not bear the "ORIGINAL Miele" logo on the packaging are not covered by the vacuum cleaner warranty.

Purchasing accessories

Original Miele accessories are available from the Miele webshop, the Miele Customer Service Department and from your Miele dealer.

Original Miele accessories are identified by the "ORIGINAL Miele" logo on the packaging.

With 3D4U, Miele also offers free accessories to download for your 3D printer (www.miele.com, Service, 3D4U).

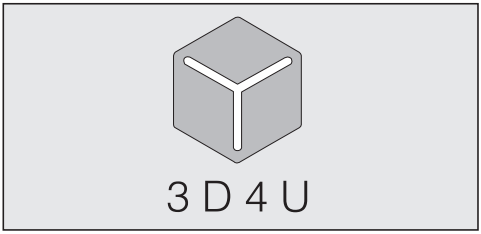

Certain models are supplied with one or more of the following accessories as standard.

Electro Compact handheld brush (HX-EC 10)

For intensive cleaning of car seats and carpeted stairs.

Hardfloor Care soft roller (HX HC)

For cleaning delicate hard floors.

Insert the Hardfloor Care soft roller into the Electrobrush instead of the roller brush fitted as standard (see "Maintenance – Removing the roller brush from the Electrobrush").

When you use the Hardfloor Care soft roller, the Electrobrush power consumption is automatically set to the optimum level – this can lead to a change in the operating noise.

Universal brush (HX-UB)

For gentle vacuuming of books, shelves or similar.

Radiator brush (SHB 30)

For dusting radiators, narrow shelves and crevices.

Mattress nozzle (SMD 10)

For vacuuming upholstery, mattresses, cushions, curtains, covers etc.

Crevice nozzle, 300 mm (SFD 10)

Extra long crevice nozzle for cleaning in folds, crevices and corners.

Crevice nozzle, 560 mm (SFD 20)

Flexible crevice nozzle for vacuuming hard to reach places.

Extendable flexible XL crevice nozzle (HX-CNXL)

The flexible crevice nozzle can reach 60 cm for cleaning hard-to-reach areas.

Hose extension (HX-FSH 10)

For increasing the vacuuming radius by maximum 120 cm.

AP01/AP02/AP03 additional battery (HX LA)

For doubling the amount of time the vacuum cleaner can be used for.

Before charging for the first time, you must read the information in “Installation and connection” – “General battery information”.

LS03 (HX LS) charger cradle

For charging the additional battery independently of the appliance, i.e. while the appliance is in use.

Before charging for the first time, you must read the information in “Installation and connection – General battery information”.

Fine dust filter (HX FSF-2)

To continue achieving the best possible cleaning results, replace the fine dust filter that is fitted as standard with a new one after approx. 3 years (see “Maintenance – Cleaning the pre-filter and fine dust filter”).

Electrical connection for the UK

All electrical work should be carried out by a suitably qualified and competent person in strict accordance with current national and local safety regulations (BS 7671 in the UK). The voltage and frequency are given on the data plate located underneath the vacuum cleaner. Please ensure that these match the household mains supply. The fuse rating is quoted on the plug. The appliance is supplied with a cable and moulded plug ready for connection to a 230-240 V/50 Hz a.c. single phase supply.

United Kingdom
Miele Co. Ltd., Fairacres, Marcham Road, Abingdon, Oxon, OX14 1TW
Tel: 0330 160 6600, Internet: www.miele.co.uk, E-mail: info@miele.co.uk

Australia
Miele Australia Pty. Ltd.
ACN 005 635 398
ABN 96 005 635 398
Level 4, 141 Camberwell Road
Hawthorn East, VIC 3123
Tel: 1300 464 353
Internet: www.miele.com.au

China Mainland
Miele Electrical Appliances Co., Ltd.
1-3 Floor, No. 82 Shi Men Yi Road
Jing' an District
200040 Shanghai, PRC
Tel: +86 21 6157 3500
Fax: +86 21 6157 3511
E-mail: info@miele.cn,
Internet: www.miele.cn

Hong Kong, China
Miele (Hong Kong) Ltd.
41/F - 4101, Manhattan Place
23 Wang Tai Road
Kowloon Bay, Hong Kong
Tel: (852) 2610 1025
Fax: (852) 3579 1404
Email:
customerservices@miele.com.hk
Website: www.miele.hk

India
Miele India Pvt. Ltd.
1st Floor, Copia Corporate Suites,
Commercial Plot 9,
Mathura Road, Jasola,
New Delhi - 110025
E-mail: customercare@miele.in
Website: www.miele.in

Ireland
Miele Ireland Ltd.
2024 Bianconi Avenue
Citywest Business Campus
Dublin 24
Tel: (01) 461 07 10
Fax: (01) 461 07 97
E-Mail: info@miele.ie
Internet: www.miele.ie

Kuwait
Miele Kuwait
Al Wazzan United Trading Co.
P. O. Box : 3379
Hawally, 32034 Kuwait
Tel.: 00965-22001010
Fax: 00965-24838292
E-mail: mail@alwazzanunited.com
Website: www.alwazzanunited.com

Malaysia
Miele Sdn Bhd
Suite 12-2, Level 12
Menara Sapura Kencana
Petroleum
Solaris Dutamas No. 1
Jalan Dutamas 1
50480 Kuala Lumpur, Malaysia
Phone: +603-6209-0288
Fax: +603-6205-3768

New Zealand
Miele New Zealand Limited
IRD 98 463 631
8 College Hill
Freemans Bay, Auckland 1011
New Zealand
Tel: 0800 464 353
Internet: www.miele.co.nz

Singapore
Miele Pte. Ltd.
29 Media Circle
#11-04 ALICE@Mediapolis
Singapore 138565
Tel: +65 6735 1191
Fax: +65 6735 1161
E-Mail: info@miele.com.sg
Internet: www.miele.sg

South Africa
Miele (Pty) Ltd.
63 Peter Place, Bryanston 2194
P.O. Box 69434, Bryanston 2021
Tel: (011) 875 9000
Fax: (011) 875 9035
E-mail: info@miele.co.za
Internet: www.miele.co.za

Thailand
Miele Appliances Ltd.
BHIRAJ TOWER at EmQuartier
43rd Floor Unit 4301-4303
689 Sukhumvit Road
North Klongton Sub-District
Vadhana District
Bangkok 10110, Thailand

United Arab Emirates
Miele Appliances Ltd.
Showroom 1, Eiffel 1 Building
Sheikh Zayed Road, Umm Al Sheif
P.O. Box 114782 - Dubai
Tel. +971 4 3044 999
Fax. +971 4 3418 852
800-MIELE (64353)
E-Mail: info@miele.ae
Website: www.miele.ae

Manufacturer: Miele & Cie. KG, Carl-Miele-Straße 29, 33332 Gütersloh, Germany