Miele

Operating instructions
Washer-dryer

To avoid the risk of accidents or damage to the appliance, it is **essential** to read these instructions before it is installed and used for the first time.

en-AU, NZ

M.-Nr. 12 959 300

Contents

Caring for the environment **6**
Warning and Safety instructions **7**
Operating the washer-dryer **15**
Control panel 15
Touch display and sensors 15
Main menu 16
Examples of how to operate the appliance 17
Applications 18
Before the first use **19**
Networking 20
Requirements for networking 20
1. Setting the language 21
2. Setting up Miele@home 21
3. Setting the clock format 21
4. Removing the transit bars 22
5. Setting up TwinDos 22
6. Starting the calibration programme 25
Environmentally friendly washing and drying **26**
Washing **27**
1. Preparing the laundry 27
2. Selecting a programme 28
3. Selecting programme settings 28
4. Loading the drum 30
5. Adding detergent 31
6. Starting the programme 36
7. End of the programme/unloading laundry 37
Spin cycle 38
Programme chart 40
Programme sequence 45
Extras 48
Detergent 50
Water softeners 50
Fabric softeners, liquid starch, starch 50
Drying **54**
1. Preparing the laundry 54
2. Selecting a programme 55
3. Selecting programme settings 55
4. Loading the drum 56
5. Starting the programme 57
6. End of the programme/unloading laundry 58
Programme chart 59
[1] Timed drying 63
Thermospin 64

Contents

Extras 64
Washing and Drying **65**
1. Preparing the laundry 65
2. Selecting a programme 65
3. Loading the drum 65
4. Selecting programme settings 66
5. Adding detergent 66
6. Starting/Ending the programme 66
After each washing or drying programme **67**
Changing the programme sequence **68**
Changing the programme (safety lock) 68
Cancelling a programme 68
Interrupting a programme 68
Favourite programmes **69**
Creating a favourite programme 69
Washing/Drying assistant **70**
Timer/SmartStart **71**
Replacing the TwinDos cartridge **73**
Cleaning and care **74**
Starting maintenance programmes 74
Clean “TwinDos” 74
Clean machine 75
Rinse out fluff 75
Cleaning the external casing and fascia panel 76
Cleaning the detergent dispenser drawer 76
Cleaning the water inlet filter 78
Descaling the washer-dryer 78
Carrying out descaling 78
Problem solving guide **79**
A programme cannot be started 79
Fault messages after a programme has been cancelled 79
Fault messages at the end of a programme 80
Problems with TwinDos 82
Problems with TwinDos 83
General problems with the washer-dryer 83
An unsatisfactory wash result 86
Unsatisfactory drying result 87
The door will not open 88
Opening the door in the event of a blocked drain outlet and/or power cut 89
Service **91**
Contact in case of fault 91
Optional accessories 91
Warranty 91

Contents

Installation **92**
Front view 92
Rear view 93
Installation surface 94
Carrying the washer-dryer to its installation site 94
Removing the transit bars 94
Refitting the transit bars 95
Additional installation requirements 96
Installing under a continuous worktop 96
Levelling the washer-dryer 96
The Miele water protection system 98
Water inlet 98
Drainage 99
Electrical connection 100
Technical data **101**
Consumption data **102**
Garment care label symbols **103**
Settings **104**
Controls / Display 105
Language 105
Code 105
Memory 105
Clock display 105
Volume 105
Display brightness 106
Units 106
Finish tone behaviour 106
Programme sequence 106
TwinDos 106
Soiling 107
Water plus level 107
Maximum rinse level 107
Soak duration 107
Longer pre-wash Cottons 107
Gentle action 108
Comp laundry protection 108
Drying levels 108
Extended cool down 108
Network 108
Miele@home 108
Remote control 109
SmartGrid 110
Remote Update 110

Contents

Appliance parameters 111
Copyright and licences for operating and control software 111
Copyright and licences for the communication module 111
Operating hours 111
Installation requirements 112
Low water pressure 112
Suds cooling 112
Temperature reduction 112
Factory default 112
Factory default 112

Caring for the environment

Disposal of the packing material

The transport and protective packaging has been selected from materials which are environmentally friendly for disposal, and can normally be recycled.

Recycling the packaging reduces the use of raw materials in the manufacturing process and also reduces the amount of waste in landfill sites. Ensure that any plastic wrappings, bags etc. are disposed of safely and kept out of the reach of babies and young children. Danger of suffocation.

Only for Australia: Note for installer: Expanded polystyrene (EPS) packaging included. Please retain and dispose of EPS packaging responsibly. For further information, please contact Miele.

Disposing of your old appliance

Electrical and electronic appliances often contain valuable materials. They also contain specific materials, compounds and components, which were essential for their correct function and safety. These could be hazardous to human health and to the environment if disposed of with your domestic waste or if handled incorrectly. Please do not, therefore, dispose of your old appliance with your household waste.

Please dispose of it at your local community waste collection / recycling centre for electrical and electronic appliances. You are also responsible for deleting any personal data that may be stored on the appliance prior to disposal. Please ensure that your old appliance poses no risk to children while being stored prior to disposal.

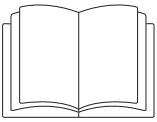

▶ It is **essential** to read these instructions.

This washer-dryer complies with all current local and national safety requirements. However, inappropriate use can lead to personal injury and damage to property.

Read the operating instructions carefully before using the washer-dryer. They contain important information on safety, installation, use and maintenance of the appliance. This prevents both personal injury and damage to the washer-dryer.

In accordance with standard IEC 60335-1, Miele expressly and strongly advises that you read and follow the instructions in "Installation", as well as in the "Warning and Safety instructions".

Miele cannot be held liable for injury or damage caused by non-compliance with these instructions.

Keep these operating instructions in a safe place and pass them on to any future owner.

Correct application

▶ This washer-dryer is intended for use in domestic households and similar residential environments, by guests in hotel or motel rooms, bed & breakfasts and other typical living quarters. This does not include common/shared facilities or commercial facilities within hotels, motels or bed & breakfasts.

▶ This washer-dryer is intended for the following applications only:

- washing textiles which have a care label stating that they are washable.
- drying textiles which have been washed in water and have a care label stating that they are suitable for tumble drying.

All other types of use are not permitted. Miele cannot be held liable for damage resulting from incorrect or improper use or operation.

▶ The washer-dryer is not intended for outdoor use.

▶ This appliance is not intended for use by persons (including children) with reduced physical, sensory or mental capabilities, or lack of experience and knowledge, unless they have been given supervision or instruction concerning its use by a person responsible for their safety.

Safety with children

▶ Young children must be kept away from the washer-dryer unless they are constantly supervised.

▶ Older children may only use the washer-dryer unsupervised if they have been shown how to use it safely. Children must be able to understand and recognise the possible dangers caused by incorrect operation.

▶ Children must not be allowed to clean or maintain the washer-dryer unsupervised.

▶ Please supervise young children in the vicinity of the washer-dryer. Never allow children to play with the appliance.

Technical safety

▶ Before installation check the washer-dryer for visible signs of damage. Do not install or use a damaged appliance.

▶ Before connecting the appliance, make sure that the connection data on the data plate (voltage, frequency, and connected load) match the mains electricity supply. If in doubt, consult a qualified electrician.

▶ The electrical safety of this appliance can only be guaranteed when continuity is complete between it and an effective earthing system which complies with current local and national safety regulations.
It is essential that this standard safety requirement is observed and regularly tested. If in any doubt, have the electrical installation inspected by a qualified electrician.
Miele cannot be held liable for the consequences of an inadequate earthing system (e.g. electric shock).

▶ Do not connect the washer-dryer to the mains electricity supply by a multi-socket adapter, extension lead or similar. These do not guarantee the required safety of the machine (fire hazard due to the risk of overheating).

▶ Unauthorised repairs could result in unforeseen dangers for the user, for which the manufacturer cannot accept liability. Maintenance or repairs must only be carried out by a qualified specialist or Miele Customer Service.

▶ Please observe the instructions in “Installation” and “Technical data”.

▶ This washer-dryer is supplied with a special lamp to cope with particular conditions (e.g. temperature, moisture, chemical resistance, abrasion resistance and vibration). This lamp must only be used for the purpose for which it is intended. The lamp is not suitable for room lighting. Replacement lamps may only be installed by a qualified specialist or Miele Customer Service.
The washer-dryer contains 1 light source corresponding to energy efficiency class G.

▶ The electrical plug must be easily accessible after installation so that the washer-dryer can be disconnected from the electricity supply if necessary.

▶ In the event of a fault or for cleaning purposes, the washer-dryer must be disconnected from the mains electricity supply. It is only completely isolated from the electricity supply when:

- switched off at the wall socket and the power plug is withdrawn from the socket
- the mains circuit breaker has been switched off, or
- the screw-out fuse is removed (in countries where this is applicable).

▶ The Miele water protection system protects from water damage provided the following conditions are met:

- The machine is correctly plumbed in and connected to the electricity supply.
- If a fault or damage has been identified, the washer-dryer must be repaired by a competent person before further use.

▶ The machine must only be connected to the on-site water supply using a new hose kit. Old hose kits must not be re-used. Check the condition of the hoses regularly so that you can replace them in good time and avoid the risk of any water damage.

▶ The water inlet pressure must be at least 100 kPa and must not exceed 1000 kPa.

▶ We recommend replacing faulty components with original Miele parts. If original Miele parts are installed correctly, Miele guarantees full compliance with safety requirements and the warranty remains valid.

▶ If the power supply cord is damaged, it must only be replaced with a specific power supply cord of the same type (available from Miele Customer Service). For safety reasons, replacement may only be carried out by a suitably qualified specialist or Miele Customer Service.

▶ This washer-dryer must not be operated in mobile installations (e.g. on a ship).

▶ Do not make any alterations to the washer-dryer, unless authorised to do so by Miele.

▶ Temporary or permanent operation with a self-sufficient or non-mains synchronous energy supply system (e.g. isolated networks, back-up systems) is possible. A requirement for the operation is that the energy supply system complies with all current local and national requirements that apply to stand-alone, solar and/or battery systems. The protective measures provided in the installation and in this Miele product must also be assured in their function and operation in isolated operation or in non-mains synchronous operation, or replaced with equivalent measures in the installation.

▶ The manufacturer's warranty will be invalidated if the washer-dryer is not repaired by a qualified specialist or Miele Customer Service.

▶ In areas which may be subject to infestation by cockroaches or other vermin, pay particular attention to keeping the machine and its surroundings in a clean condition at all times. Any damage which may be caused by cockroaches or other vermin will not be covered by the machine warranty.

Correct use

WARNING:
FLAMMABLE MATERIAL

Warning: Risk of fire / Flammable materials. To avoid the possible danger of fire, please read these warnings carefully.

▶ Do not install the washer-dryer in rooms that are subject to frost. Frozen hoses may burst or split, and the reliability of the electronic control unit may be impaired at temperatures below freezing point.

▶ Before using the machine for the first time, check that the transit bars at the rear of the appliance have been removed (see “Installation - Removing the transit bars”). During the spin cycle, a transit bar which is still in place may result in damage to the washer-dryer and adjacent furniture or appliances.

▶ Turn off the tap if the washer-dryer is to be left for a longer period of time (e.g. while on holiday), especially if there is no floor drain (gully) in the immediate vicinity.

▶ Danger of flooding! If hooking the drain hose into a wash basin, check that the water can drain away fast enough to prevent the sink from overflowing. Secure the drain hose against slipping. The force of the water flowing out of the hose can dislodge it.

▶ Make sure that no foreign objects (e.g. nails, pins, coins, paper clips) find their way into the machine with the laundry. These may damage components of the machine (e.g. suds container, drum). Damaged components can, in turn, result in damage to the laundry.

▶ Take care to remove any detergent dispensing aids (e.g. detergent balls) before drying the laundry. These can melt during the drying programme and cause damage to the machine and the laundry.

▶ Risk of burning or scalding due to hot temperatures. The metal cap located on the inside of the door glass will be hot after drying. Open the door wide after drying. Do not touch the metal cap.

▶ Fabric softener and similar products must be used according to the instructions on the manufacturer's packaging.

▶ Be careful when opening the door following use of the steam function. There is a danger of burning due to escaping steam and the high temperature of the surface of the drum as well as the porthole glass. Stand back away from the machine and wait until the steam has dissipated.

▶ To prevent the risk of fire, the following textiles must **not** be dried in this washer-dryer:

- Items which have not been washed.
- Items, such as workwear, which have not been thoroughly cleaned and are still soiled with grease, oil or other deposits (such as cooking oils, cosmetics, lotions etc). If items have not been thoroughly cleaned, there is a danger that they might ignite when heated, even after they have been removed from the dryer at the end of the programme.
- Items that have been soiled with flammable substances such as cooking oil, acetone, petrol, kerosene, spot removers, turpentine, waxes, wax removers and other chemicals (e.g. mops and floor cloths).
- Items which have been splashed with hair lacquer, hair spray, nail varnish remover or similar substances.

When washing such heavily soiled items ensure that you use sufficient detergent and select a high temperature. If in doubt, wash the items several times.

▶ To prevent the risk of fire, the following textiles must never be dried in this washer-dryer:

- Items which have been cleaned using chemicals (e.g. professional dry-cleaning agents).
- Fabrics which contain a large proportion of rubber, foam rubber or rubber-like materials. For example, products made from latex foam rubber, shower caps, waterproof textiles, rubberised articles and items of clothing and pillows with foam rubber filling.
- Fabrics which contain padding or fillings (e.g. pillows, jackets). If these were damaged the filling could come out with the risk of igniting in the dryer.

▶ Only use dyes specified by the manufacturer as being suitable for use in a domestic washer-dryer, and only use them in domestic quantities. Always observe the manufacturer's instructions carefully.

▶ Dye removers contain sulphur compounds which can cause damage such as corrosion. Do not use dye removers in this washer-dryer.

▶ In many programmes, the heating phase is followed by a cooling down phase to ensure that the items are not too hot to handle when you remove them (this also reduces the risk of the laundry self-igniting). The programme is not finished until after the cooling down phase. It is advisable to remove all laundry as soon as the programme has finished.

▶ Do not switch the washer-dryer off before the end of the drying programme, unless all items are removed immediately and spread out to cool down.

▶ This washer-dryer must not be connected to a controllable socket, e.g. a timer or a peak-load switch-off device. There is a risk of the laundry igniting itself if a drying programme is cancelled before the cooling phase has finished.

▶ Fabrics that have been pre-treated in solvent-based cleaning agents must be thoroughly rinsed in clean water before being placed in the machine.

▶ Never use solvent based cleaning agents (e.g. one containing benzine) in this washer-dryer. This may result in damage to component parts and create toxic fumes. Risk of fire and explosion!

▶ If detergent has come into contact with the eyes, rinse out immediately with plenty of lukewarm water. If detergent has accidentally been ingested seek medical advice immediately. People with damaged or sensitive skin should avoid contact with the detergent.

▶ The maximum dry laundry weight is 8.0 kg for washing and 4.0 kg for drying. See the “Programme chart” for the maximum recommended loads for individual programmes.

▶ Fluff must not be allowed to accumulate in and around the tumble dryer.

▶ Oil-affected items can ignite spontaneously, especially when exposed to heat sources such as in a tumble dryer. The items become warm, causing an oxidation reaction in the oil. Oxidation creates heat. If the heat cannot escape, the items can become hot enough to catch fire. Piling, stacking or storing oil-affected items can prevent heat from escaping and so create a fire hazard.

▶ If it is unavoidable that fabrics contaminated with vegetable or cooking oil, or hair care products, are placed in a tumble dryer, they should first be washed in hot water with extra detergent - this will reduce, but not eliminate, the hazard.

▶ Remove all items from pockets (e.g. lighters, matches).

Accessories

▶ We recommend using original Miele accessories. Using spare parts or accessories from other manufacturers will invalidate the warranty and Miele cannot accept liability.

▶ Miele original spare parts are kept in stock for at least 10 years and up to 15 years after discontinuation of your washer-dryer.

Miele cannot be held liable for damage caused by non-compliance with these Warning and Safety instructions.

Control panel

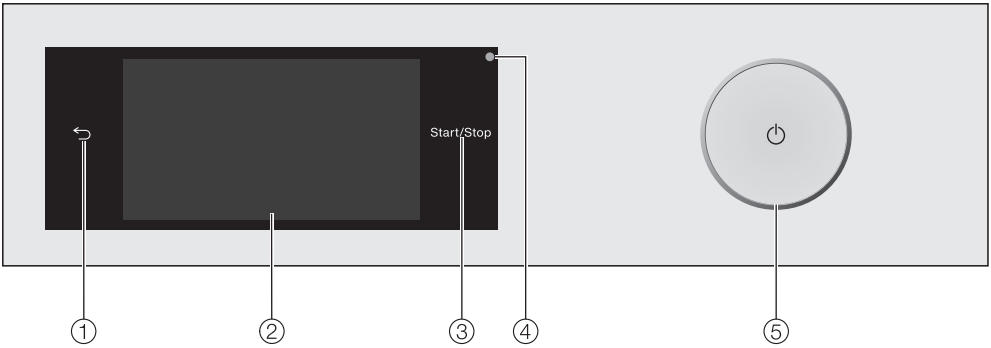

① ⮌ **sensor**
Takes you back one level in the menu.

② **Touch display**

③ ***Start/Stop* sensor**
Touching the *Start/Stop* sensor starts the selected programme or cancels a programme that has already started. The programme can be started as soon as the sensor is flashing on and off. The sensor lights up constantly once the programme has started.

④ **Optical interface**
For service technicians.

⑤ ⏻ **sensor**
For switching the washer-dryer on and off. The washer-dryer switches off automatically to save energy. It is switched off 15 minutes after the end of the programme/Anti-crease phase, or after being switched on if no further selection is made.

Touch display and sensors

The ⮌ and *Start/Stop* sensors and the sensors in the display react to fingertip contact.

The touch display can be scratched by pointed or sharp objects, e.g. pens.
Only touch the display with your fingers.

Main menu

After switching on the washer-dryer, the main menu will appear in the display.

You can access all important sub-menus from the main menu.

Touch the ⌂ sensor at any time to return to the main menu. Values that have not yet been confirmed are not saved when you return to the main menu.

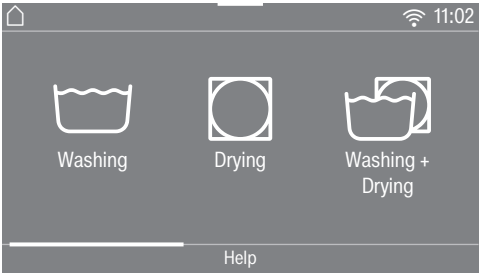

You can scroll to the next page of the main menu by swiping your finger across the display.

or

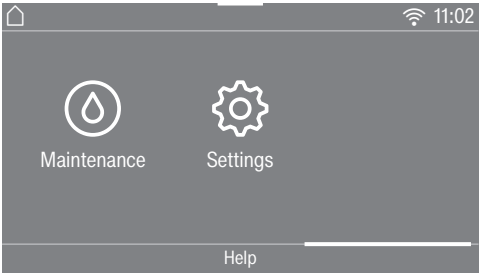

Washing

You can select various wash programmes.

Drying

You can select various drying programmes.

Washing + Drying

You can select programmes which include a continuous washing and drying sequence.

Favourites

You can save up to 12 of your own customised wash programmes.

MobileStart

You can operate your washer-dryer remotely with MobileStart using the Miele App.

The Remote control setting must be switched on.

Touch the MobileStart sensor and follow the instructions in the display.

Washing/Drying assistant

The *Washing and Drying assistant* guides you step by step so that you can select the optimum wash programme and drying programme for your laundry.

Maintenance

Maintenance options for the TwinDos system and the Rinse out fluff and Clean machine programmes are located in the Maintenance menu (see “Cleaning and care”).

Settings

You can alter the washer-dryer's electronics to suit different requirements in the Settings menu (see "Settings").

Examples of how to operate the appliance

Selection lists

Washing menu (single selection)

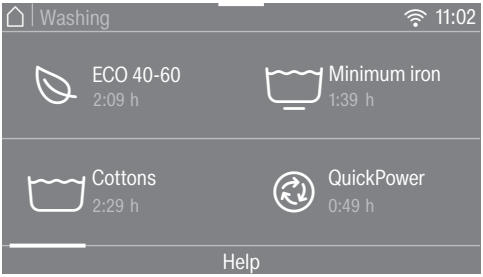

You can scroll to the right or the left by swiping your finger across the screen. Place your finger on the touch display and swipe it in the direction you want.

The orange bar under the pictures shows that there are further options to choose from.

To select a wash programme, touch a programme name.

The display will change to the standard display for that programme.

Extras menu (multiple selection)

You can scroll to the right or the left by swiping your finger across the screen. Place your finger on the touch display and swipe it in the direction you want.

The orange bar under the pictures shows that there are further options to choose from.

To select *Extras*, touch one or more sensors with *Extras*.

Currently selected *Extras* are marked orange.

To deselect an *Extra*, simply touch the *Extra* sensor again.

Use the *OK* sensor to activate the selected *Extras*.

Setting numerical values

You can set numerical values in some menus.

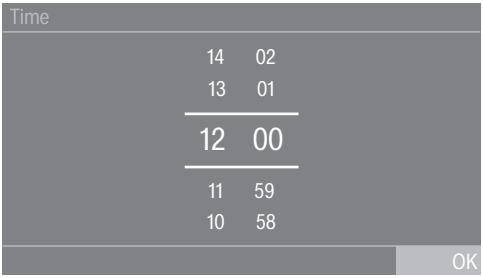

Enter the numbers by swiping upwards or downwards. Place your finger on the number that you want to change and

move your finger in the desired direction. Use the *OK* sensor to accept the set numerical value.

Useful tip: Briefly touching the numbers will bring up the numerical keypad. Once a valid number has been entered, the *OK* sensor will be highlighted green.

Pull-down menu

The pull-down menu can be used to display information, e.g. about a wash programme.

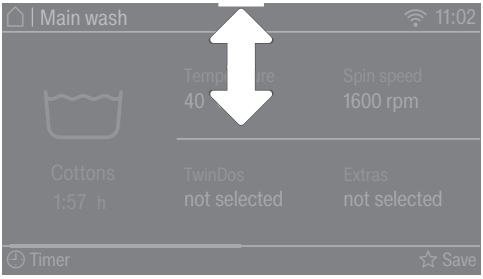

Touch the top edge of the screen in the middle and drag down with your finger.

Help display

Help appears along the bottom line of the display in the main menu and the programme selection menus.

- Touch the Help sensor to display the text.
- Touch the Close sensor to return to the previous screen.

Exiting a menu

- Touch the ⮌ sensor to return to the previous screen.

Entries made before this which have not been confirmed with *OK* will not be saved.

Applications

You can use this washer-dryer to:

- **wash separately**
  Maximum load (depending on programme) 8.0 kg.
- **dry separately**
  Maximum load (depending on programme) 4.0 kg.

  or
- **wash and dry in a continuous sequence**
  Maximum load (depending on programme) 4.0 kg.

⚠ Damage resulting from incorrect installation and connection.
Installing and connecting the washer-dryer incorrectly will cause serious property damage.
Please observe the instructions in "Installation".

This washer-dryer has undergone a complete functional test at the factory and there will be some residual water in the drum from this process.

Removing the protective foil and advertising stickers

■ Remove:

- the protective foil from the door (if present).
- any advertising stickers from the front and the lid.

Please do not remove any labels (e.g. the data plate) which are visible when you open the door.

Remove the detergent cartridges and the drain hose elbow from the drum

Two detergent cartridges for automatic detergent dispensing and an elbow piece for the drain hose are stored in the drum.

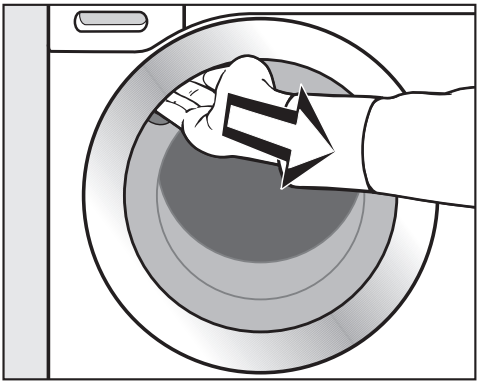

■ Reach under the door grip and pull the door open.

■ Take the two cartridges and the elbow piece out of the drum.

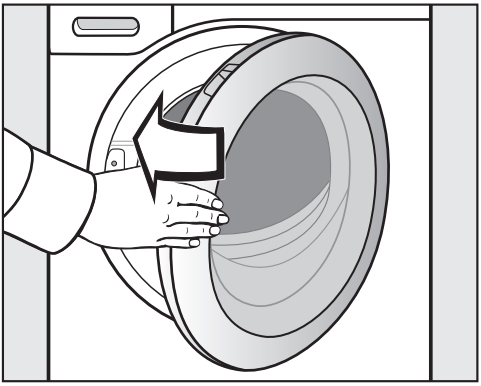

■ Shut the door with a gentle swing.

Networking

Your washer-dryer is equipped with an integrated Wi-Fi module. The Wi-Fi module makes it possible to connect to your home network and to use the Miele App on a mobile device.

Once your washer-dryer has been connected via Wi-Fi, the connection is automatically re-established every time it is switched on.

Make sure that your Wi-Fi network signal is strong enough in the place where you intend to install your washer-dryer.

Connecting your washer-dryer to your Wi-Fi network will increase energy consumption, even when the washer-dryer is switched off.

Smart Extras via the Miele App*

Networking via the Miele App gives you access to numerous Smart Extras, including:

- Accessing status information.
- Using additional helpful functions.
- Keep your washer-dryer up to date with the latest Miele developments via software updates.

You can find more detailed information about Smart Extras on the Miele website, in the Apple App Store® or in the Google Play Store™.

*This is a separate digital offer from Miele & Cie. KG. The range of functions can vary depending on the model and the country. Acceptance of the General Terms and Conditions and Privacy Policy for Miele digital products and services in the Miele App is required. Miele reserves the right to change or discontinue the digital offers at any time.

Requirements for networking

Note the following requirements for networking:

1. A home network is available at the installation site.
   Have the Wi-Fi password ready.
2. The Miele App is available on a mobile device.
3. You have a user account in the Miele App.

Miele App

You can download the Miele App from the Apple App Store® or the Google Play Store™ free of charge (only functional in selected countries).

Download on the App Store

ANDROID APP ON Google Play

Switching the washer-dryer on

■ Press the ⏻ sensor.

The welcome screen will light up.

The display will guide you through the **6 steps** of the initial commissioning process.

1. Setting the language

You will be asked to select the language for the display. It is possible to change the language at any time via the *Settings menu*.

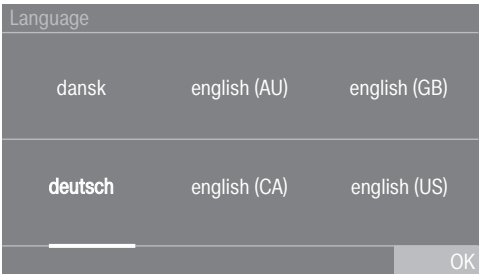

■ Scroll to the left or the right until the language you want appears.

■ Touch the sensor for the required language.

The selected language will be highlighted in orange and the display will change to the next setting.

2. Setting up Miele@home

■ To set up Miele@home now: touch the Continue sensor.

Useful tip: To postpone set-up until later: touch the Skip sensor. The following message will appear in the display:
ℹ It is possible to set up later in “Settings” / “Miele@home”..
Confirm with the *OK* sensor.

Selecting a connection method

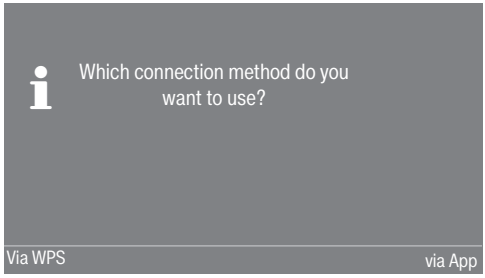

■ Select the connection method you wish to use.

You will then be guided by the display and the Miele App.

3. Setting the clock format

The time of day display can be in 12 h or 24 h clock format.

■ Select the clock format you want and confirm this with the *OK* sensor.

The display will then bring up the screen for setting the time of day.

Setting the time of day

This message only appears if the washer-dryer has not yet been connected to a Wi-Fi network. The time of day is set automatically if connection is established with a Wi-Fi network.

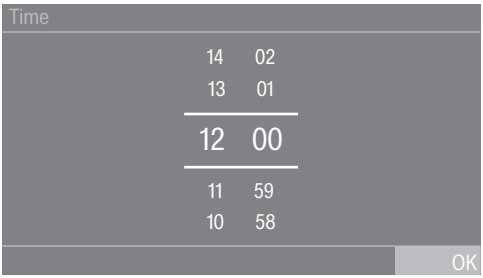

- Place your finger on the number that you want to change and move your finger in the desired direction.
- Confirm with the *OK* sensor.

4. Removing the transit bars

⚠ Damage resulting from failure to remove the transit bars.
Failure to remove the transit bars can result in damage to the washer-dryer and to adjacent cabinetry or appliances.
Remove the transit bars as described in “Installation”.

The following message appears in the display:

ℹ Remove transit bars and observe “Warning and Safety instructions” and “Before using for the first time” in the operating instructions

- Confirm that the transit bars have been removed with the *OK* sensor.

The display will change to the next setting.

5. Setting up TwinDos

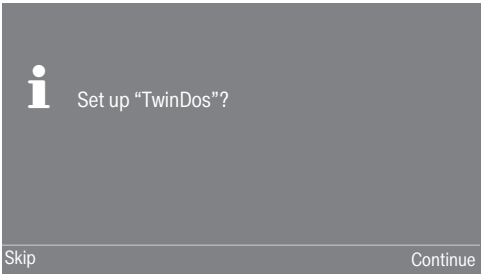

- Touch the Continue sensor to set up TwinDos straight away.

Useful tip: To postpone set-up until later: touch the Skip sensor. The following message will then appear in the display:
ℹ It is possible to set up later in “Settings” / “TwinDos”.
Confirm with the *OK* sensor.

Setting up compartment ①

The procedure below describes the procedure for Miele UltraPhase 1 and Miele UltraPhase 2. The procedure for other detergents is similar.

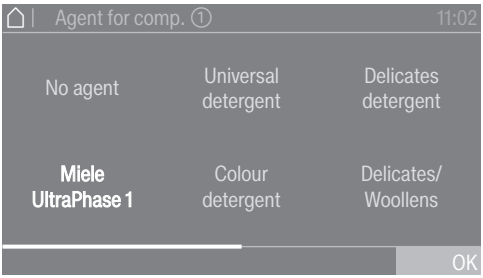

- Touch the Miele UltraPhase 1 sensor.

The following message appears in the display:

ℹ Please enter the dosing recommendation of your detergent for a wash with normal soiling. Take note of your water hardness level.

The dispensing quantity for UltraPhase 1 is preset for **(water hardness level II)**.

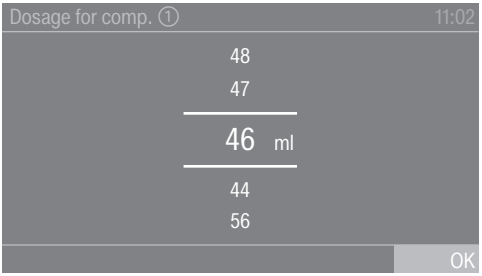

- Confirm the preset value with the *OK* sensor, or change the value.

UltraPhase 1		
	Hardness level I	46 ml
	Hardness level II	58 ml
	Hardness level III	70 ml

The following will appear in the display:

ℹInsert container ①

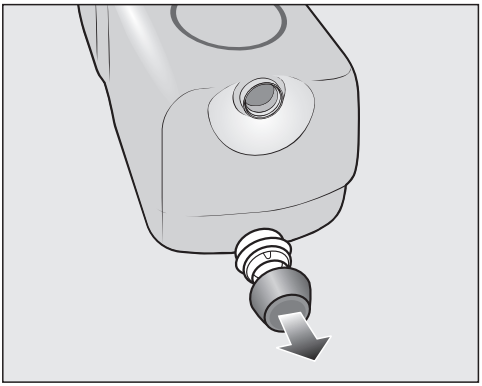

- Remove the cover cap from the UltraPhase 1 detergent cartridge included with the delivery.

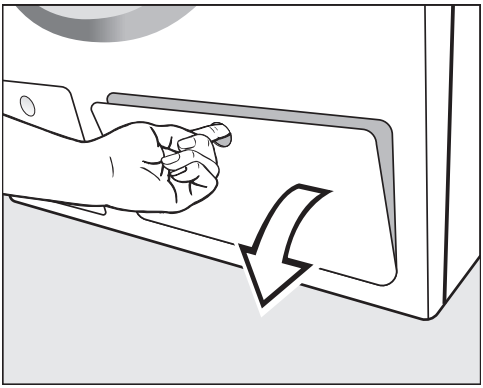

- Open the access panel for TwinDos.

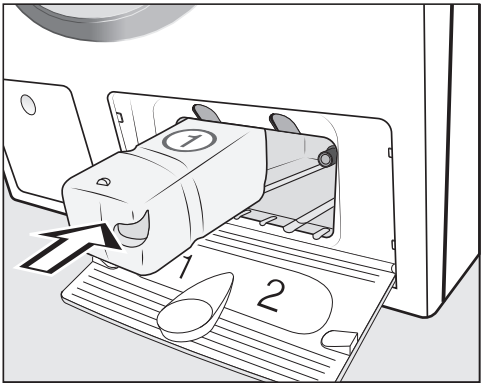

- Push the UltraPhase 1 detergent cartridge into compartment 1 until it locks into position.

The following message appears in the display:

ℹNow enter the settings for UltraPhase 2.

Setting up compartment ②

The dispensing quantity for UltraPhase 2 is preset for **(water hardness level II)**.

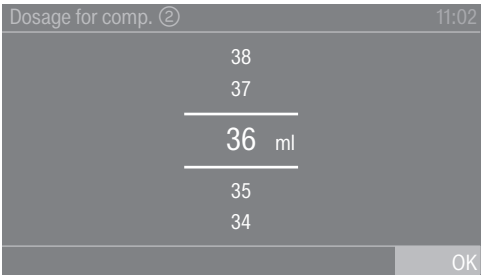

■ Confirm the preset value with the *OK* sensor, or change the value.

UltraPhase 2		
	Hardness level I	36 ml
	Hardness level II	45 ml
	Hardness level III	54 ml

The following will appear in the display:

ℹInsert container ②

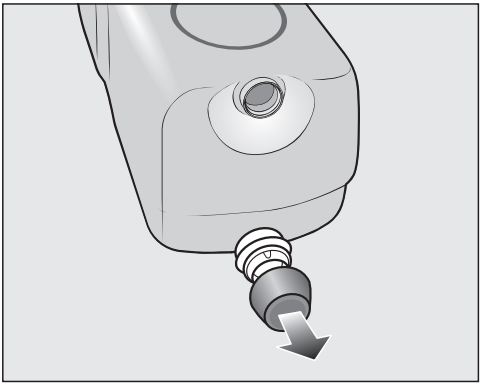

■ Remove the cover cap from the UltraPhase 2 detergent cartridge included with the delivery.

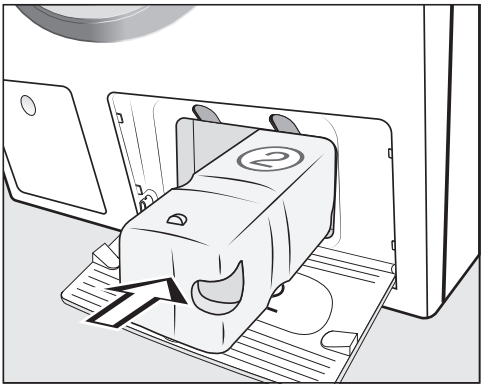

■ Push the UltraPhase 2 detergent cartridge into compartment 2 until it locks into position.

The following message appears in the display:

ℹ"TwinDos" is set up. Changes can be made in "Settings" / "TwinDos".

■ Confirm with the *OK* sensor.

■ Close the TwinDos access panel.

The display will then change to the calibration programme.

6. Starting the calibration programme

It is important to calibrate the washer-dryer to ensure optimum water and energy usage, as well as optimum washing and drying results.

To do this, the *Cottons* programme **must** be run without laundry and without detergent.

No other programmes can be started until calibration has been carried out.

The following message appears in the display:

ℹ Turn on the tap and run the "Cottons" programme at maximum temperature without any laundry

- Confirm with the *OK* sensor.

The display will then change to the standard display for the *Cottons* programme.

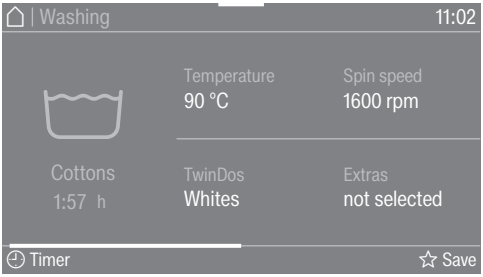

- Turn on the tap.
- Touch the *Start/Stop* sensor.

The calibration programme will start. It will take approximately 2 hours.

At the end of the programme the following message will appear in the display:

ℹ Set-up completed

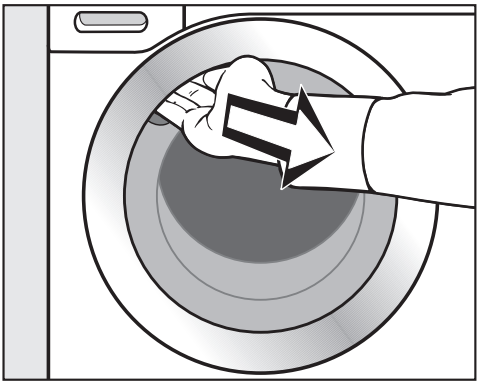

- Reach under the door grip and pull the door open.

Useful tip: For safety reasons, close the door when the machine is not in use. Otherwise there is a danger of objects being placed inadvertently in the drum. If these remain unnoticed and were washed in the next load, they could damage the laundry. An open door is also a danger to pets and children.

- Switch the washer-dryer off with the ⏻ sensor.

Energy and water consumption

- Use the maximum load size for the current programme. The energy and water consumption will then be the lowest in relation to the size of the load.
- Programmes that are more efficient with regard to energy and water consumption generally have a longer programme running time. By extending the programme running time, the wash temperature that is actually reached can be reduced while still providing the same wash results. For example, the ECO 40-60 programme has a longer running time than the Cottons 40°C or 60°C programme. The ECO 40-60 programme, however, is more efficient in terms of energy and water consumption.
- Use the Express 20 programme for small, lightly soiled loads.
- Modern detergents make it possible to wash at lower temperatures (e.g. 20°C). Using lower temperature settings will save energy.
- To maintain the hygiene of the machine, carry out a hot wash (above 60°C) at regular intervals. The message Hygiene info: Select "Maintenance" and start the "Clean machine" programme. will appear in the display to remind you to carry out a hot wash.

Detergent

- For precise dispensing, use automatic detergent dispensing.
- Adjust the dosage to the degree of soiling of the laundry.
- Do not exceed the amounts of detergent recommended by the manufacturer on the packaging.

Information about subsequent tumble drying

To save energy when tumble drying, select the highest possible spin speed for the wash programme and for the thermospin.

1. Preparing the laundry

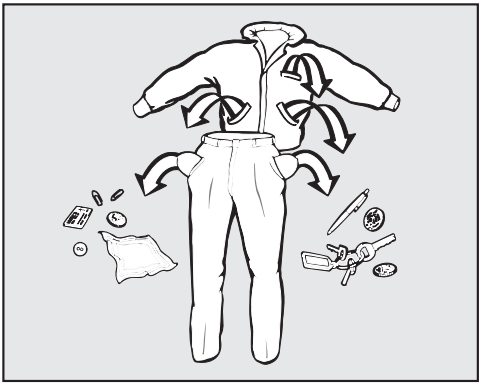

■ Empty all pockets.

⚠ Damage due to foreign objects.
Foreign objects (nails, coins, paper clips, etc.) can cause damage to garments and to components in the machine.
Check the laundry before washing and remove any foreign objects.

Sorting the laundry

■ Sort the laundry by colour and by care label. Most garments have a textile care label in the collar or side seam.

Useful tip: Dark textiles often contain excess dye and should be washed separately several times before being included in a mixed load. Wash light and dark coloured items separately.

Pre-treating stains

■ Badly soiled areas and stains should be cleaned as soon as possible, preferably whilst still fresh. Spillages should be carefully dabbed off using a soft, colourfast cloth. Do not rub.

Useful tip: Stains (e.g. blood, egg, coffee, tea) can be pre-treated using some handy tricks which can be found under the "ABC of Stains" on the Miele website.

⚠ Damage due to solvent-based cleaning agents.
Cleaning agents containing benzine, stain remover, etc., can damage plastic parts.
When pre-treating garments, make sure that any plastic parts (e.g. buttons) do not come into contact with cleaning agent.

⚠ Risk of explosion due to solvent-based cleaning agents.
If solvent-based cleaning agents are used, an explosive mixture can form.
Never use solvent-based cleaning agents in the washer-dryer.

General tips

- Curtains: remove lead weights first or place in a laundry bag.
- Remove or sew in any loose underwiring in bras or shirt collar stiffeners.
- Close any zips, attach velcro fasteners, fasten hooks and eyes, etc. before washing.
- Fasten duvet covers and pillow cases to prevent small items from being rolled up inside them.

Do not wash items which are specified by the manufacturer as **not washable** on the care label (symbol).

2. Selecting a programme

Switching the washer-dryer on

■ Press the ⏻ sensor.

The interior drum lighting will come on.

The drum lighting will go out automatically after a few minutes.

Useful tip: To switch the drum lighting on again, open the pull-down menu from the overview menu and then touch the ☼ sensor.

The main menu will then appear in the display.

Selecting a programme

■ Touch the Washing sensor.

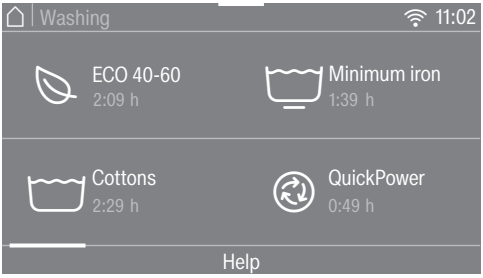

■ Scroll to the right of the display until the programme you want appears.

■ Touch the sensor for that programme.

The display will then change to the standard menu for the programme.

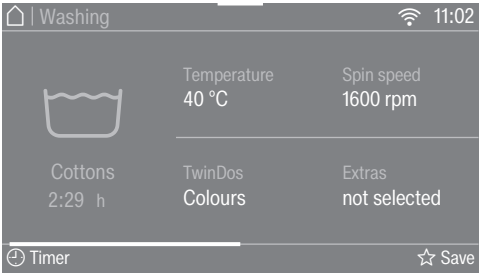

There are 3 other ways to select a programme:

- Saved favourite programmes
- The Washing/Drying assistant
- Miele MobileStart

3. Selecting programme settings

Selecting the temperature

You can alter the preset temperature of the wash programme.

The temperatures reached inside the washer-dryer may differ from the selected temperatures. The combination of energy input and washing time achieves an optimum washing result.

■ Touch the Temperature sensor.

■ Select the desired temperature.

The display will change to the standard menu for that wash programme.

Selecting a spin speed

You can alter the preset spin speed of the wash programme.

■ Touch the Spin speed sensor.

■ Select the desired spin speed.

The display will change to the standard menu for that wash programme.

Activating TwinDos

TwinDos dispensing is automatically activated for all programmes in which dispensing is possible.

1. Switch TwinDos on or off

■ Touch the TwinDos sensor and select Off or On.

2. Select the detergent

When using Miele's 2-phase system you must set the colour of the laundry.

- Select Whites for loads of white items, or Colour for loads containing coloured items.

If you are using a different type of detergent, this must be selected.

- Select compartment ① or ②.

Useful tip: Only those detergents that can be used with the programme are displayed.

3. Select the degree of soiling

The display will ask you to enter the degree of soiling of the laundry.

- Select Light, Normal or Heavy.
- Confirm your selection with the *OK* sensor.

TwinDos is switched on.

The display will change to the standard menu for that wash programme.

See “Washing – 5. Adding detergent – TwinDos“ for more information.

Selecting Extras

You can supplement the wash programmes with Extras.

- Touch the Extras sensor.
- Select one or more Extras.

Not all Extras can be combined. Extras that cannot be combined are greyed out and cannot be selected.

- Confirm with the *OK* sensor.

The display will change to the standard menu for that wash programme.

See “Washing – Extras” for more information.

Activating CapDosing

You can use CapDosing with a wash programme.

- Touch the CapDosing sensor.

The types of capsules which can be used with the programme will appear in the display.

- Select the type of capsule you want to use.

CapDosing is now active.

The display will then change to the standard menu for that wash programme.

See “Washing – 5. Adding detergent - CapDosing“.

Selecting stains

In order to clean stained laundry more effectively, you can choose from a list of various types of stains. The wash programme will then adapt to the type of stain selected.

- Touch the Stains sensor.
- Select the type of stains in your load from the list.
- Confirm your selection with the *OK* sensor.

With some stains, helpful information will also appear in the display when they are selected.

- Confirm the information with the *OK* sensor.

The display will then change to the standard menu.

Timer

You can use the Timer to set the finish time or the start time for a programme.

See "Timer/SmartStart" for further information.

4. Loading the drum

Opening the door

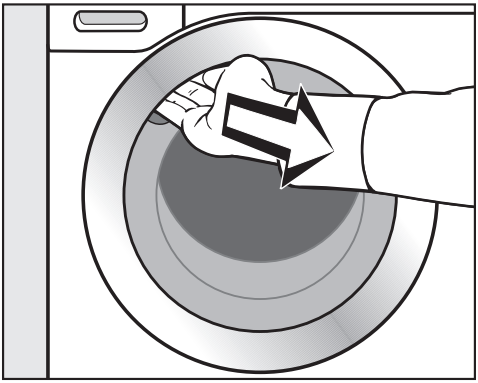

- Reach under the door grip and pull the door open.

Check the drum for pets or foreign objects before loading it with laundry.

- Unfold the laundry and load loosely in the drum.

Mixing both large and small items gives better wash results and helps distribute the load evenly during spinning.

The most efficient use of energy and water is achieved when a full load is washed. However, do not overload as this reduces cleaning efficiency and causes creasing.

Useful tip: The maximum load size for the programme selected will appear in the pull-down menu.

Closing the door

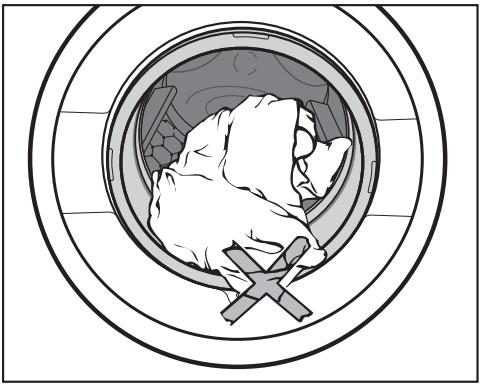

- Make sure that no items are caught between the door and the seal.

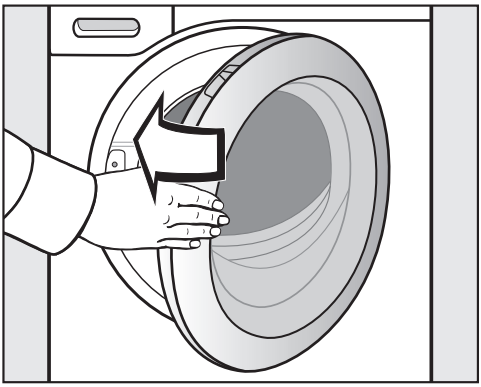

■ Shut the door with a gentle swing.

5. Adding detergent

Detergent can be dispensed via TwinDos Ⓐ, via the detergent dispenser drawer Ⓑ or with CapDosing Ⓒ.

Ⓐ TwinDos

The washer-dryer has the TwinDos system.

TwinDos must be activated (see “Before the first use”).

How UltraPhase 1 and UltraPhase 2 work

UltraPhase 1 is a liquid detergent which dissolves dirt and removes the most common stains. UltraPhase 2 is a bleaching agent and removes stubborn stains. For the best washing result, these two agents are dispensed at separate times during the wash process. UltraPhase 1 and UltraPhase 2 clean white and coloured fabrics thoroughly. UltraPhase 1 and UltraPhase 2 single-use cartridges are available from shop.miele.com or from Miele Experience centres.

Activating TwinDos dispensing

TwinDos dispensing is automatically activated for all programmes in which dispensing is possible.

Useful tip: The detergent dispensing quantities are preset. If too much foam builds up, the dispensing quantity can be reduced via the ⚙ *Settings* menu, *Programme sequence*, *TwinDos*.

Changing TwinDos dispensing

You can change the suggested colour composition of the laundry.

- Touch the TwinDos sensor and select the colour composition of your laundry.

Deactivating TwinDos dispensing

- Touch the TwinDos sensor.
- Touch the Off sensor.

Selecting the degree of soiling

The level of soiling in laundry is divided into three settings:

- Light
  No visible soiling or stains
- Normal
  Visibly soiled and/or just a few slight stains
- Heavy
  Heavily soiled and/or stains clearly visible

The dispensing amount for TwinDos and the amount of water required for rinsing is preset for the Normal level of soiling.

- Touch the TwinDos sensor to select a different level of soiling.

The amount of detergent and water will be adjusted to suit the selected level of soiling.

Some programmes will not let you set the level of soiling. These programmes are designed for lightly soiled laundry only.

Using other methods to remove stains

If you wish to use additional methods of stain removal, you have the following options:

- Using the Booster capsule and activating CapDosing
- Add the stain remover to the compartment in the detergent dispenser drawer.

Ⓑ Detergent dispenser drawer

Any detergent suitable for automatic front loading washing machines can be used with this appliance. Please observe the instructions for use and dosage on the detergent packaging.

Ensure that TwinDos dispensing is deactivated.

Adding detergent

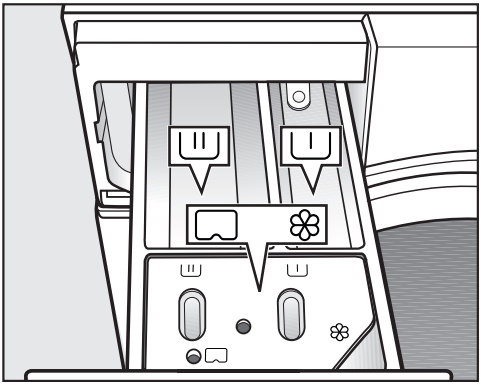

- Pull out the detergent dispenser drawer and add detergents to the compartments.

I Detergent for the pre-wash

II Detergent for the main wash and soaking

Fabric softener, liquid starch, or capsules

Using liquid detergent with a pre-wash

Liquid detergent cannot be used for the main wash if the pre-wash has been selected.

Use powder detergent for the main wash.

Using detergent tablets or pods

Always put detergent tablets or pods directly in the drum with the laundry. They cannot be added via the detergent dispenser drawer.

Adding fabric softener

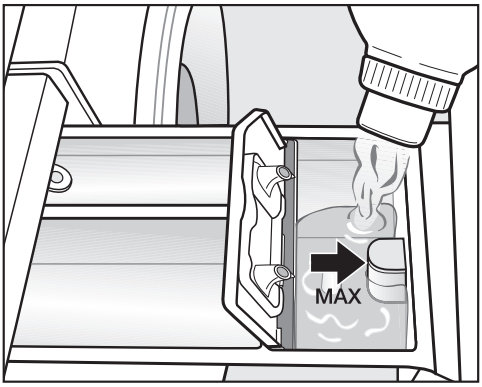

- Add the fabric softener or the liquid starch to the ❀ compartment. **Do not exceed the maximum level mark.**

This will be automatically dispensed in the final rinse. At the end of the wash programme a small amount of water remains in the ❀ compartment.

Starch can make the siphon tube sticky. If starching frequently, thoroughly clean the detergent drawer, especially the siphon, regularly.

Tips on dosing

Adjust the detergent dosage to the level of soiling of the laundry and the size of the load. Reduce the amount of detergent with smaller load sizes (e.g. reduce the amount of detergent by ⅓ when washing a half load).

Too little detergent results in:

- laundry not getting properly clean and with time it may become grey and hard to the touch.
- a possible build-up of mould in the washer-dryer.
- grease not being completely removed from the laundry.
- possible limescale deposits on the heater elements.

Too much detergent results in:

- poor wash, rinse, and spin results.
- a higher water consumption as an extra rinse cycle is automatically activated.
- a greater burden on the environment.

See "Washing - Detergent" for further information about detergents and how much to dispense.

Ⓒ CapDosing

If you selected CapDosing when setting the programme, detergent will be dispensed via the capsule for this wash programme.

Three different types of capsules are available:

❀ = Fabric care product (e.g. fabric softener, proofing agent)

= Additive (e.g. detergent enhancer)

= Detergent (for the main wash only)

Each capsule contains the correct amount for one wash cycle.

Capsules are available from shop.miele.com or from Miele Customer Service.

⚠ Capsules pose a health risk.
The ingredients of capsules can be hazardous to health if they are swallowed or come into contact with skin.
Keep capsules out of the reach of children.

Inserting a capsule

■ Open the detergent dispenser drawer.

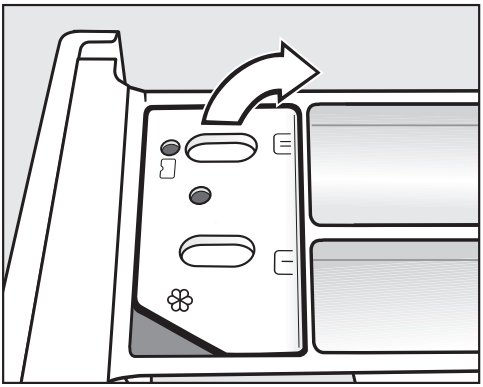

■ Open the lid of the ❀/▭ compartment.

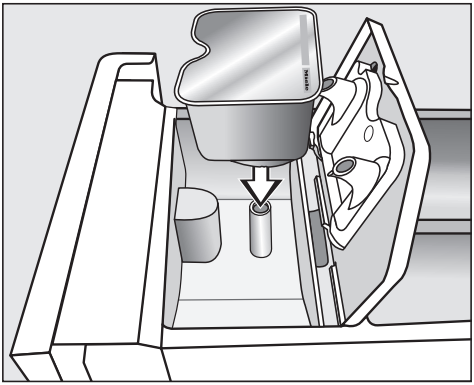

■ Press the capsule in firmly.

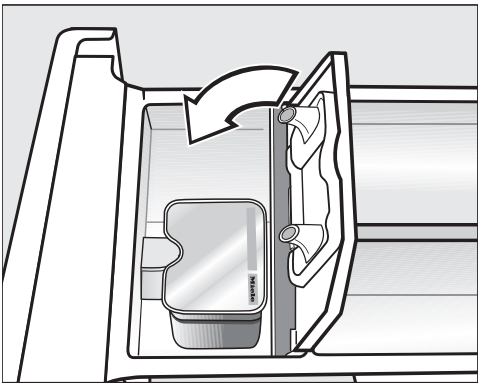

■ Close the lid and press it firmly shut.

■ Close the detergent dispenser drawer.

The capsule is opened by the act of inserting it in the detergent dispenser drawer. The contents can run out of the capsule if you then remove it from the detergent drawer before it is used.

In this case, dispose of the capsule and do not re-use it.

The wash programme will dispense the contents of the capsule at the correct time.

When using CapDosing, water intake to the ❀ compartment takes place solely via the capsule.

When using capsules, do not add fabric softener to the ❀ compartment.

■ Remove the empty capsule at the end of the wash programme.

For technical reasons, a small amount of water will remain in the capsule.

6. Starting the programme

The programme can be started when the *Start/Stop* sensor is flashing on and off.

Automatic safety lock

The washing machine has an automatic safety lock. The wash programme can only be started within 60 seconds of the last operating step. If the 60 seconds are exceeded or the door is opened and re-closed, no programme can be started. Note the message in the display and confirm with “OK”. You then have 60 seconds to restart the wash programme.

- Touch the *Start/Stop* sensor.

The door will lock and the programme will start.

The programme status will appear in the display.

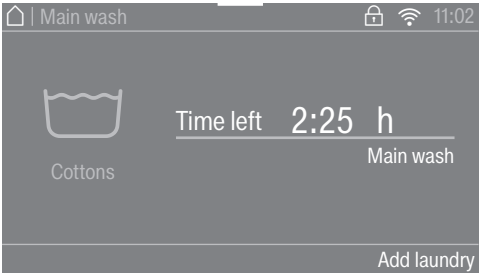

The washer-dryer will keep you updated on the programme status and the time remaining for the programme to run.

If a Timer period has been selected, this will count down in the display until the programme starts.

The drum lighting switches off once the programme has started.

Saving energy

After 10 minutes, the indicators will dim. The *Start/Stop* sensor flashes slowly.

You can reactivate the indicators:

- Touch the *Start/Stop* sensor (this does not have any effect on a programme that is running).

Adding laundry – AddLoad

Laundry can be added or removed if Add laundry is illuminated in the display.

- Touch the Add laundry sensor control.

The following will appear in the display:

Please wait

The programme will stop and the door will unlock.

- Open the door.
- Add or remove laundry.
- Close the door.
- Confirm the message in the display with *OK*.
- Touch the *Start/Stop* sensor control.

The programme will continue.

Please note:

Once a programme has started, the washer-dryer cannot recognise any adjustment to the load.

For this reason, if laundry is added or removed after the start of a programme, the machine will always complete the programme cycle assuming a full load.

Laundry cannot be added or removed if:

- The suds temperature is above 55°C
- The water inside the drum is above a certain level

7. End of the programme/ unloading laundry

At the end of the programme, the drum continues to turn at intervals for up to 30 minutes. The door will lock and the following will appear in the display: Finish/Anti-crease and Unlock with "Start/ Stop".

- Touch the *Start/Stop* sensor.

The door will unlock.

The door unlocks automatically at the end of the Anti-crease phase.

- Pull open the door.
- Remove the laundry.

Items left in the drum could discolour other items in the next wash or become discoloured themselves.

Remove all items from the drum.

- If applicable, remove the used capsule from the detergent dispenser drawer.
- Switch the washer-dryer off with the ⏻ sensor.

Useful tip: See "After each washing or drying programme".

Spin cycle

Programme	rpm
ECO 40-60	1600
Cottons	1600
Minimum iron	1200
QuickPower	1600
Delicates	900
Shirts	900
Woollens	1200
Denim	900
Outerwear	800
Proofing	1000
Curtains	600
Express 20	1200
Sportswear	1200
Dark garments	1200
Trainers	600
Silks	600
Down Items	1200
Pillows	1200
Cottons hygiene	1600
Automatic plus	1400
First wash	1200
Drain/Spin	1600
Separate rinse	1600
Starch	1600
Cottons	1600

Final spin speed in wash programmes

When a programme is selected, the optimum spin speed for this wash programme is shown in the display.

A faster spin speed can be selected for certain wash programmes.

The highest selectable spin speed is indicated in the table.

Omitting the final spin (Rinse hold)

- Select the Rinse hold Extra.

The laundry is not spun after the final rinse and remains in the rinse water. This helps prevent creasing if the laundry is not going to be removed from the drum immediately after the end of the programme.

To start the final spin:

The wash programme is set to the optimum spin speed. You can change the spin speed.

- Touch the Change spin speed sensor.
- Select the desired spin speed.
- Start the final spin with the *Start/Stop* sensor.

Ending the programme:

- Touch the Change spin speed sensor.
- Select the spin speed 0 rpm (no spin).
- Touch the *Start/Stop* sensor.

The water will be pumped away.

Interim spin

There is a spin cycle after the main wash and between the rinses. A reduction in the final spin speed will also reduce the interim spin speed as appropriate.

Deselecting the interim spin and the final spin

- Touch the Spin speed sensor.
- Select the spin speed 0 rpm (no spin).

After the last rinse cycle, the water will be pumped away and the Anti-crease phase will switch on.

In some programmes an additional rinse is introduced with this setting.

Programme chart

ECO 40-60		Max. load 8.0 kg
Items	Normally soiled cotton garments.	
Notes	- A laundry load consisting of mixed cottons that are intended for washing at 40°C or 60°C can be washed in the same wash cycle.	
Information for customers: You cannot normally select any temperatures or Extras for the ECO 40-60 wash programme. **Note for test institutes:** Energy labelling programme according to AS/NZS 2040.1 & AS/NZS 2040.2 (refer to www.energyrating.gov.au website for consumption data). The detergent must be added via the detergent dispenser drawer. The TwinDos system must be switched off during the tests.		
Cottons	**Cold to 90 °C**	**Max. load 8.0 kg**
Items	Cottons, linens or mixed fibre fabrics, e.g. table linen, towelling, underwear, T-shirts	
Tip	- Where particularly high levels of hygiene are required, please select a temperature of 60 °C or higher. - Use the 20 °C programme for lightly soiled cotton garments.	
Minimum iron	**Cold to 60°C**	**Max. load 3.5 kg**
Items	Synthetic, mixed fibre and easy care cotton.	
Notes	Reduce the spin speed for items which crease easily.	
QuickPower	**40°C to 60°C**	**Max. load 4.0 kg**
Items	Moderately soiled garments which are also suitable for washing in the *Cottons* programme.	
Notes	A special saturation process and wash rhythm ensure that the laundry is cleaned particularly quickly and thoroughly.	
Delicates	**Cold to 60°C**	**Max. load 2.0 kg**
Items	Delicate garments made from synthetic fibre, mixed fibre, rayon and viscose.	
Notes	For items which crease easily, deselect the spin.	

Shirts	**Cold to 60°C**	**Max. load 1.0 kg/2.0 kg**
Items	Shirts and blouses made of cotton and mixed fibre.	
Notes	- Pre-treat collars and cuffs if necessary. - Turn shirts and blouses inside out, do up buttons and turn collars and cuffs inwards. - Wash silk shirts and blouses in the *Silks* programme. - If the *Pre-ironing* Extra is switched on, the maximum load capacity is decreased to 1.0 kg.	
Woollens	**Cold to 40°C**	**Max. load 2.0 kg**
Items	Machine-washable or hand-washable wool or wool blend fabric. If the care label does not specify a temperature, wash using the cold setting.	
Notes	Reduce the spin speed for fabrics that crease easily.	
Denim	**Cold to 60°C**	**Max. load 3.0 kg**
Items	Black and dark garments made from cotton, mixed fibres and denim.	
Notes	- Wash denim inside-out. - Dark textiles often contain excess dye and should be washed separately several times before being included in a mixed load. Wash light and coloured items separately. - Close any zips, do up buttons etc. before washing.	
Outerwear	**Cold to 40°C**	**Max. load 2.5 kg**
Items	Functional textiles such as outdoor jackets and trousers made from membrane fabrics such as Gore-Tex®, SYMPATEX®, WINDSTOPPER®, etc.	
Notes	- Close any zips and Velcro fasteners before washing. - Do not use fabric softener. - If required, outdoor clothing can be reproofed in the *Proofing* programme. Reproofing after each wash cycle is not recommended.	

Proofing	**40 °C**	**Max. load 2.5 kg**
Items	For treating microfibre fabric, ski wear or table linen made from mainly synthetic fibres to provide a finish which is resistant to water and dirt.	
Notes	- The items should be freshly laundered and spun or dried before proofing. - For best results, the items should be heat-treated afterwards. This can be achieved by drying them in the tumble dryer or ironing them.	
Curtains	**Cold to 40°C**	**Max. load 2.0 kg**
Items	Curtains specified as machine-washable by the manufacturer.	
Notes	- Select the *Pre-wash* option to remove dust. - For curtains which crease easily, reduce the spin speed or deselect the spin. - Remove weights from curtains.	
Express	**Cold to 40°C**	**Max. load 3.5 kg**
Items	Cotton garments that have hardly been worn or are only very lightly soiled.	
Sportswear	**Cold to 60°C**	**Max. load 2.5 kg**
Items	Sportswear such as jersey shirts and leggings, and microfibre and fleece garments	
Notes	- Do not use fabric softener. - Observe the instructions on the care label.	
Dark garments	**Cold to 60°C**	**Max. load 3.0 kg**
Items	Black and dark items made of cotton or mixed fibres	
Notes	Wash inside out.	
Trainers	**Cold to 40°C**	**Max. 2 pairs**
Items	Sport shoes only (not leather shoes).	
Notes	- Observe the instructions on the care label. - Do not use fabric softener. - Coarse soiling should be brushed off first. - Close Velcro fasteners. - A pre-rinse without detergent is carried out automatically to remove dust.	

Silks	**Cold to 30°C**	**Max. load 1.0 kg**
Items	Silks and other hand-washable fabrics with no wool content, e.g. satin, lace and silk.	
Notes	Place stockings and bras in a laundry bag.	
Down Items	**Cold to 60°C**	**Max. load 2.0 kg**
Items	Jackets, sleeping bags, pillows and other down-filled items	
Notes	- Remove air from the items before washing to prevent an excessive build-up of foam. To do this, either push the items into a narrow laundry bag to compress them or tie the items together with a washable strap. - Observe the instructions on the care label.	
Pillows	**Cold to 60°C**	**2 pillows (40 x 80 cm) or 1 pillow (80 x 80 cm)**
Items	Synthetic filled washable pillows.	
Notes	- Remove air from the items before washing to prevent an excessive build-up of foam. To do this, either push the items into a narrow laundry bag to compress them or tie the items together with a washable strap. - Observe the instructions on the care label.	
Cottons hygiene	**60°C to 90°C**	**Max. load 8.0 kg**
Items	Cotton or linen with direct skin contact or for which special hygiene requirements apply, e.g. underwear, bed linen, encasing products.	
Notes	- Observe the instructions on the care label. - Temperature holding times are longer than in the Cottons programme. - Safe removal of viruses and bacteria in combination with the AllergoWash Extra and detergent dispensing via TwinDos with UltraPhase 1 and 2. Tested and confirmed by Albstadt-Sigmaringen University.	
Automatic plus	**Cold to 40°C**	**Max. load 4.0 kg**
Items	Mixed loads of garments suitable for the *Cottons* and *Minimum iron* programmes. Sort according to colour.	
Notes	The wash parameters (e.g. water level, wash rhythm and spin speed) are adjusted automatically in this programme to ensure the best possible care and wash result for each item.	

First wash	**Cold to 40°C**	**Max. load 2.0 kg**
Items	New items made of cotton, towelling and polyester fabric.	
Notes	Use this programme to wash any manufacturing residues out of new items.	
Drain/Spin		**Max. load 8.0 kg**
Notes	- Drain only: Select 0 rpm for the spin speed. - Make sure you select the appropriate spin speed.	
Separate rinse		**Max. load 8.0 kg**
Items	For rinsing hand-washed items.	
Notes	Reduce the spin speed for items which crease easily.	
Starch		**Max. load 8.0 kg**
Items	For starching table cloths, serviettes and workwear.	
Notes	- Reduce the spin speed for items which crease easily. - Laundry that is to be starched should be washed but not treated with fabric softener.	
Cottons	60°C / 40°C	**Max. load 8.0 kg**
Items	Moderately soiled cotton garments.	
Notes	- With 60°C, the wash temperature reached is below 60°C. The wash performance is the same as with the Cottons 60°C programme.	

Programme sequence

	Main wash		Rinses		Spin cycle
	Water level	Wash rhythm	Water level	Rinses	
ECO 40-60		A		2-3[2]	✓
Cottons		A		2–5[1,2,3]	✓
Minimum iron		B		2–4[2,3]	✓
QuickPower		A		2	✓
Delicates		C		2–4[2,3]	✓
Shirts		C		3–4[3]	✓
Woollens		E		2	✓
Denim		B		2–4[2,3]	✓
Outerwear		C		3–4[3]	✓
Proofing	–	B		1	✓
Curtains		C		3–4[3]	✓
Express 20		A		1	✓
Sportswear		C		2–3[3]	✓
Dark garments		B		3–5[2,3]	✓
Trainers[4]		D		2	✓
Silks		E		2	✓
Down items[5]		C		3–4[3]	✓
Pillows[5]		C		3–4[3]	✓
Cottons hygiene		A		3–5[2,3]	✓
Automatic plus		A B		2–4[2,3]	✓
First wash		B		2–3[3]	✓
Separate rinse	–	–		2	✓
Starch		B	–	–	✓

Please see the next page for a description of the symbols.

= low water level

= medium water level

= high water level

Ⓐ = intensive rhythm

Ⓑ = normal rhythm

Ⓒ = sensitive rhythm

Ⓓ = ultra sensitive rhythm

Ⓔ = handwash rhythm

✓ = carried out

– = not carried out

This washer-dryer has fully electronic controls with automatic load recognition. It takes in the right amount of water required for the programme depending on the amount of laundry and its absorbency rate.

The programme sequences outlined are based on the standard programme with a full load.

The washer-dryer's display continually shows which stage of the programme has been reached.

Special features in the programme sequence

Anti-crease

At the end of the programme, the drum continues to turn at intervals for up to 30 minutes to help prevent creasing.
Exception: There is no Anti-crease phase in the *Woollens* and *Silks* programme.
The drum door can be opened at any time during the anti-crease phase.

[1] If a temperature of 60°C or higher is selected, 2 rinses are carried out. If a temperature of less than 60°C is selected, 3 rinses are carried out.

[2] An additional rinse is carried out if:

- there is too much foam in the drum
- the final spin speed is less than 700 rpm

[3] An additional rinse is carried out if:

- the Extra rinse Extra has been selected

[4] Pre-wash:

- A pre-wash is carried out automatically to remove dust.

[5] Run-up to spin:

- A run-up to spin is carried out before the wash process begins to deflate down-filled items. Subsequent water intake for the main wash is through compartment II.

PowerWash

PowerWash is a washing technique developed by Miele which is activated in the following wash programmes:

- *ECO 40–60* (with small and medium load sizes)
- Cottons (with small and medium load sizes)
- *QuickPower*
- Minimum iron
- Shirts
- Automatic plus
- Delicates

How it works

Conventional washing techniques wash with more water than the laundry can absorb. This total volume of water needs to be heated.

The PowerWash washing technique only uses slightly more water than the laundry can absorb. The water which has not been absorbed by the laundry heats up the drum and the laundry and is sprayed into the laundry over and over again. This reduces the amount of energy used.

Activation

PowerWash is activated **automatically** in the programmes listed above.

PowerWash is deactivated if:

- the selected final spin speed is less than 600 rpm
- CapDosing has been selected for the main wash (💧, 💧)
- the wash temperature is higher than 60 °C
- Extras such as *Pre-wash* or *Water plus* have been selected
- a large load size is being washed in the *ECO 40-60* or *Cottons* programmes

Special features

- **Drenching phase**

  The washer-dryer will spin a few times at the beginning of the wash programme. During the spin cycle, the water discharged is sprayed back into the laundry in order to achieve optimum moisture penetration.

  The optimum water level is set at the end of the drenching phase. If necessary, the machine will pump water away and take in a little more fresh water.

- **Noises during the heating phase**

  Unusual bubbling noises can occur while the laundry and the drum are being heated.

Extras

You can supplement the wash programmes with Extras.

Not all Extras can be selected with every programme.

Selecting Extras

- Touch the Extras sensor.
- Select one or more Extras.

Not all Extras can be combined. Extras that cannot be combined are greyed out and cannot be selected.

- Confirm with the *OK* sensor.

The display will change to the standard menu for that wash programme.

SingleWash

For efficiently washing a very small load (< 1 kg) in a normal wash programme. The wash duration is reduced.

Please note the following advice:

- Use liquid detergent.
- Reduce the dosage to a maximum of 50% of the amount quoted for a ½ load.

Extra gentle

Drum rotation and wash duration are reduced. Lightly soiled fabrics are washed more gently.

Pre-ironing

In order to reduce creasing, the laundry undergoes a smoothing process at the end of the programme. For optimal smoothing reduce the maximum load by 50%. Small loads achieve a better result.

The garments must be suitable for drying in a tumble dryer and suitable for ironing .

The spin speed is reduced for some programmes.

Quick

For light soiling with no visible staining.

The duration of the main wash is reduced.

Water plus

The water level in the main wash and the rinse cycles is increased. A second rinse cycle is carried out in the Separate rinse programme.

You can select other functions for the Water plus Extra. These are described in "Settings".

Pre-wash

For laundry with large amounts of dirt, e.g. dust and sand.

Soak

For heavily soiled fabrics with protein stains.

A soak duration of between 30 minutes and 5 hours in 30-minute increments can be selected. See “Settings” for more information.

The factory default setting is 30 minutes.

Intensive

For hard-wearing laundry that is very heavily soiled. Cleaning efficiency is increased through more intense mechanical action and the application of more heat energy.

AllergoWash

This option should be used where high standards of hygiene are required. More energy is used to lengthen the temperature holding times. More water is used to increase rinsing efficiency. The items must be suitable for drying in a tumble dryer and suitable for ironing .

Extra quiet

This option reduces noise levels during the wash programme. Use this if you want to wash during quiet periods (for instance when children are sleeping). The machine will activate the *Rinse hold* option and not spin. The programme duration is longer.

Rinse hold

The laundry is not spun after the final rinse and remains in the rinse water. This helps prevent creasing if the laundry is not going to be removed from the drum immediately after the end of the programme.

Extra rinse

An additional rinse cycle can be activated to achieve a particularly good rinse result.

Detergent

Any detergent suitable for automatic front loading washing machines can be used with this appliance. Follow the manufacturer's instructions and dosage recommendations on the packaging.

The amount to dispense will depend on:

- the degree of soiling of the laundry
- the amount of laundry
- the water hardness

  Check with your local water supplier if you do not know the water hardness level in your area.

Water softeners

A water softener can be used to cut down on the use of detergents in areas with water hardness levels II and III. Dispense according to the amount specified on the packaging. First add detergent and then the water softener.

You can then use the recommended amount of detergent for water hardness level I.

Water hardness levels

Hardness range	Hardness level in mmol/l	German scale in °d
Soft (I)	0 – 1.5	0 – 8.4
Medium (II)	1.5 – 2.5	8.4 – 14
Hard (III)	above 2.5	above 14

Detergent dispensing aids

Use dispensing aids (e.g. balls) if these are supplied with the detergent, particularly when using liquid detergent.

Refill packs of detergent

When purchasing detergent, buy refill packs wherever possible. This helps reduce the amount of waste packaging.

Fabric softeners, liquid starch, starch

Fabric softeners make garments soft to handle and help prevent static cling when tumble drying.

Fabric shapers are synthetic starches and give an even stiffer hold.

Starch stiffens and gives body to fabric.

Using fabric softener, liquid starch or starch separately

Prepare the starch in accordance with the manufacturer's instructions on the packaging.

Useful tip: When adding fabric softener, activate the Water plus Extra.

Dispensing via the detergent dispenser drawer

- Add fabric softener to the ❀ compartment or insert the appropriate capsule.
- Add liquid starch to the ❀ compartment and powder or viscous starch to the ⊔ compartment.
- Select the Separate rinse or Starch programme.
- Change the spin speed if necessary.
- If using a capsule, touch the CapDosing sensor and activate the Cap.
- Touch the *Start/Stop* sensor.

TwinDos dispensing

One of the automatic dispensing containers must be filled with fabric softener.

- Select the Separate rinse or Starch programme.
- Change the spin speed if necessary.
- Touch the TwinDos sensor.
- Touch the On sensor to activate TwinDos.
- Touch the *Start/Stop* sensor.

Colour run and dye removers/dyes

⚠ Damage due to colour run/dye removers.
Colour run and dye removers can cause corrosion in the washer-dryer.
Do not use colour run or dye removers in this washer-dryer.

Dyes suitable for use in domestic washing machines can be used. However, please note that the salt used in the dyeing process can cause corrosion to stainless steel components in the machine if you use dye frequently. Always observe the manufacturer's instructions carefully.

When using the machine to dye fabric it is essential to select the *Water plus* Extra.

Miele detergents

Miele detergents have been specially designed for everyday use in Miele washing machines. See “Detergents and care products” for more information about these detergents.

	Miele UltraPhase 1 and 2	Miele capsules		
ECO 40-60	✓	–	✓	✓
Cottons	✓	–	✓	✓
Minimum iron	✓	–	✓	✓
QuickPower	✓	–	–	–
Delicates	✓	✓	✓	–
Shirts/Blouses	✓	–	✓	✓
Woollens	–	✓	–	–
Denim	✓	–	✓	–
Outerwear	–	✓	–	–
Proofing	–	–	✓	–
Curtains	✓	–	–	✓
Express 20	✓	–	✓	–
Sportswear	–	✓	–	–
Dark garments	✓	✓	✓	–
Trainers	✓	–	–	✓
Silks	–	✓	–	–
Down-filled items	–	✓	–	–
Pillows	–	✓	–	–
Cottons hygiene	✓	–	✓	✓
Automatic plus	✓	–	✓	✓
New clothes	✓	–	✓	–
Separate rinse	–	–	✓	–

✓ Recommended

– Not recommended

Special-purpose detergent (e.g. WoolCare)

Fabric care product (e.g. fabric softener)

Additive (e.g. Caps Booster)

The recommendations apply to the temperature ranges given in the section "Washing" in the Programme chart.

	Universal	Colour	Delicates and woollens	Special
	detergent			
ECO 40-60	✓	✓	–	–
Cottons	✓	✓	–	–
Minimum iron	–	✓	–	–
QuickPower	✓	✓	–	–
Delicates	–	–	✓	–
Shirts	✓	✓	–	–
Woollens	–	–	✓	✓
Denim	–	✓[1]	–	✓
Outerwear	–	–	✓	✓
Proofing	–	–	–	✓
Curtains	✓[2]	–	–	✓
Express 20	–	✓[1]	–	–
Sportswear	–	–	✓	✓
Dark garments	–	✓[1]	–	✓
Trainers	–	✓[1]	–	–
Silks	–	–	✓	✓
Down Items	–	–	✓[1]	✓
Pillows	–	–	✓[1]	✓
Cottons hygiene	✓	✓	–	–
Automatic plus	–	✓	–	–
First wash	–	✓	–	–

✓ recommended

– not recommended

[1] Liquid detergent

[2] Powder detergent

Separate drying

The separate drying programme should be run if the load in the wash programme is greater than the maximum load permitted for drying, or if you only want to dry part of the load that was washed.

1. Preparing the laundry

Sorting the laundry

■ Sort the laundry according to type of fibre/weave, size, garment care label symbol, and the drying level required.

This will help you to achieve an even drying result.

■ Before drying, check the drying symbol on the care label.

If there is no care label, the article should only be tumble dried in a programme specially designed for it.

Tips on drying

- Do not load the drum with items that are still soaking wet. Spin the laundry for at least 30 seconds after washing.
- Woollens and wool blends are susceptible to becoming matted or shrinking. Only use the *Woollens* programme for these textiles.
- Pure linen should only be tumble dried if it is specified as suitable on the care label. The surface of the fabric may otherwise become rough.
- Loopknit garments (e.g. T-Shirts, underwear) have a tendency to shrink after the first wash. Do not overdry these fabrics to prevent further shrinking. When buying loopknit garments, it is advisable to take their shrinkage potential into account.
- Starched laundry can be tumble dried. To achieve the usual finish, double the amount of starch should be used.
- New dark coloured garments should be washed and dried separately from light coloured garments. The colour of dark garments can run or fluff from garments of other colours may settle on them.
- Observe the maximum loads given for the drying programmes in the Programme chart.
  The drying result and amount of creasing depend on the size of the load. The smaller the load in the dryer the better the result. Therefore, if you reduce the load, you will achieve a more even drying result with less creasing.

2. Selecting a programme

Switching the washer-dryer on

■ Press the ⏻ sensor.

The interior drum lighting will come on.

The drum lighting will go out automatically after a few minutes.

Useful tip: To switch the drum lighting on again, open the pull-down menu from the overview menu and then touch the ☼ sensor.

The main menu will then appear in the display.

Selecting a programme

■ Touch the Drying sensor.

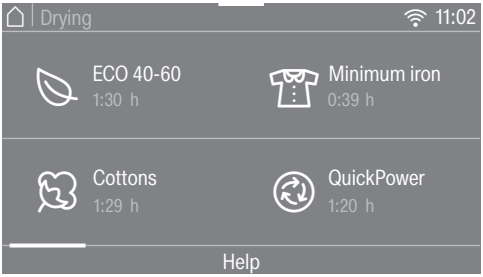

■ Scroll to the right of the display until the programme you want appears.

■ Touch the sensor for that programme.

The display will then change to the standard menu for the programme.

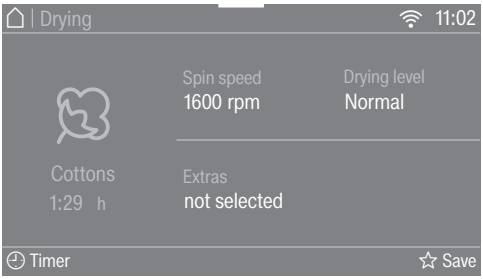

There are 3 other ways to select a programme:

- Saved favourite programmes
- The Washing/Drying assistant
- Miele MobileStart

3. Selecting programme settings

Selecting a thermospin spin speed

The preset spin speed for the thermospin can be changed if required.

■ Touch the Spin speed sensor.

■ Select the desired spin speed.

The display will change to the standard menu for that drying programme.

Selecting the drying level

The preset drying level for a programme can be changed if required.

■ Touch the Drying level sensor.

■ Select the desired drying level.

The display will then change to the standard menu for the programme.

Selecting Extras

You can supplement programmes with Extras.

- Touch the Extras sensor.
- Select one or more Extras.

Not all Extras can be combined. Extras that cannot be combined are greyed out and cannot be selected.

- Confirm with the *OK* sensor.

The display will then change to the standard menu for the programme.

See “Drying – Extras” for more information.

◷ Timer

You can use the Timer to set the finish time or the start time for a programme.

See “Timer/SmartStart” for further information.

4. Loading the drum

Opening the door

- Reach under the door grip and pull the door open.

Check the drum for pets or foreign objects before loading it with laundry.

- Load the laundry loosely in the drum.

Overloading places a strain on the textiles and affects drying results.

Observe the maximum loads listed in the Programme chart.

Closing the door

- Make sure that no items are caught between the door and the seal.
- Shut the door with a gentle swing.

Detergent dispensing aids, e.g. plastic dispenser balls, can melt during the drying programme and cause damage to the machine and the laundry.

These dispensing aids must be removed from the laundry before drying.

The mains water tap must be kept open for drying.

Useful tip: The maximum load size for the programme selected will appear in the pull-down menu.

5. Starting the programme

The programme can be started when the *Start/Stop* sensor is flashing on and off.

Automatic safety lock

The washing machine has an automatic safety lock. The wash programme can only be started within 60 seconds of the last operating step. If the 60 seconds are exceeded or the door is opened and re-closed, no programme can be started. Note the message in the display and confirm with “OK”. You then have 60 seconds to restart the wash programme.

- Touch the *Start/Stop* sensor.

The door will lock and the programme will start.

The programme status will appear in the display.

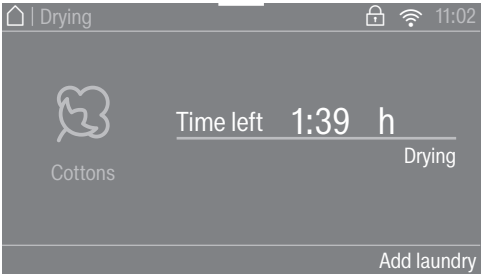

The washer-dryer will keep you updated on the programme stage and the remaining programme running time.

If a Timer period has been selected, this will count down in the display until the programme starts.

The drum lighting switches off once the programme has started.

Saving energy

After 10 minutes, the indicators will dim. The *Start/Stop* sensor flashes slowly.

You can reactivate the indicators:

- Touch the *Start/Stop* sensor (this does not have any effect on a programme that is running).

Adding laundry

Laundry can be added or removed if Add laundry is illuminated in the display.

- Touch the Add laundry sensor.

The following will appear in the display:

Please wait

The programme will stop and the door will unlock.

⚠ Risk of burning when touching hot laundry in the drum.
You could burn yourself.

- Open the door.
- Add or remove laundry.
- Close the door.
- Confirm the message in the display with *OK*.
- Touch the *Start/Stop* sensor.

The programme will continue.

Exceptions to adding laundry

In some cases, e.g. during the cooling phase or in the *Proofing* programme, you cannot add laundry.

In exceptional cases, the door can be opened while the programme is running.

Please note:

Once a programme has started, the washer-dryer cannot recognise any adjustment to the load.

For this reason, if laundry is added or removed after the start of a programme, the machine will always complete the programme cycle assuming a full load.

6. End of the programme/ unloading laundry

At the end of the programme, the drum continues to turn at intervals for up to 150 minutes. The door will lock and the following will appear in the display: Finish/Anti-crease and Unlock with "Start/ Stop".

- Touch the *Start/Stop* sensor.

The door will unlock.

If you unload the laundry during the Anti-crease phase, heat can build up.

Spread the laundry out to cool it down.

The door unlocks automatically at the end of the Anti-crease phase.

- Pull open the door.
- Remove the laundry.

Items left in the dryer could be damaged by overdrying when the dryer is used the next time.

Remove all items from the drum.

Useful tip: See "After each washing or drying programme".

Programme chart

* Weights are based on the weight of dry laundry.

[1] For further information on *Timed drying*, see the end of the Programme chart.

ECO 40-60	**Max. load 4.0 kg***
Normal	
	Cotton textiles: T-shirts, underwear, baby clothes, workwear, jackets, covers, aprons, overalls, hand towels, bath towels, bathrobes and flannelette/bed linen.
Energy labelling programme according to AS/NZS 2442.1 & AS/NZS 2442.2 (refer to http://www.energyrating.gov.au website for consumption data).	
Cottons	**Max. load 4.0 kg***
Normal plus, Normal	
Items	Single and multi-layered cotton fabric such as towelling, T-shirts, underwear, baby clothes, workwear, jackets, covers, aprons, overalls, flannelette bed linen, towels and bath robes
Hand iron, Machine iron, Timed drying[1]	
Items	Cotton or linen fabric requiring further processing, e.g. table linen, bed linen, starched laundry.
Tip	To prevent laundry from drying out, it should be rolled up until you are ready for ironing.
Minimum iron	**Max. load 3.5 kg***
Normal plus, Normal, Hand iron, Timed drying[1]	
Items	Minimum iron items made of cotton, synthetic or mixed fibre, e.g. workwear, overalls, jumpers, dresses, trousers, table linen, tights.
QuickPower	**Max. load 4.0 kg***
Normal plus, Normal, Hand iron, Timed drying[1]	
Items	Garments suitable for the *Cottons* programme
Note	The programme running time for this programme is particularly short when washing and drying **moderately** soiled laundry in a continuous sequence.

Drying

Delicates	**Max. load 1.0 kg***
Normal plus, Normal, Hand iron, Timed drying[1]	
Items	Delicate items with the ⊡ symbol on the care label made of synthetic fibres, easy care cotton or blended fabric, e.g. shirts, blouses, lingerie and evening wear with sequins and beading.
Notes	Reducing the load will reduce creasing.
Shirts	**Max. load 1.0 kg***
Normal plus, Normal, Hand iron, Timed drying[1]	
Items	Shirts and blouses.
Notes	- Turn shirts and blouses inside out, do up buttons and turn collars and cuffs inwards. - The laundry is dampened before the programme starts to help reduce creasing.
Woollens	**Max. load 2.0 kg***
3 minutes	
Items	Woollen garments and textiles containing wool blends, e.g. pullovers, cardigans, stockings.
Notes	- Wool and wool blend items are only fluffed up; they are not dried completely. - Remove garments as soon as the programme has finished.
Denim	**Max. load 3.0 kg***
Normal plus, Normal, Hand iron, Timed drying[1]	
Items	All denim garments, e.g. jeans, jackets, skirts, shirts
Freshen up	**Max. load 1.0 kg***
Normal, Hand iron, Timed drying[1]	
Items	Clean dry garments and garments that have been worn briefly and are not soiled.
Notes	The laundry is dampened before the programme starts to help reduce creasing. - **Normal**: for garments that are required immediately. - **Hand iron**: for garments that are to be ironed or hung out to dry completely on a coat hanger.
Notes	Creasing **increases** the larger the load and the longer the drying time.

Pre-ironing only	**Max. load 2.0 kg***
Hand iron, Timed drying[1]	
Items	Reduces the amount of creasing in damp, freshly washed and spun cotton or linen outerwear The outerwear must be suitable for drying in a tumble dryer and suitable for ironing.
Tip	Remove garments as soon as the programme has finished and hang them up on a coat hanger.
Note	Not suitable for garments made of wool or wool blend fabric.
Outerwear	**Max. load 2.5 kg***
Normal plus, Normal, Hand iron, Timed drying[1]	
Items	Outerwear which is suitable for drying in a tumble dryer.
Proofing	**Max. load 2.5 kg***
Normal	
Items	For thermally fixing textiles which are suitable for tumble drying and have been treated with a proofing agent.
Notes	- This programme includes a proofing fixing phase. - Only use proofing agents which are stated by the manufacturer as being “suitable for use on membrane textiles”. These agents contain fluorochemical compounds. - Do not dry items which have been treated with proofing agents containing paraffin. Fire hazard!
Express 20	**Max. load 3.5 kg***
Normal plus, Normal, Hand iron, Timed drying[1]	
Items	Garments suitable for the Cottons programme.
Notes	The programme duration is particularly short when washing and drying **lightly** soiled laundry in a continuous sequence.
Sportswear	**Max. load 2.5 kg***
Normal plus, Normal, Hand iron, Timed drying[1]	
Items	Sportswear which is suitable for drying in a tumble dryer.
Dark garments	**Max. load 3.0 kg***
Normal plus, Normal, Hand iron, Timed drying[1]	
Items	Black and dark garments made from cotton or mixed fibres

Drying

Trainers	**Max. 2 pairs**
Timed drying[1]	
Items	Sport shoes that are specified as suitable for tumble drying by their manufacturer.
Notes	Insoles should be removed and placed in the drum with the shoes.
Notes	The drum does not rotate.
Silks	**Max. load 1.0 kg***
8 minutes	
Items	Silk garments which are suitable for drying in a tumble dryer, e.g. blouses and shirts.
Notes	- For reduced creasing. - Items are not dried completely. - Remove garments as soon as the programme has finished.
Down Items	**Max. load 2.0 kg***
Timed drying[1]	
Items	Jackets, sleeping bags, pillows and other down-filled items that are suitable for tumble drying.
Notes	Check the items as you are drying them to find the optimal time.
Pillows	**2 pillows (40 x 80 cm) or 1 pillow (80 x 80 cm)**
Timed drying[1]	
Items	Pillows with synthetic filling that are suitable for tumble drying.
Notes	Pillows can still feel damp after being dried. You can use this programme several times until the pillow feels dry.
Cottons hygiene	**Max. load 4.0 kg***
Normal, **Timed drying**[1]	
Items	Cottons and linen fabrics, which are in direct contact with the skin, e.g. underwear, nappies, towelling, bed linen, pillow and mattress covers
Note	The laundry will feel drier because of the longer temperature holding time.
Automatic plus	**Max. load 3.0 kg***
Normal plus, Normal, Hand iron, Timed drying[1]	
Items	Mixed loads of garments suitable for the *Cottons* and *Minimum iron* programmes.

First wash	**Max. load 2.0 kg***
Normal plus, Normal, Hand iron, Timed drying[1]	
Textiles	New cotton, towelling or polyester textiles.
Warm air	**Max. load 4.0 kg***
Timed drying[1]	
Items	- Multi-layered items whose layers have different drying characteristics, e.g. jackets, pillows, sleeping bags and other voluminous items. - For drying and airing individual items.
Notes	Do not select the longest drying time to start with. Check the items as you are drying them to find the optimal time.
Cool air	**Max. load 4.0 kg***
Timed drying[1]	
Items	Any items which only need airing.
Cottons	**Max. load 4.0 kg***
Normal	
Items	Cotton items such as those described under *Cottons Normal* with normal residual moisture.

[1] Timed drying

Timed drying is particularly suitable for small loads or when you want to dry individual items. The items are dried with warm air (a drying time between 20 minutes and 2 hours can be selected). The drying temperature is adjusted to match the programme selected. Do not select the longest drying time to start with. Check the items as you are drying them to find the optimal time.

Thermospin

A thermospin is carried out in some drying programmes to reduce energy consumption.

Thermospin is not carried out if timed drying is selected.

The maximum spin speed for the thermospin is the maximum permitted spin speed for the appropriate wash programme.

The thermospin can be reduced to 800 rpm.

Extras

You can select Extras to augment drying programmes.

Not all Extras can be combined. Extras that cannot be combined are greyed out and cannot be selected.

Pre-ironing

In order to reduce creasing, the laundry undergoes a smoothing process at the end of the programme. The spin speed for the thermospin is reduced. For optimal smoothing reduce the maximum load by 50%.

The garments must be suitable for drying in a tumble dryer and suitable for ironing .

SingleDry

For efficiently drying a very small load size (< 1 kg) in a normal drying programme.

A drying time is preset. You can change the drying time.

Some items may still be damp after drying, depending on the type of laundry. Select a longer duration next time.

Gentle tumble

Delicate textiles such as acrylics are dried gently (care label symbol).

In some programmes the programme running time will increase when *Gentle tumble* is selected because of the lower temperature.

Extra quiet

If you want to dry clothes in quiet periods, the noise level of the washer-dryer can be reduced.

- The buzzer is deactivated.
- Thermospin is limited to a maximum of 800 rpm.

Washing and drying in one continuous sequence

It is advisable to wash and dry in a continuous sequence when the amount of laundry to be washed does not exceed the amount to be dried, and the amount to be dried does not exceed the permitted dry weight for the programme.

It is essential to read the sections “Washing” and “Drying”.

1. Preparing the laundry

- Empty all pockets.
- Sort the laundry according to colour and type of fibre/weave.
- Check the symbols on the care labels.

2. Selecting a programme

- Touch the Washing + Drying sensor.
- Scroll to the right of the display until the programme you want appears.
- Touch the sensor for that programme.

The display will then change to the standard menu for the programme.

There are 3 other ways to select a programme:

- Saved favourite programmes
- The Washing/Drying assistant
- Miele MobileStart

3. Loading the drum

- Open the door.

Check the drum for pets or foreign objects before loading it with laundry.

- Unfold the laundry and load loosely into the drum.

Detergent dispensing aids, e.g. plastic dispenser balls, can melt during the drying programme and cause damage to the machine and the laundry.

These dispensing aids must be removed from the laundry before drying.

- Close the door.

4. Selecting programme settings

- Select the desired temperature, spin speed and drying level.

The minimum spin speed cannot be lower than 800 rpm.
For some programmes the spin speed cannot be changed.

- Select TwinDos or CapDosing if desired.
- Select further Extras or stains as required.

With the thermospin the spin speed displayed for the wash cycle is used.
If *Extra quiet* is selected the maximum spin speed used is 900 rpm.

Thermospin is not carried out if timed drying is selected.

- Select a Timer if required.

5. Adding detergent

- Dispense detergent with TwinDos, CapDosing or via the detergent drawer.

6. Starting/Ending the programme

- Touch the flashing *Start/Stop* sensor.

The door will lock.

The programme will start.

The Anti-crease phase will start at the end of the programme.

The door remains locked during the Anti-crease phase.

- Touch the *Start/Stop* sensor.

The door will unlock.

If you unload the laundry during the Anti-crease phase, heat can build up.
Spread the laundry out to cool it down.

The door unlocks automatically at the end of the Anti-crease phase.

- Pull the door open and unload the drum.

See “After each washing or drying programme”.

- Open the drum door **fully**.

⚠ Risk of burning due to hot metal.
The metal cap located on the inside of the door glass will be hot after drying.
Do not touch the metal cap.

- Remove the laundry.

Laundry left in the drum could shrink, discolour or be damaged in the next washing or drying programme.
Check that all items have been removed from the drum.

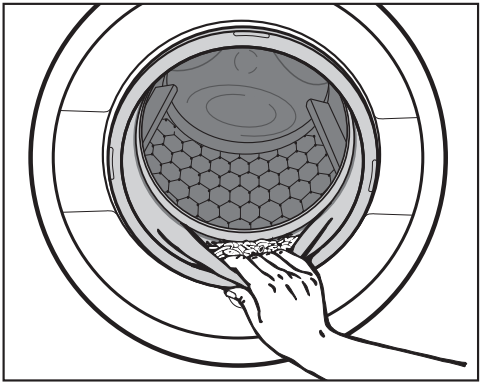

- Check the folds in the door seal for any small articles, e.g. buttons, which might be lodged there.
- After drying, remove any fluff from around the door seal and the porthole glass.

Useful tip: For safety reasons, close the door when the machine is not in use. Otherwise there is a danger of objects being placed inadvertently in the drum. If these remain unnoticed and were washed in the next load, they could damage the laundry. An open door is also a danger to pets and children.

- Switch the washer-dryer off with the ⏻ sensor.

Useful tip: Leave the detergent dispenser drawer slightly open to allow it to dry.

Use the Rinse out fluff programme to prevent fluff from collecting in the drum and suds container, particularly after drying.

Changing the programme (safety lock)

It is not possible to change the programme, the temperature, the spin speed or the selected Extras after the programme has started. This prevents the appliance being operated unintentionally, e.g. by children.

If the washer-dryer is switched off during active programme operation, the standby function does not switch the washer-dryer off completely after 15 minutes. Safety functions continue to be active because there may still be water inside the drum.

Cancelling a programme

You can cancel a programme at any time after it has started.

■ Touch the *Start/Stop* sensor.

The following will appear in the display:

ℹ Cancel the programme?

■ Select Yes.

- During washing

The suds will be pumped away and the programme is cancelled.

- During drying

The laundry will be cooled down before the door can be opened.

Removing the laundry

■ Wait until the 🔒 symbol in the display goes out and the door is unlocked.

■ Pull the door open and unload the drum.

Selecting another programme

■ Close the door.

■ Select the required programme.

■ Add detergent to the detergent dispenser drawer, if necessary.

■ Touch the *Start/Stop* sensor.

The programme will start.

Interrupting a programme

■ Switch the washer-dryer off with the ⏻ sensor.

■ To continue the programme, switch the washer-dryer back on with the ⏻ sensor.

⚠ Danger of overheating due to hot laundry.

Hot laundry can ignite.

Never switch the washer-dryer off during a drying programme.

If you absolutely must interrupt the programme, remove all items immediately and spread them out to cool down.

Creating a favourite programme

You can save your own customised wash programmes under names of your choice.

Option 1

- Scroll through the main menu until Favourites appears.
- Touch the Favourites sensor.

The display will change to show the Favourites menu.

Touch the Create sensor.

The display will change to show the Create Favourites menu.

- Select Washing, Drying or Washing + Drying.
- Select the required programme.
- Select all the programme settings you want.
- Then select Save.
- Enter a name.

Option 2

You can save a programme which has been selected as a Favourite programme before you start it.

- Before the programme starts, touch the Save sensor.
- Enter a name.

If 12 Favourites have already been saved, the Create or Save sensor will not be visible. Delete an existing Favourite if you wish to create a new one.

Entering a name

It is best to select short, memorable names.

- Touch the letters or characters you want.
- Confirm with the Save sensor.

The programme will then be saved to the Favourites programme list.

Changing a Favourite programme

You can rename, delete or move a Favourite programme.

- Select Favourites from the main menu.
- Touch the Favourite programme that you wish to change until the Context menu opens.
- Select Rename, Delete or Move.

Washing/Drying assistant

The assistant helps you with washing and drying loads consisting of items with different care labels. The appliance will use the list of items to put together a suitable programme.

- Scroll through the main menu until Wash/Drying assistant appears.
- Touch the Wash/Drying assistant sensor.

The display will change to show the Purpose menu.

- Select a goal, e.g. Washing or Washing + Drying.

A list of items will appear.

- Touch the appropriate sensor for your item of laundry.

The item selected will be highlighted orange.

You can select several items. Articles that cannot be combined are not available for selection.

- Confirm with the OK sensor.
- Follow the instructions in the display.

A summary of the selected parameters will then appear in the display.

- Confirm with the OK sensor or select Change if you would like to make any changes.

The programme which has been tailored to your laundry is ready to start.

Helpful tips are sometimes displayed before the start of the programme.

Useful tip: You can add individual programme settings, e.g. Extras, before you start the programme.

Timer

The Timer can be used to set the time at which a programme starts or finishes. The programme start can be delayed by up to 24 hours.

Setting the Timer

- Touch the Timer sensor.
- Select the Finish at or Start at option.
- Set the hours and the minutes and confirm your entry with the *OK* sensor.

Altering the Timer

The selected timer can be changed before the programme starts.

- Touch the or sensor.
- Change the time set and confirm with the *OK* sensor.

Deleting the Timer

The selected timer can be deleted before the programme starts.

- Touch the or sensor.

The selected time for the timer appears in the display.

- Touch the Delete sensor.
- Confirm with the *OK* sensor.

The selected time for the timer is now deleted.

Starting the Timer

- Touch the *Start/Stop* sensor.

The door will lock and the time remaining until the programme starts will appear in the display.

After the programme has started, the selected time for the timer can only be changed or cancelled by interrupting the programme.

The programme can be started immediately at any time.

- Touch the Start immediately sensor.

SmartStart

(only functional in selected countries)

The SmartStart function lets you define a time period during which your washer-dryer will start automatically based on an external signal.

This function is active when the SmartGrid setting is switched on.

The timeframe can be defined between 1 minute and 24 hours. During this period, the washer-dryer waits for the signal. If no signal is sent during the defined period, the washer-dryer starts the programme.

Setting the timeframe

If you have activated SmartGrid in the settings, SmartStart by and SmartFinish by will appear in the display instead of Start at and Finish at when you touch the ⏲ Timer sensor. See “Settings – SmartGrid” for more information.

The procedure for setting this is the same as for setting the time for the timer.

- Set the time you want and confirm with the *OK* sensor.
- Touch the *Start/Stop* sensor to start the programme with SmartStart.

The selected programme will start automatically, as soon as the energy provider has sent the signal, or the latest calculated start time has been reached.

The procedure for changing or deleting the *SmartStart* function is the same as described in “Changing the timer” and “Deleting the timer”.

Preparing the cartridge

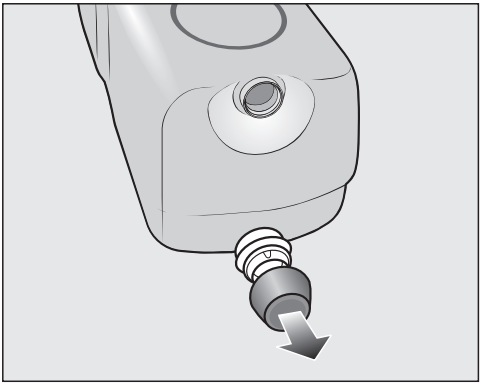

■ Remove the cover cap from the cartridge.

or

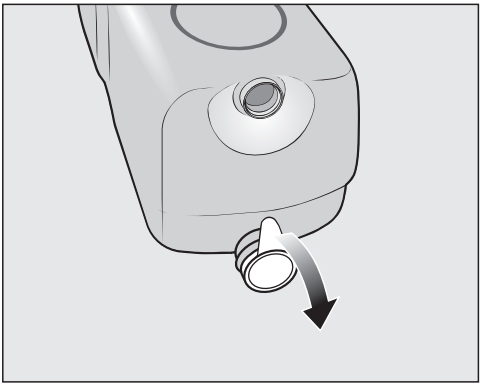

■ Remove the film seal from the cartridge completely.

> ⚠ Risk of damage from film seal
> If the film seal is not removed completely, leaks can occur in the TwinDos system.
> Remove the film seal from the suction port on the cartridge completely before inserting the new cartridge.

Replacing the cartridge

Make sure the washer-dryer is switched on before replacing the detergent cartridge. This will ensure that the counter is set to 0 and the fill level indicator is correct.

■ Switch the washer-dryer on.

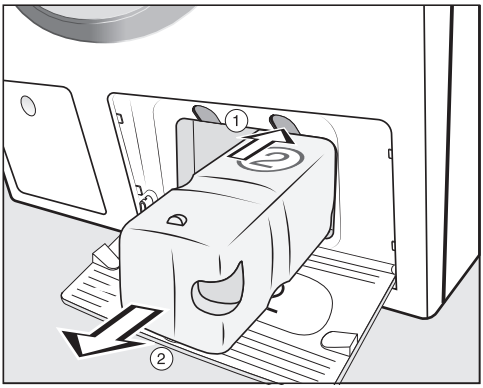

① To release the lock, press the yellow button above the cartridge.

② Pull out the cartridge.

■ Insert a new cartridge.

■ Confirm the messages in the display.

The counter is set to 0.

Starting maintenance programmes

The washer-dryer has 3 maintenance programmes.

The tap must be open when a maintenance programme is started.

- Scroll through the main menu until Maintenance appears.
- Touch the Maintenance sensor control.

Clean "TwinDos"

Clean "TwinDos" is a programme for cleaning the TwinDos system. The programme cleans the hoses inside the washer-dryer.

⚠ Damage resulting from dried laundry detergent.
If the system has not been used for a long time (more than 2 months), detergent in the hoses can become viscous or dry out. The hoses can become blocked and would then need to be cleaned by a Customer Service technician.
Clean the TwinDos system.

To clean the system, you need either a TwinDos Care cleaning cartridge or a refill container, both of which are available to purchase from shop.miele.com.

Starting a programme

- Select Clean "TwinDos".
- Touch the sensor for the container you want to clean.
- Confirm Start Maintenance programme? with the Yes sensor.
- Follow the instructions in the display.

The hoses will now be cleaned and the TwinDos system can be used again at any time.

Cleaning the compartment

Detergent residue can cause clogging.

- Use a damp cloth to clean the compartment interior when you change the cartridge or container.

Clean machine

With frequent washing at low temperatures there is a danger of a build-up of bacteria in the washer-dryer.

Cleaning the washer-dryer will significantly reduce bacteria, mould and biofilm and prevent the build-up of unpleasant odours.

Start the Clean machine programme at the latest when the *Hygiene info* message appears in the display.

Useful tip: Optimum results can be achieved by using the Miele IntenseClean machine cleaner. Alternatively, a universal powder detergent can be used.

Starting a programme

- Select Clean machine.
- Dispense the machine cleaner or universal detergent directly in the drum.
- Do **not** load any laundry. The drum must be empty for the cleaning process.
- Touch the *Start/Stop* sensor.

The programme will start.

Rinse out fluff

During drying, fluff is developed and can collect in the drum and suds container. Run the *Rinse out fluff* programme before the machine is used again so that fluff cannot be deposited on the next load or cause a blockage.

The *Rinse out fluff* programme must not be used for rinsing laundry. Ensure there are no items of laundry in the drum before starting the programme.

Starting a programme

- Select Rinse out fluff.

Do not use detergent.

- Touch the *Start/Stop* sensor.

Any fluff will be rinsed away within a few minutes.

- If necessary wipe any remaining fluff off the door seal and door glass.
- Switch the washer-dryer off.

Cleaning the external casing and fascia panel

⚠ Risk of electric shock.
The mains voltage is applied to the washer-dryer even if it is switched off.
Disconnect the machine from the electricity supply before cleaning or maintenance.

⚠ Risk of damage due to ingress of water.
The pressure of a water jet can cause water to get into the washer-dryer, resulting in damage to components.
Do not spray the washer-dryer with a water jet.

⚠ Damage caused by cleaning agents.
Solvent-based cleaning agents, abrasive cleaners, glass cleaners or multi-purpose cleaning agents can cause damage to plastic surfaces and other parts.
Do not use these cleaning agents.

- Clean the casing and control panel with a mild cleaning agent or soap and water and dry both with a soft cloth.
- The drum can be cleaned using a suitable stainless steel cleaning agent following the manufacturer's instructions on the packaging.

Cleaning the detergent dispenser drawer

Washing at low temperatures and the use of liquid detergent can lead to a build-up of mould and bacteria in the detergent dispenser drawer.

- Clean the entire drawer at regular intervals for hygiene reasons, even if you are using the TwinDos system exclusively.

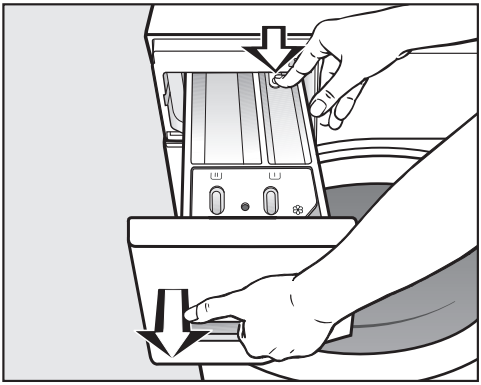

- Pull out the detergent dispenser drawer until a resistance is felt. Press down the release button and at the same time pull the drawer right out of the machine.
- Clean the detergent drawer with warm water.

Cleaning the siphon and the channel

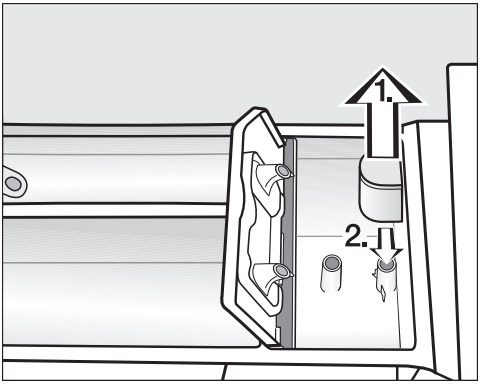

- Pull the siphon out of the ❀ compartment and clean it under warm running water.
- Clean the siphon tube in the same way.
- Refit the siphon.

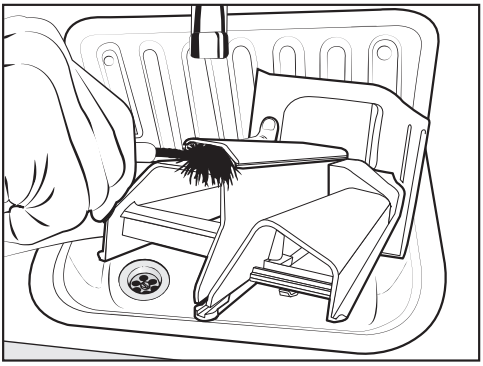

- Clean the fabric softener channel using a brush and warm water.

Liquid starch results in clogging. If clogged, the siphon in the ❀/⌐ compartment will not work and the compartment can overflow.

Clean the siphon particularly thoroughly after using liquid starch a few times.

Cleaning the detergent dispenser drawer housing

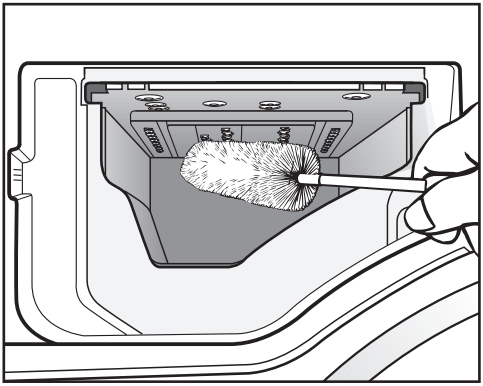

- Use a bottle brush to remove detergent residues and limescale from the jets inside the detergent dispenser drawer housing.
- Replace the detergent dispenser drawer.

Useful tip: Leave the detergent dispenser drawer slightly open to allow it to dry.

Cleaning the porthole glass

- Clean the inside of the porthole glass from time to time and the metal cap inside the porthole glass with a suitable mild cleaning agent or with soapy water.
- Dry both with a soft cloth.

Cleaning the water inlet filter

The washer-dryer has a filter to protect the water inlet valve. The filter at the open end of the water inlet hose should be checked approximately every 6 months. Perform this check more often if there are frequent interruptions to the external water supply.

- First turn off the tap.
- Unscrew the water inlet hose from the tap.

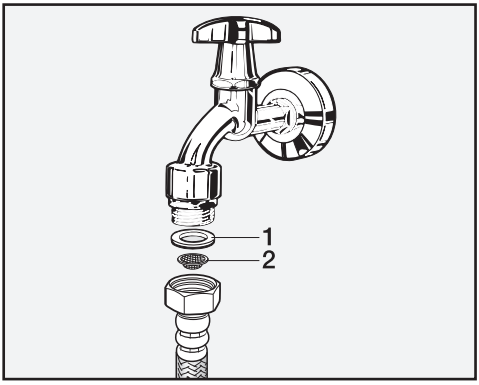

- Remove the rubber seal **1** from the recess.
- Hold the free end of the water inlet hose upside down. The plastic filter **2** will fall out.
- Clean the plastic filter.
- Reassemble in reverse order.
- Turn on the tap and check that the connection is watertight. If water drips out, tighten the connection.

Never forget to put the filter back in place after cleaning.

Descaling the washer-dryer

Descale the washer-dryer regularly depending on the water hardness. Check with your local water supplier if you do not know the water hardness level in your area. We recommend using the Miele descaler to descale the washer-dryer. The descaler is available from the Miele online shop or from Miele Experience Centres.

Cleaning recommendation:

Water hardness	Descaling programmes per year
Soft (I) (0–8.4 °dH)	0–1
Medium (II) (8.4–14 °dH)	1–2
Hard (III) (over 14 °dH)	2–3

Carrying out descaling

The drum must be **empty** and **dry**.

- Open the door.
- Add the descaler directly into the drum. Follow the manufacturer's dispensing recommendation.
- Close the door.
- Select the *Cottons* 90 °C programme.
- Start the programme.

At the end of the programme, the process is complete.

Many malfunctions and faults can be easily remedied. You can save time and money in many cases, as you do not need to contact Customer Service.

More information to help you remedy faults yourself can be found at www.miele.com.au/support/customer-assistance or www.miele.co.nz/support/customer-assistance.

A programme cannot be started

Problem	Possible cause and remedy
The display remains dark and the ⏻ sensor does not light up.	There is no power to the machine. ■ Check whether the mains plug is plugged in and switched on. ■ Check whether the circuit breaker has tripped.
	The washer-dryer has switched off automatically to save energy. ■ Switch the washer-dryer on with the ⏻ sensor.
You are asked to enter a code.	Access via a code has been activated. ■ Enter the code and confirm the entry. Deactivate the code if you do not wish this message to appear in the display the next time the machine is switched on.
The following appears in the display: ⚠ Door will not lock. Call Miele.	The door is not closed properly. The door lock could not engage. ■ Close the door again. ■ Start the programme again. ■ If the fault message appears again, contact Miele.

Fault messages after a programme has been cancelled

Problem	Possible cause and remedy
⚠ Water intake fault. Turn on the tap.	The water inlet is blocked or restricted. ■ Check whether the tap is turned on properly. ■ Check whether the inlet hose is kinked. ■ Check whether there is sufficient water pressure.
	The filter in the water inlet is blocked. ■ Clean the filter.

Problem	Possible cause and remedy
⚠ Drainage fault. Clean drain filter and pump. Check the drain hose.	The water outlet is blocked or restricted. The drain hose has been fixed too high. ■ Clean the drain filter and the drain pump. ■ Check whether the maximum delivery height of 1 m has been exceeded.
⚠ Waterproof system activated. Turn off the tap. Call Miele.	The water protection system has reacted. ■ Turn off the tap. ■ Call Miele.
⚠ Fault F. If restart fails, call Miele.	There is a fault. ■ Disconnect the washer-dryer from the electricity supply. Switch off at the wall and withdraw the plug from the socket, or switch off the mains circuit breaker. ■ Wait **at least 2 minutes** before reconnecting the washer-dryer to the electricity supply. ■ Switch the washer-dryer back on. ■ Restart the programme. ■ If the fault message appears again, contact Miele.

To switch off the fault message, switch the washer-dryer off with the ⏻ sensor.

Fault messages at the end of a programme

Message	Possible cause and remedy
ℹ Check load	There is no laundry in the drum.
	The load is too small. The laundry is still damp because the residual moisture content in the laundry cannot be measured. ■ In the future use a *Timed drying* programme for small amounts of laundry.
	The amount of laundry exceeded the maximum load for the selected programme. ■ Observe the maximum loads listed in the Programme chart.

Message	Possible cause and remedy
ℹ Intensive flow: Clean the filter and jet nozzle or remove foreign objects from the pump housing	The pumps are dirty. ■ Clean the pumps as described in “Opening the door in the event of a blocked drain outlet and/or power cut”. ■ Start a wash programme again after cleaning.
	The jet in the top of the door sealing ring is blocked with fluff. ■ Remove the fluff with your finger. Do not use any sharp or pointed tools to do this. ■ Start a wash programme again after cleaning.
	If the fault message appears again, contact Customer Service. The washer-dryer can still be used but with reduced functionality.
ℹ Start “Rinse out fluff” programme in the “Maintenance” menu	The *Rinse out fluff* programme has not been used for a long time. ■ Start the *Rinse out fluff* programme as described in “Cleaning and care – Starting maintenance programmes”.

To switch off the fault message, switch the washer-dryer off with the ⏻ sensor.

Fault messages at the end of a programme

Message	Possible cause and remedy
ℹ Align the machine. Laundry not properly spun.	The smoothing process which the laundry undergoes at the end of the programme could not be carried out properly. ■ Check whether the washer-dryer is aligned correctly as described in “Installation – Levelling the machine”. ■ Check whether the maximum delivery head of 1.0 m has been exceeded.
	If the fault message appears again, contact Miele. The washer-dryer can still be used but with reduced functionality.

Message	Possible cause and remedy
ℹ Hygiene info: Select "Maintenance" and start the "Clean machine" programme.	No drying programme or no wash programme using a temperature above 60°C has been run for a long time. ■ In order to prevent bacteria and unpleasant odours building up in the machine, run the *Clean machine* programme using the Miele machine cleaner or powder detergent.

To switch off the fault message, switch the washer-dryer off with the ⏻ sensor.

Problems with TwinDos

Problem	Possible cause and remedy
ℹ "TwinDos" ① is empty.	The cartridge is empty. ■ Replace the cartridge. ■ Check whether the laundry is clean. There may not have been enough detergent. Wash the items again if necessary.
ℹ Only a few more washes possible. Please order new detergent for compartment ①.	The detergent in the cartridge is running low. The remaining detergent is sufficient for another 4 to 8 wash programmes. ■ Order a new cartridge.
ℹ Use "TwinDos" or carry out "TwinDos" Maintenance in the "Maintenance" menu. See the operating instruction manual for more information.	TwinDos has not been used for a long time. ■ Use TwinDos for one of your next loads. ■ Carry out the TwinDos maintenance programme as described in "Cleaning and care – Starting maintenance programmes".
⚠ "TwinDos" Maintenance for compartment ① must be started in the "Maintenance" menu. See the operating instruction manual for more information.	TwinDos has not been used for a long time. The detergent in the hoses may dry up. ■ Carry out the TwinDos maintenance programme **immediately** as described in "Cleaning and care – Starting maintenance programmes".
The messages shown on this page are examples. They may differ depending on whether they refer to compartment ① or ②.	

The messages will appear at the end of the programme and when the washer-dryer is switched on and need to be confirmed with the *OK* sensor.

Problems with TwinDos

Problem	Possible cause and remedy
There are dark specks in the liquid detergent.	Mould has developed in the detergent. ■ Pour the liquid detergent out of the container and then clean the container thoroughly.
No detergent and/or fabric softener was dispensed.	Automatic dispensing has not been activated. ■ Touch the *TwinDos* sensor before running the next programme. Automatic dispensing will be activated.
	No detergent/fabric softener was dispensed although automatic dispensing was activated. ■ Try again. ■ If detergent is still not dispensed, call Miele.
A new detergent cartridge has been inserted, but the cartridge is identified as empty when the machine is switched on.	The washer-dryer was switched off when the detergent cartridge was replaced. ■ Switch the washer-dryer on. ■ Remove the detergent cartridge and then reinsert it into the compartment. The counter is set to 0.

General problems with the washer-dryer

Problem	Possible cause and remedy
The washer-dryer is not steady during a spin cycle.	The machine feet are not level. ■ Level the machine and adjust the feet correctly.
Unusual pumping noises.	This is not a fault. Slurping noises occur at the end of the pump sequence as a normal part of operation.
Spinning sounds during the drying process.	This is not a fault. The machine will spin even during a drying programme (thermospin).
The laundry has not been spun properly and the laundry is still wet.	The machine detected an imbalance during the final spin and reduced the spin speed automatically. ■ Include both large and small items in the load as this will give better distribution.

Problem solving guide

Problem	Possible cause and remedy
Large amounts of detergent residue remain in the detergent drawer.	The water pressure is too low. ■ Clean the filters in the water inlet. ■ It may be useful to select the *Water plus* option.
	Powder detergent used in conjunction with water softeners tends to become sticky. ■ Clean the detergent dispenser drawer and, in the future, add washing powder to the dispenser drawer first, and then add the water softener.
There is water in the fabric softener compartment next to the capsule.	CapDosing was not activated or an empty capsule was not removed at the end of the last wash programme. ■ Make sure that you remember to activate CapDosing the next time you insert a capsule. ■ Remove and dispose of the empty capsule at the end of each programme.
	The small pipe in the detergent dispenser drawer onto which the capsule is placed is blocked. ■ Clean the small pipe.

General problems with the washer-dryer

Problem	Possible cause and remedy
Fabric softener is not completely dispensed or too much water remains in the ❀ compartment.	The siphon tube is not correctly positioned or clogged. ■ Clean the siphon (see “Cleaning and care - Cleaning the detergent dispenser drawer”).
At the end of the programme there is still liquid in the capsule.	The small pipe in the detergent dispenser drawer onto which the capsule is placed is blocked. ■ Clean the small pipe.
	This is not a fault. For technical reasons a small amount of water will remain in the capsule.
The display is in a different language.	A different language has been selected in “Settings - Language ⚑”. ■ Set the language you want.
	The flag symbol serves as a guide.
The display is dark.	The display has switched off automatically to save energy (Standby mode). ■ Touch the *Start/Stop* sensor. This switches Standby off.

Problem	Possible cause and remedy
The programme duration remaining that is shown in the display fluctuates.	The countdown time adapts constantly to the current washing and drying situation.

General problems with the washer-dryer

Problem	Possible cause and remedy
Foam comes out of the detergent dispenser drawer while the *Rinse out fluff* programme is running.	There is residual detergent from the last programme in the suds container. ■ Make sure you always dispense the correct amount of detergent. For precise dispensing, use automatic detergent dispensing.
There is foam in the drum at the end of the *Rinse out fluff* programme.	The *Rinse out fluff* programme also rinses out residual detergent from the suds container. This can lead to the formation of foam. ■ Run the *Rinse out fluff* programme regularly to prevent detergent residues from accumulating in the suds container.
There is still fluff in the drum after the end of the *Rinse out fluff* programme.	You have not run the *Rinse out fluff* programme for a long time. ■ Remove the fluff from the drum. ■ Run the *Rinse out fluff* programme on a regular basis.
The washer-dryer smells.	The Hygiene info was ignored. A programme using a temperature above 60°C has not been run for a long time. ■ In order to prevent bacteria and unpleasant odours building up in the machine, run the *Clean machine* programme using the Miele machine cleaner or powder detergent.
	The detergent dispenser drawer was left closed after washing. ■ Leave the detergent dispenser drawer slightly open to allow it to dry.

An unsatisfactory wash result

Problem	Possible cause and remedy
White residues which look like powder detergent are seen on dark textiles after washing.	The detergent contains compounds (zeolites) to aid water softening which are not soluble in water. These have ended up on the laundry. ■ Try and brush off the residues with a soft brush once the laundry is dry. ■ In the future, wash dark textiles with a detergent which contains no zeolites. Liquid detergents do not usually contain zeolites. ■ Use the *Dark garments* programme.
Liquid detergent does not give the required result.	Liquid detergents usually contain no bleaching agents. They do not remove fruit, coffee and tea stains. ■ Use the Miele 2-phase system. The targeted addition of UltraPhase 2 during the wash process removes stains effectively. ■ Use a general purpose powder detergent containing a bleaching agent.
Grey, greasy particles cling to washed laundry.	Insufficient amounts of detergent were used. The laundry was heavily soiled with grease (oils, ointments). ■ Use more detergent or liquid detergent with this type of soiled laundry. ■ Before washing the next load, run the *Clean machine* programme using the Miele machine cleaner or a powder detergent.

Unsatisfactory drying result

Problem	Possible cause and remedy
The laundry is too damp after drying and Check load **appears in the display**	The load is too small. The electronics could not assess the residual moisture correctly. ■ Start the programme again and instead of a drying level select a *Timed drying* programme. ■ In the future use a *Timed drying* programme for small amounts of laundry.
	During the spin cycle, the laundry formed a ring in the drum because the laundry was distributed unevenly. The laundry formed a ring during the thermospin because it was too damp or because the spin speed was set too high. ■ Open the door and loosen the laundry. ■ Start the drying programme again with a lower spin speed, or select *Timed drying* instead of a drying level.
The laundry feels damp after drying.	The *Pre-ironing* Extra was selected. ■ Unload the laundry and place it on hangers to finish drying.
	Warm laundry can feel damp. ■ Spread the laundry out to cool it down.
The laundry is too damp or too dry after a drying cycle.	The desired residual moisture level is between two drying levels. ■ Change the level of drying as described in “Settings - Drying levels”.
There is still water in the drum after drying.	There is a blockage in the water outlet. ■ Clean the drain filter and the drain pump as described in “Opening the door in the event of a blocked drain outlet and/or power cut” and check the height of the drainage point.

The door will not open

Problem	Possible cause and remedy
The door cannot be opened while a programme is running.	The door is locked during a programme. ■ Follow the instructions in “Washing – 6. Starting a programme“.
	There is still water in the drum and the washer-dryer is unable to drain. ■ Clean the drain filter and the drain pump as described in “Opening the door in the event of a blocked drain outlet and/or power cut”.
	The water level in the drum is too high. ■ Cancel the programme. The water will be pumped away.
At the end of the programme or after a programme cancellation: Extra cooling **appears in the display.**	For safety reasons, the door cannot be opened if the temperature in the drum exceeds 55°C during washing or 70°C during drying. ■ Wait until the temperature in the drum has decreased and the message has gone out in the display.
The following appears in the display: The door lock is jammed. Call Miele.	The door lock has jammed. ■ Call Miele.

Opening the door in the event of a blocked drain outlet and/or power cut

- Switch the washer-dryer off.

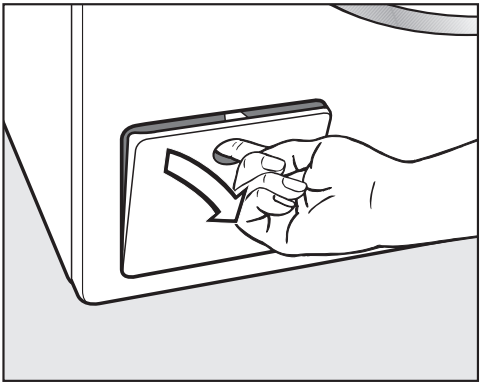

- Open the drain pump access panel.

Blocked drain outlet

If the drain outlet is blocked, a large quantity of water can remain in the washer-dryer.

> ⚠ Risk of scalding due to hot suds.
> Escaping suds will be hot if laundry has been washed at high temperatures.
> Drain the suds carefully.

Procedure for draining the machine

> Remove the drain filter, though not completely.

- Place a suitable container under the access panel, e.g. a universal oven tray.

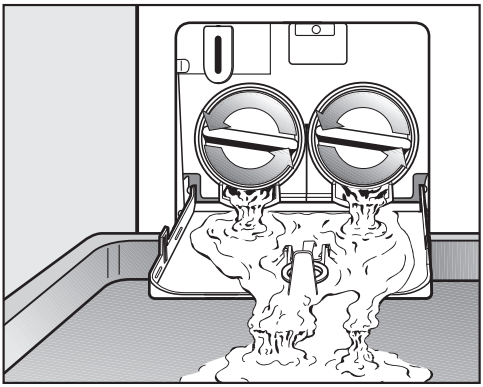

- Slowly unscrew the filters until water runs out. Be careful not to release too much water at once. If the flow of water is too strong, some water can seep into the machine base and activate the water protection float switch. This will prevent the machine from functioning.
- To interrupt the flow of water, tighten the filters again.

Once the flow of water ceases:

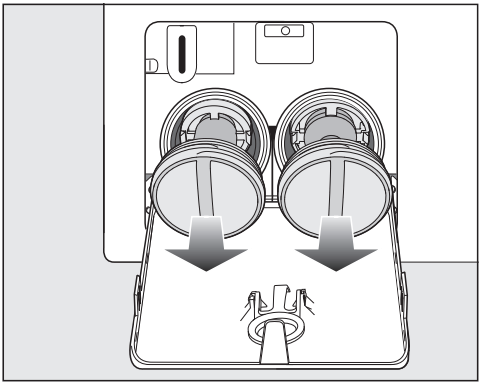

- Remove the filters completely.

Cleaning the drain filters

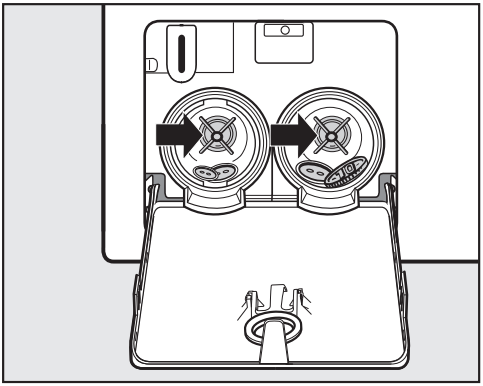

- Clean the filters thoroughly.
- Remove any foreign objects (e.g. buttons, coins) and clean the interior. Turn the impellers by hand to check that they rotate freely.

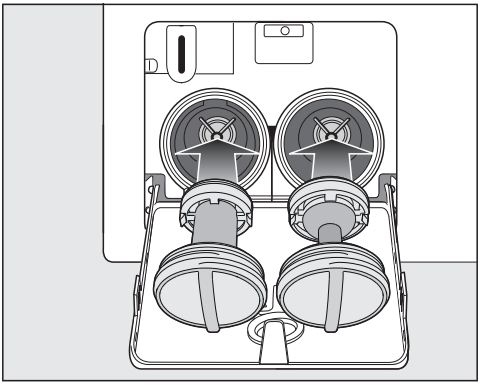

- Replace the filters correctly (on the right and left) and tighten them.

⚠ Risk of damage from leaking water.
Water will escape from the washer-dryer if you forget to replace the drain filters.
Replace the drain filters correctly and tighten them securely.

Opening the door

⚠ Danger of injury due to rotating drum!
Reaching into a moving drum is extremely dangerous. Danger of injury!
Always make sure that the drum is stationary before reaching in to remove laundry.

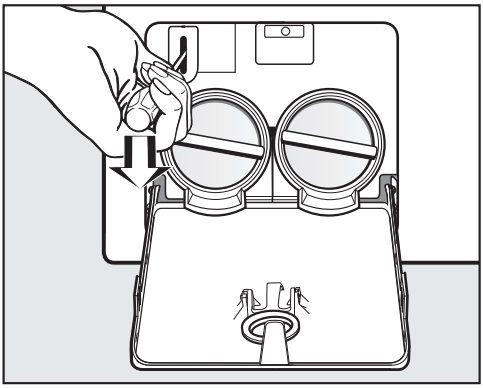

- Use a screwdriver to unlock the door of the appliance as shown.
- Pull open the door.

You can find information on how to remedy faults yourself at www.miele.com.au/support/customer-assistance or www.miele.co.nz/support/customer-assistance and about Miele spare parts at www.miele.com.au/service or www.miele.co.nz/service.

Contact in case of fault

In the event of any faults which you cannot remedy yourself, please contact Miele.

You can book a Miele customer service call-out online at www.miele.com.au/service or www.miele.co.nz/service.

Contact information for Miele can be found at the end of this booklet.

Please quote the model and serial number of your appliance when contacting Miele. This information can be found on the data plate.

The data plate is found above the porthole glass when the door is opened.

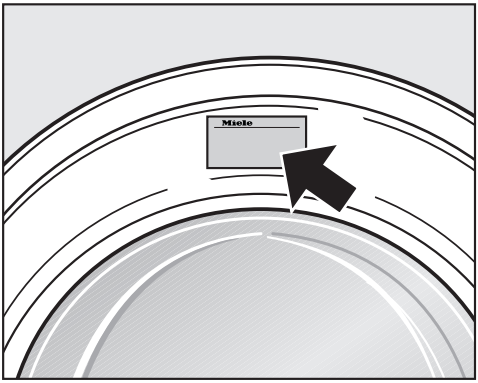

Optional accessories

Products specially tailored to your washer-dryer – such as detergent and accessories – are available from the Miele online shop and Miele Customer Service.

You can access the Miele online shop via the following QR code:

Warranty

The manufacturer's warranty for this appliance is 2 years.

For further information, please refer to your warranty booklet.

Front view

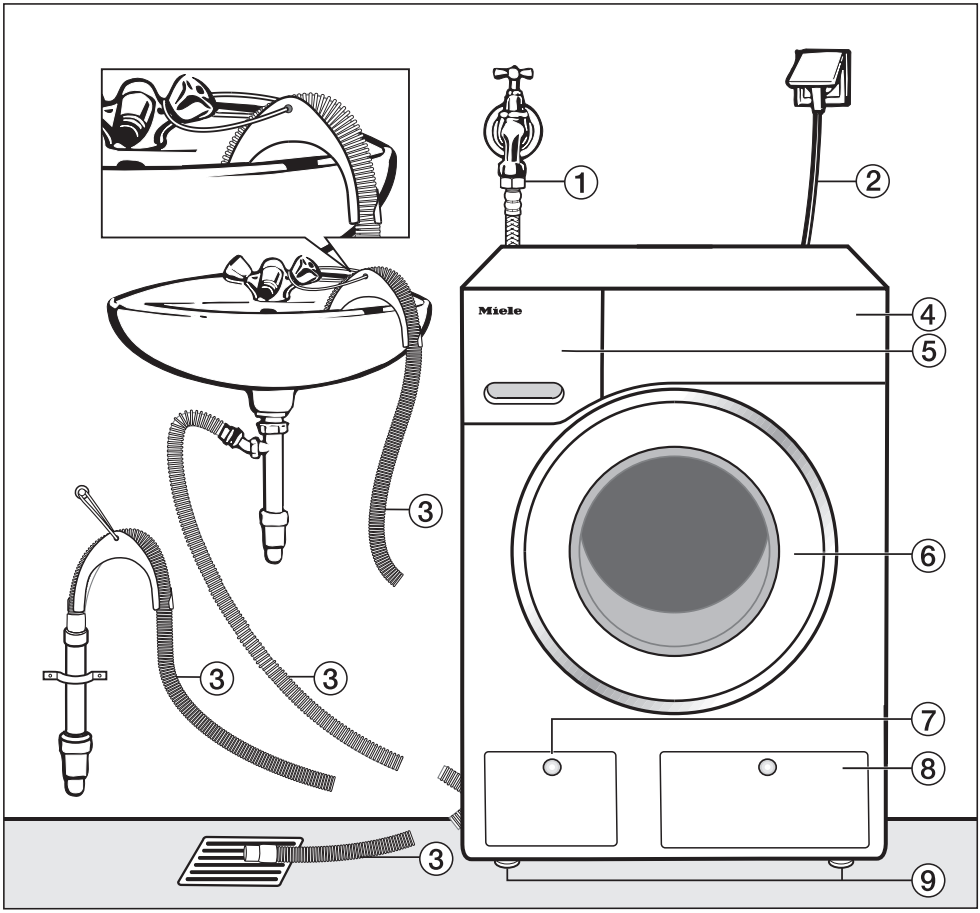

① Water inlet hose (waterproof metal, braided)

② Electrical connection

③ Flexible drain hose (with detachable swivel elbow)

④ Control panel

⑤ Detergent dispenser drawer

⑥ Door

⑦ Access to drain filters, drain pump and emergency release

⑧ Access panel for TwinDos containers

⑨ 4 height-adjustable feet

Rear view

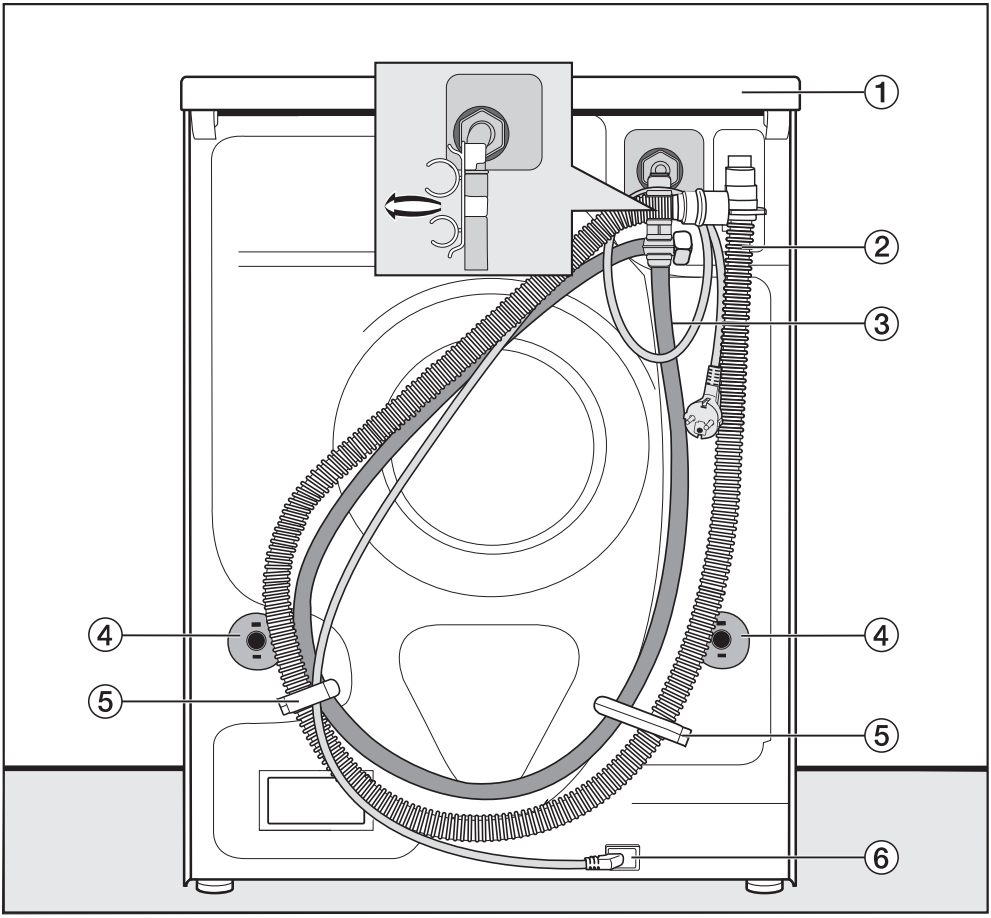

① Protruding lid for holding when moving the machine

② Drain hose

③ Water inlet hose

④ Safety caps for transit bars

⑤ Transport clips for water inlet hoses and drain hoses

⑥ Electrical connection

Installation surface

A concrete floor is the most suitable installation surface. It is far less prone to vibration during the spin cycle than wooden floorboards or a carpeted surface.

Please note:

- The washer-dryer must be level and securely positioned.
- To avoid vibrations during spinning the washer-dryer must not be installed on soft floor coverings.

If installing on a wooden joist floor, please note:

- Check for the presence of pipes and cables first.
- Use a plywood base underneath the washer-dryer (at least 59 x 52 x 3 cm). The base must span several joists and be bolted to the joists and not only to the floorboards.

Useful tip: If possible, install the washer-dryer in a corner of the room, as this is usually the most stable part of the floor.

Carrying the washer-dryer to its installation site

⚠ Danger of injury due to unsecured lid.

Make sure the fixings at the back of the lid are secure. They may become brittle due to external circumstances. There is a danger of the lid being pulled off when carrying the appliance.

Before carrying the machine, check that the lid is secure where it protrudes at the back of the machine.

- Carry the washer-dryer by the front feet and by the lid where it protrudes at the back of the appliance.

Removing the transit bars

Removing the transit bars

Remove the left-hand transit bar first, followed by the right-hand transit bar.

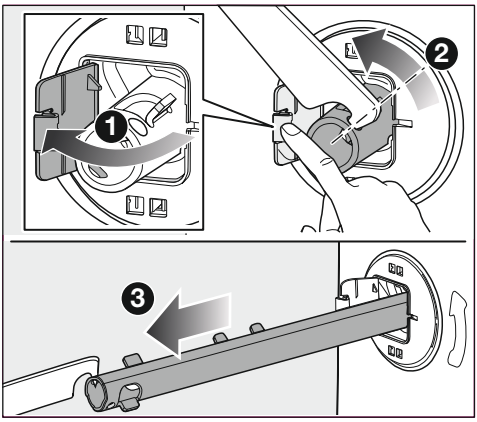

❶ Push the cover out.

❷ Using the spanner supplied, turn the transit bar 90°.

❸ Then pull the transit bar out.

- Remove the right-hand transit bar in the same way.

Covering the holes

⚠ Risk of injury from sharp edges.

There is a risk of injury from reaching into holes that are not covered.

After removing the transit bars, cover the exposed holes.

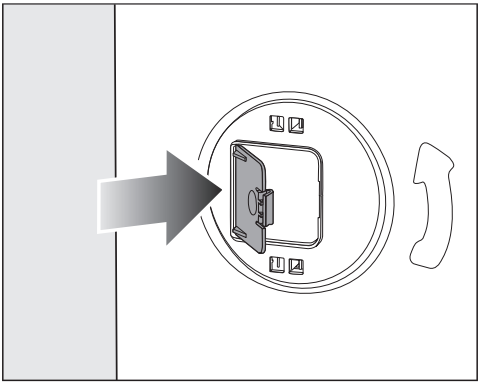

- Press the covers firmly shut until they click into place.

Refitting the transit bars

⚠ Risk of damage from incorrect transport.

The washer-dryer may become damaged if moved without the transit bars in place.

Keep the transit bars in a safe place. Fit them again if the washer-dryer is to be moved (e.g. when moving house).

Opening the flaps

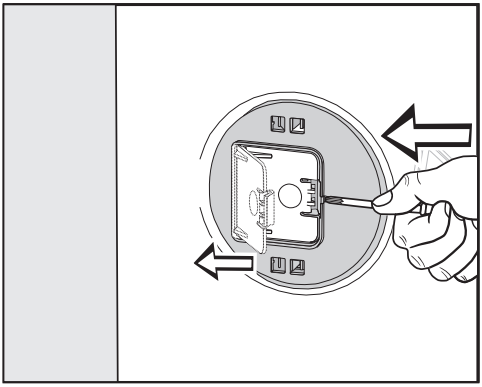

- Push against the catch with a pointed object, e.g. a narrow screwdriver.

The flap will open.

Fitting the transit bars

- Install the transit bars in reverse order to their removal.

Useful tip: If you lift the drum slightly, the transit bars can be pushed in more easily.

Additional installation requirements

Installing under a continuous worktop

Building under kits* must only be installed/dismantled by a specialist.

- A special **building under kit*** is required. The cover plate included in the building under kit* replaces the lid of the washer-dryer. It is necessary to fit the cover plate for electrical safety reasons.
- Connections for electricity, water and drainage should be installed in such a way that they remain accessible when the washer-dryer is in its final position.

The building under kit includes installation instructions.

* Optional accessories

Levelling the washer-dryer

The washer-dryer must stand perfectly level on all four feet to ensure safe and proper operation.

Incorrect installation may increase electricity and water consumption and may cause the machine to move about.

⚠ The appliance must not be installed behind a lockable door, a sliding door or a door with a hinge on the opposite side to that of the appliance, in such a way that a full opening of the appliance door is restricted.

Screwing out and adjusting the feet

The 4 adjustable feet are used to level the washer-dryer. All four feet are screwed in when the appliance is delivered.

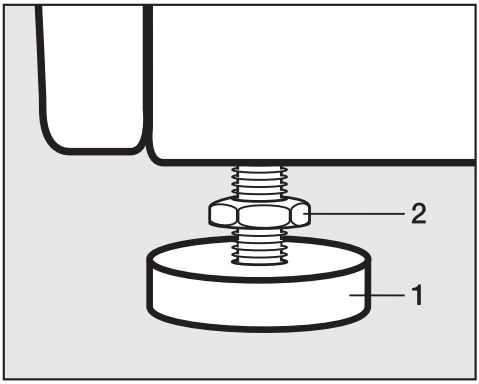

■ Using the spanner supplied, turn counter nut **2** in a clockwise direction. Then turn counter nut **2** together with foot **1** to unscrew.

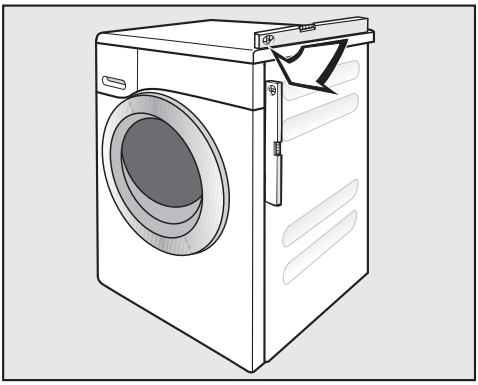

- Use a spirit level to check the washer-dryer is standing level.
- Hold foot **1** securely with a pipe wrench. Turn counter nut **2** again using the spanner supplied until it sits firmly up against the housing.

⚠ Risk of damage from incorrectly aligned washer-dryer.

There is a danger of the washer-dryer moving about if the feet are not secured.

Turn all 4 counter nuts for the feet until they sit firmly up against the casing. Please also check this for the feet which did not need adjustment.

The Miele water protection system

The water protection system protects all parts of the washer-dryer from water damage.

The system consists of three main components:

- the inlet hose
- the electronic unit, and the drainage and overflow protection
- the drain hose

Inlet hose

- Protects the safety valve from bursting

  The inlet hose can withstand pressure of more than 14,000 kPa.

- Protective sleeve

  The inlet hose has a protective sleeve which is made from metal braiding as a “second skin” to protect the hose against damage.

Electronic unit and machine housing

- Sump

  Any leaking water is collected in a sump in the base of the machine. A float switches off the water inlet valves. Further water intake is blocked. The water inside the suds container is pumped out.

- Overflow protection

  This prevents the machine from taking in too much water and overflowing. If the water level exceeds a certain level, the drain pump switches on and pumps the excess water away.

Drain hose

The drain hose is protected by a ventilation system which prevents the machine from being emptied completely.

Water inlet

⚠ Health risk and risk of damage due to contaminated incoming water.

The quality of the incoming water must correspond to the drinking water specification of the country in which the washer-dryer is being operated.

Always connect the washer-dryer to the drinking water supply.

The water connection pressure needs to be between 100 kPa (1 bar) and 1000 kPa (10 bar). If the water connection pressure exceeds 1000 kPa, a pressure reducing valve must be installed.

A tap with a ¾ inch threaded union is required for the connection. If this is not available, only a qualified plumber may connect the washing machine to the mains water supply.

Connecting the water inlet hose

- Screw the water inlet hose onto the thread of the water inlet with the nut.
- Slowly turn on the tap and check the connection for leaks.
- Correct the position of the seal and screw thread if necessary.

The screw thread is subject to water connection pressure.

Check that the connection is leakproof.

The washer-dryer is not suitable for connection to a hot water supply.
The washer-dryer must not be connected to a hot water connection.

Maintenance

Only use a genuine Miele hose that has been pressure tested to withstand at least 14,000 kPa should you ever need a replacement.

The dirt filter in the union nut at the open end of the water inlet hose protects the water intake valve.
This filter must not be removed.

Drainage

The suds are drained through a drain pump with a 1 m delivery head. For the water to drain freely, the hose must be installed free of kinks. The elbow piece supplied hooks onto the end of the hose. If required, the hose can be extended to a length of up to 5 m. The necessary parts can be purchased from Miele.

For a delivery head of more than 1 m (up to a max. of 1.8 m) a replacement drain pump will need to be fitted. Please contact Miele for advice. In this case the hose can be extended to a maximum of 2.5 m. The necessary parts can be purchased from Miele.

Drain hose connection options

1. Directed into a sink or basin.

   Please note:

   – Hook the hose over the edge and secure it.

   – Make sure that the water can drain away freely without hindrance. Otherwise there is a risk of water overflowing or of some of the drained water being sucked back into the machine.

2. Connected securely to a plastic drain pipe with a rubber nipple (there is no need to use a siphon).
3. Connected securely to a floor drain (gully).
4. Connected securely to a standpipe.

Connecting to a washbasin

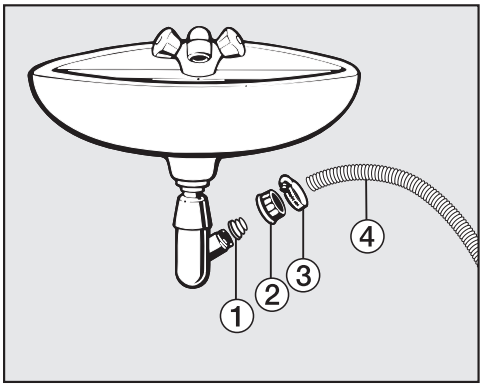

① Adapter

② Washbasin nut

③ Hose clip

④ End of the hose

- Fit the adapter ① to the sink drain outlet using the nut ②.
- Attach the end of the hose ④ to the adapter ①.
- Use a screwdriver to tighten the hose clip ③ up close to the nut.

Electrical connection

The washer-dryer is supplied with a mains cable with moulded plug ready for connection to an earthed socket.

The socket must be easily accessible after the washer-dryer has been installed. If the socket is not easily accessible, ensure that a suitable means of disconnection is provided on the installation side for each pole.

⚠ Risk of fire from overheating.
Connecting the washer-dryer to a multi-socket adapter or to an extension lead can overload the cable.
For safety reasons, do not use an extension cable or multi-socket adapter.

All electrical work must be carried out by a suitably qualified and competent person in strict accordance with national and local safety regulations.

For safety reasons, we recommend using a type ⊟ residual current device (RCD) in the assigned electrical installation for connecting the washer-dryer.

If the power supply cord is damaged, it must only be replaced with a specific power supply cord of the same type (available from Miele Customer Service). For safety reasons, replacement may only be carried out by a suitably qualified specialist or Miele Customer Service.

These operating instructions and the data plate indicate the nominal power consumption and the appropriate fuse rating. Compare this information with the data of the on-site electrical connection.
If in any doubt, consult a qualified electrician.

Temporary or permanent operation with a self-sufficient or non-mains synchronous energy supply system (e.g. isolated networks, back-up systems) is possible. A requirement for the operation is that the energy supply system complies with all current local and national requirements that apply to stand-alone, solar and/or battery systems.
The protective measures provided in the domestic installation and in this Miele product must also be assured in their function and operation in isolated operation or in non-mains synchronous operation, or replaced with equivalent measures in the installation.

Height	850 mm
Width	596 mm
Depth	637 mm
Depth with door open	1055 mm
Height for building under	820 (+8/-2) mm
Width for building under	600 mm
Weight	Approx. 98 kg
Capacity, washing Capacity, drying	8.0 kg dry laundry 4.0 kg dry laundry
Supply voltage	See data plate
Rated load	See data plate
Fuse rating	See data plate
Consumption data	See “Consumption data”
Minimum water connection pressure	100 kPa (1 bar)
Maximum water connection pressure	1000 kPa (10 bar)
Water inlet hose length	1.55 m
Drain hose length	1.50 m
Power supply cord length	2.00 m
Maximum delivery head	1.00 m
Maximum drainage length	5.00 m
LEDs	Class 1
Test certifications awarded	See data plate
Frequency band of the Wi-Fi module	2.4000–2.4835 GHz
Maximum transmission power of the module	< 100 mW

Consumption data

Programmes	°C	Load kg	Energy kWh	Water Litres	Running time h:min	Temperature[1] °C	Residual moisture %	Spin speed rpm
Washing								
ECO 40–60		4.0	0.30	52	2:39	28	43	1600
		2.0	0.20	28	2:29	25	46	1600
Cottons	60	8.0	1.35	57	2:29	54	50	1600
	20	8.0	0.35	72	2:39	20	50	1600
Minimum iron	30	3.5	0.32	47	1:59	30	30	1200
Express[2]	40	3.5	0.33	30	0:20	27	60	1200
Woollens	30	2.0	0.23	35	0:39	–	–	1200
QuickPower	40	4.0	0.58	40	0:49	–	–	1600
Washing and drying								
ECO 40–60 Normal		2.5	1.60	43	3:59	24	0	1600

[1] Maximum laundry temperature reached in main wash.

[2] *Quick* Extra activated

TwinDos dispensing must be deactivated when carrying out comparison tests.

Information for customers:

Consumption data can vary from the nominal values listed depending on water pressure, water hardness, water inlet temperature, room temperature, type and volume of load, fluctuations in the electricity supply and any Extras selected.

Washing	
The figure quoted in the bucket is the maximum temperature at which the garment can be washed.	
95	Normal agitation
60	Reduced agitation
30	Much reduced agitation
	Hand wash
	Do not wash

Programme selection examples

Programme	Garment care label symbols
ECO 40-60	40 60
Cottons	95 70 60 50 40 30
Minimum iron	95 60 50 40 30
Delicates	40 30
Woollens	

Drying	
	Normal temperature
	Low temperature
	Do not tumble dry

Ironing	
	Approx. 200 °C
	Approx. 150 °C
	Approx. 110 °C Ironing with steam can cause irreversible damage.
	Ironing prohibited

Professional cleaning	
F P	Dry clean only. The letters indicate the type of cleaning agent required.
W	Wet cleaning
	Dry cleaning prohibited

Bleaching	
	Any oxidation bleach can be used
	Use oxygen bleach only
	Do not bleach

Default settings can be altered to adapt the washer-dryer to different requirements. Settings can be altered at any time.

Calling up settings

- Switch the washer-dryer on.
- Scroll through the main menu until Settings appears.
- Touch the Settings sensor.

The display will change to show the Settings menu.

Selecting settings

The settings are grouped into different areas.

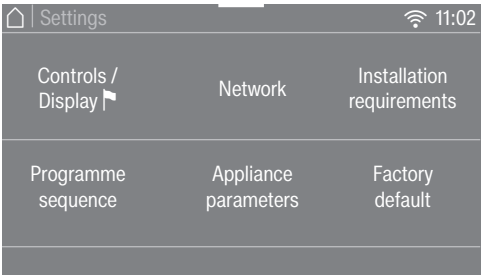

- Select the required area.
- Scroll through the list until the setting you want appears.
- Touch the sensor to select the setting you require.

Changing a setting

- Change the value displayed and confirm with *OK* ...
- ... or touch an option to select it.

An option which is selected will be highlighted orange.

The option is saved. The display will then switch to the Settings menu, or go back to the previous menu level.

Closing the Settings menu

- Touch the ⮌ sensor.

The display will go back to the previous menu level.

- Touch the ⌂ sensor.

The display will change to the main menu.

Controls / Display ⚑

Language ⚑

The display can be set to appear in one of several different languages.

The flag ⚑ after the word *Language* acts as a guide in case a language which is not understood is set.

The language selected is saved.

Code

The code prevents the washer-dryer being used without your knowledge.

Options

- Activate

  The factory default code is 125 and can be activated. When the code has been activated, you have to enter the code after switching the washer-dryer on. Otherwise the washer-dryer cannot be operated.

- Deactivate

  For using the washer-dryer without entering the code. This only appears if the code has been activated previously.

- Change

  You can enter any code.

If you forget the code, the washer-dryer will have to be unlocked by a Miele service technician.

Important! Make a note of your new code.

Memory

The washer-dryer will save the last settings selected for a programme (temperature, spin speed and some of the Extras) after the programme has started.

The next time the programme is chosen these saved settings will appear in the display.

Factory default setting: Memory is switched off.

Clock display

If the clock format has been set, the time of day can be set.

Clock format

- 24 h clock (factory default setting)
- 12 h clock

Time

- The time can be set.

Volume

The volume for various sounds can be changed.

- Finish tone
- Keypad tone
- Welcome tone

It can be set to one of seven different settings or switched off altogether.

Display brightness

The brightness of the display can be altered.

It can be set to one of seven different settings.

Units

The temperature can be displayed as degrees Celsius (°C) or Fahrenheit (°F).

Factory default setting: Celsius (°C).

Finish tone behaviour

The finish tone sounds to let you know that it is the end of the programme. You can decide how long the finish tone should sound for.

Options

- Only 3 times at the end

  The finish tone sounds 3 times at the end of the programme.

- Up to 1 hour after finish

  The finish tone sounds until the washer-dryer switches off automatically (max. 1 hour).

Programme sequence

TwinDos

You can set and check the type of detergent and dispensing quantities.

Select detergent

If you wish to use your own detergent with the TwinDos function instead of UltraPhase 1 and 2, you will need separate TwinDos refill containers (optional accessories).

UltraPhase 1 and 2 can only be dispensed as a package. If a different detergent is selected, the setting for the other compartment is automatically deleted.

The following detergents can be used:

- Miele UltraPhase 1
- Miele UltraPhase 2
- Universal detergent
- Colour detergent
- Delicates detergent
- Delicates/Woollens
- Fabric softener

Follow the manufacturer's instructions on dosage given on the packaging.

The dosage amount required for the agent being used must be set. Follow the instructions in the display on how to do so.

Useful tip: If you select No agent, the respective TwinDos compartment will be deactivated.

Change dosage

The values set for dispensing detergent from compartments ① and ② can be checked and corrected.

Soiling

You can specify the default setting for the degree of soiling.

- Light
- Normal (factory default)
- Heavy

Water plus level

There are 4 different water levels which can be selected by activating the *Water plus* Extra.

Options

- Normal (factory default setting)
- Plus 💧
- Plus 💧💧
- Plus 💧💧💧

Maximum rinse level

The water level in the rinse can be permanently set to the highest value.

This function is important for allergy sufferers as it achieves excellent rinse results. The water consumption will be increased.

Factory default setting: the maximum rinse level setting is switched off.

Soak duration

You can set a duration for the soak process of between 30 minutes and 6 hours.

A duration can be selected in 30-minute increments. When the *Soak* Extra is selected, the laundry will be soaked for the duration selected.

A duration of *0:30 h* is set as standard.

Longer pre-wash Cottons

If you require a longer pre-wash, you can extend the standard pre-wash time of 25 minutes.

Options

- Normal (factory default setting)

  25-minute pre-wash.
- + 6 min

  31-minute pre-wash.
- + 9 min

  34-minute pre-wash.
- + 12 min

  37-minute pre-wash.

Gentle action

With Gentle action activated, drum agitation is reduced. In this way, lightly soiled items can be washed more gently.

Gentle action can be activated for the *Cottons* and the *Minimum iron* programmes.

If Gentle action is activated, each wash phase in the programme selected will be run with the Gentle action wash rhythm.

Factory default setting: Gentle action is switched off.

Comp laundry protection

The maximum final spin speed can be limited to prevent laundry forming a ring around the drum.

The Comp laundry protection setting is only effective with continuous washing and drying.

Options

- Off (factory default setting)
- 900
- 1000
- 1100
- 1200

Drying levels

You can adjust the drying levels in the *Cottons*, *Minimum iron* and *Automatic plus* programmes if needed.

It can be set to one of seven different settings.

Extended cool down

The cooling down phase which takes place before the end of a programme can be extended if required. This cools the garments down even more. The cooling down phase can only be extended if a drying level has been selected. Extended cool down is not active for timed drying.

The extended cool down time can be set between 0 min (factory default setting) and 18 min.

Network

Miele@home

Control the networking of your washer-dryer with your Wi-Fi network.

Options

- Set up

  This message only appears if the washer-dryer has not yet been connected to a Wi-Fi network.

  Please refer to "Before the first use" for instructions on how to set up the connection.

- Deactivate

  The setting is only visible if Miele@home is activated.

  Miele@home remains set up, the Wi-Fi function is switched off.

- Activate

The setting is only visible if Miele@home is deactivated.

The Wi-Fi function is reactivated.

- Connection status

  The setting is only visible if Miele@home is activated.

  The Wi-Fi reception quality, network name and IP address are displayed.

- Set up again

  The setting is only visible if Miele@home is set up.

  Resets the Wi-Fi login (network) to immediately re-establish a new connection.

- Reset

  The setting is only visible if Miele@home is set up.

  The Wi-Fi function is deactivated and the Wi-Fi connection will be reset to the factory default.

The network configuration should be reset whenever the washer-dryer is being disposed of or sold, or if a used washer-dryer is being put into operation. This is the only way to ensure that all personal data has been removed and, in the case of the latter, the previous owner will no longer be able to access the appliance.

A new connection set-up has to be carried out in order to use Miele@home again.

Remote control

The Remote control setting (available depending on country) is only visible if the Miele@home setting is set up and activated.

If the Miele App has been installed on your mobile device, you can check the status of your washer-dryer from anywhere and start it remotely.

You can also operate your washer-dryer remotely with the *MobileStart* programme.

You can switch off the Remote control setting if you do not want to operate the washer-dryer with your mobile device.

If Remote control is not switched on, the App can cause the programme to be cancelled.

Use the “Timer” sensor to set a time by when you want to start the washer-dryer (see “Timer/SmartStart”).
The washer-dryer will then start within the specified timeframe when it receives your signal.
If it has not received a start signal by the latest start time set, the washer-dryer will start automatically.

Remote control is switched on in the factory default setting.

SmartGrid

The SmartGrid setting (available depending on country) is only visible if the Miele@home setting is set up and activated.

You can set your washer-dryer to start automatically based on an external signal within a certain time period.

Activating SmartGrid gives the *Timer* sensor a new function.

Set SmartStart by using the *Timer* sensor (see “Timer/SmartStart”).
The washer-dryer will then start within the timeframe specified when it receives a signal from the energy supplier.
If an external signal has not been received from the energy supplier by the latest start time set, the washer-dryer will start automatically.

The SmartGrid function is switched off in the factory default setting.

Remote Update

The Remote Update menu option is only displayed and can only be selected if the requirements for using Miele@home have been met (see "Before the first use – Miele@home").

The RemoteUpdate function is used for updating the software in your washer-dryer. If an update is available for your washer-dryer, it will automatically download it. Updates will not be installed automatically. They must be initiated manually.

If you do not install an update, you can continue to use your washer-dryer in the usual way. However, Miele recommends installing updates.

Activating/Deactivating

The RemoteUpdate function is activated as standard. Available updates will be downloaded automatically but will only be installed if you initiate the installation manually.

Deactivate RemoteUpdate if you do not want any updates to be downloaded automatically.

Running a RemoteUpdate

Information about the content and scope of an update is provided in the Miele App.

A message will appear in your washer-dryer display if a software update is available.

You can install the update immediately or postpone this until later. When the washer-dryer is switched on again, you will be reminded about the update.

Deactivate RemoteUpdate if you do not want to install the update.

The update may take several minutes.

Please note:

- You will only receive a message when an update is available.
- Once an update has been installed, it cannot be undone.
- Do not switch off the washer-dryer during an update. Otherwise, the update will be aborted and will not be installed.
- Some software updates can only be carried out by a Miele service technician.

Appliance parameters

Copyright and licences for operating and control software

For the purpose of operating and controlling the appliance, Miele uses proprietary or third-party software that is not covered by open source licensing terms. These items of software/software components are protected by copyright. The copyright powers of Miele and third parties must be respected.

In addition, the appliance contains software components which are distributed under open source licensing terms. You can access these open source components along with the associated copyright notices, copies of the valid licensing terms and any further information in the appliance under the menu option Settings | Appliance parameters | Legal information | Open source licences. The liability and warranty arrangements for the open source licences displayed at this location only apply in relation to the respective rights holders.

Copyright and licences for the communication module

For the purpose of operating and controlling the communication module, Miele uses proprietary or third-party software that is not covered by open source licensing terms. These items of software/software components are protected by copyright. The copyright powers of Miele and third parties must be respected.

In addition, the communication module contains software components which are distributed under open source licensing terms. The open source components contained in the appliance along with the corresponding copyright notices, copies of the licensing terms valid at the time, and any further information can be accessed locally via IP using a web browser *(http://<IP address>/Licenses)*, where <IP address> is the IP address of the appliance. The liability and warranty arrangements for the open source licences displayed in this location only apply in relation to the respective rights holders.

Operating hours

You can read off how many hours your washer-dryer has been in operation for.

Installation requirements

Low water pressure

If the water pressure is below 100 kPa (1 bar), the washer-dryer will stop the programme and a water intake fault message will appear.

If the on-site water pressure cannot be increased and the water pressure is constantly low, activating this setting will prevent the programme from being cancelled.

Factory default setting: Low water pressure is switched off.

Suds cooling

Additional water flows into the drum at the end of the main wash to cool the suds down. Hot suds can damage plastic drainage pipes.

Suds cooling takes place when a Cottons programme with a temperature of 70°C or higher is selected.

Activate suds cooling:

- to prevent the danger of scalding if the drain hose is hooked over the edge of a sink or laundry tub.
- where the drainage pipes are rated less than 70°C.

Factory default setting: Suds cooling is switched off.

Temperature reduction

At high altitudes water has a lower boiling point. Miele recommends activating the reduced temperature setting at altitudes of 2000 m or above to prevent water from boiling. The maximum temperature is reduced to 80°C even if a higher temperature is selected.

Factory default setting: the reduce temperature setting is switched off.

Factory default

Factory default

Any settings that have been altered will be reset to the factory default settings.

The language, time of day, network settings, favourite programmes and operating hours will not be reset.

Miele Australia Pty. Ltd.
ACN 005 635 398
ABN 96 005 635 398

Level 4, 141 Camberwell Road
Hawthorn East, VIC 3123

1300 464 353 (1300 4 MIELE)
info@miele.com.au
www.miele.com.au

Miele New Zealand Limited
IRD 98 463 631

8 College Hill
Freemans Bay, Auckland 1011

0800 464 353 (0800 4 MIELE)
customercare@miele.co.nz
www.miele.co.nz

Miele Global Headquarters
Germany
Miele & Cie. KG
Carl-Miele-Straße 29
33332 Gütersloh
Federal Republic of Germany

Miele

WTR 871 WPM

en-AU, NZ

M.-Nr. 12 959 300 / 00 / 002