Miele

Operating instructions for washing machines

To avoid the risk of accidents or damage to the machine, it is **essential** to read these instructions before it is installed and used for the first time.

en-AE

M.-Nr. 12 631 360

Contents

Warning and Safety instructions **5**
Operating the washing machine **10**
Control panel 10
How the control field works 11
Caring for the environment **12**
Before using for the first time **13**
Miele@home 14
1. Remove the transit bars 15
2. Setting up Miele@home 15
3. Commissioning TwinDos 16
4. Starting the calibration programme 17
Washing environmentally and economically **18**
1. Prepare the laundry **19**
2. Select a programme **20**
3. Load the washing machine **21**
4. Select programme settings **22**
5. Add detergent **23**
Degree of soiling of the laundry 24
Detergent dispenser drawer 24
CapDosing 26
6. Starting the programme **28**
Adding laundry during a programme sequence (AddLoad) 28
7. End of programme **29**
Spinning **30**
Delay start/SmartStart **31**
Programme chart **33**
Extra options **36**
Short 36
Pre-ironing 36
The following extra options can be selected in addition to the programmes 36
Garment care label symbols **37**
Programme sequence **38**
Changing the programme sequence **40**
Changing a programme (safety lock) 40
Cancelling a programme 40
Detergent **41**
The correct detergent 41
Water softeners 41
Dispensing aids 41
Fabric conditioner and liquid starch 41
Recommended Miele detergents 42
Recommended detergents in accordance with Directive (EU) Nr. 1015/2010 42
Replacing the TwinDos cartridge **43**

Contents

Cleaning and care **44**
Cleaning the external casing and the control panel 44
Cleaning the detergent dispenser drawer 44
Hygiene info(Cleaning the drum) 46
Cleaning the water inlet filter 46
TwinDos maintenance 47
Problem solving guide **48**
The programme does not start 48
The programme is cancelled and a fault indicator light lights up in the control panel 49
During the programme sequence, a symbol appears in the time display 50
At the end of the programme, an indicator light lights up in the control panel 51
Messages or faults with the TwinDos system 51
General problems with the washing machine 52
An unsatisfactory wash result 54
The door will not open 54
Opening the door in the event of a blocked drain outlet and/or power cut 55
Service **57**
Contact in case of malfunction 57
Optional accessories 57
Guarantee 57
Installation **58**
Front view 58
Rear view 59
Installation surface 60
Transporting the washing machine to its installation site 60
Removing the transit bars 61
Fitting the transit bars 62
Levelling the machine 63
Screwing out and adjusting the feet 63
Installing under a continuous worktop 64
Washer-dryer stack 64
The water protection system 65
Connection to the water supply 65
Connecting the water inlet hose 65
Water drainage 66
Fitting the elbow 67
Direct connection to a sink drain outlet 67
Electrical connection U.K. 68
Consumption data **69**
Note for test institutes 69
Selecting test programmes 69
Technical data **70**

Contents

Programmable functions **71**
Opening the programming level 71
Choosing and selecting a programmable function 71
Editing and saving a programmable function 72
Exit programming level 72
P11 Buzzer duration 72
P12 Buzzer 72
P13 Sensor tone 73
P14 Lock code 73
P22 Control panel switch-off status 73
P24 Memory 74
P26 Longer pre-wash Cottons 74
P28 Gentle action 74
P29 Reduce temperature 74
P32 Maximum rinse level 74
P33 Suds cooling 75
P34 Anti-crease 75
P49 Low water pressure 75
P62 Backlight brightness dimmed 75
P65 TwinDos 75
P66 UltraPhase 1 dispensing quantity 76
P67 UltraPhase 2 dispensing quantity 76
P68 TwinDos maintenance 76
P69 Degree of soiling 76
P90 Operating hours 76
P00 Factory default 76
Networking 77
P97 Remote control 77
P98 SmartGrid 77
P99 RemoteUpdate 78
Switching off WiFi 79
Copyrights and licences for the communication module 79
Detergents and care products **80**
Detergent 80
Specialist detergents 80
Fabric care 81
Additives 81
Machine care 81

⚠ This washing machine complies with current safety requirements. Inappropriate use can, however, lead to personal injury and damage to property.

To avoid the risk of accidents and damage to the machine, please read these instructions carefully before using it for the first time. They contain important information on its safety, use and maintenance.
Keep these instructions in a safe place and ensure that new users are familiar with the content. Pass them on to any future user.

Correct application

▶ This appliance is intended to be used in household and similar applications such as:

- staff kitchen areas in shops, offices and other working environments;
- farm houses;
- by clients in hotels, motels and other residential type environments;
- bed and breakfast type environments;
- areas for communal use in blocks of flats or in launderettes.

▶ The washing machine is not intended for outdoor use.

▶ It must be used only as a domestic appliance to wash items which are specified by the manufacturer as being washable on the wash care label. Miele cannot be held liable for damage resulting from incorrect or improper use or operation.

▶ The washing machine can only be used by people with reduced physical, sensory or mental capabilities, or lack of experience or knowledge, if they are supervised whilst using it or have been shown how to use it safely and recognise and understand the consequences of incorrect operation.

Safety with children

▶ Children under 8 years of age must be kept away from the washing machine unless they are constantly supervised.

▶ Children must not be allowed to clean or maintain the washing machine unsupervised.

▶ Children 8 years and older may only use the washing machine unsupervised if they have been shown how to use it safely and recognise and understand the consequences of incorrect operation.

▶ Please supervise children in the vicinity of the washing machine and do not let them play with it.

Technical safety

▶ Please observe the instructions in “Installation” and “Technical data”.

▶ Before setting up the washing machine, check it for any externally visible damage. Do not install or use a damaged machine.

▶ Before connecting the washing machine, ensure that the connection data on the data plate (fuse rating, voltage and frequency) match the mains electricity supply. If in any doubt, consult a qualified electrician.

▶ The electrical safety of this washing machine can only be guaranteed when correctly earthed.
It is essential that this standard safety requirement is met. If in any doubt, please have the wiring system of the building tested by a qualified electrician.
Miele cannot be held liable for the consequences of an inadequate earthing system (e.g. electric shock).

▶ Do not connect the washing machine to the mains electricity supply by a multi-socket adapter, extension lead or similar. These do not guarantee the required safety of the machine (fire hazard due to the risk of overheating).

▶ Faulty components must only be replaced by genuine Miele original spare parts. Only when these parts are fitted can Miele guarantee the safety standards of the machine.

▶ The electrical socket must be easily accessible after installation so that the machine can be disconnected from the electricity supply if necessary.

▶ If the electrical connection cable is faulty it must only be replaced by a Miele authorised technician to protect the user from danger.

▶ While the washing machine is under warranty, repairs should only be undertaken by a Miele authorised service technician. Otherwise the warranty will be invalidated.

▶ Unauthorised repairs could result in unforeseen dangers for the user, for which the manufacturer cannot accept liability. Repairs should only be undertaken by a Miele authorised technician, otherwise any subsequent damage will not be covered by the warranty.

▶ In areas which may be subject to infestation by cockroaches or other vermin, pay particular attention to keeping the machine and its surroundings in a clean condition at all times. Any damage which may be caused by cockroaches or other vermin will not be covered by the warranty.

▶ The machine must not be used in a non-stationary location (e.g. on a ship).

▶ Do not make any alterations to the machine, unless authorised to do so by Miele.

▶ The machine must be isolated from the electricity supply when cleaning and maintaining the machine and in the event of a fault.

▶ The machine must only be connected to the on-site water supply using a new hose kit. Old hose kits must not be re-used. Check the condition of the hoses regularly so that you can replace them in good time and avoid the risk of any water damage.

▶ The water flow pressure must be at least 100 kPa and should not exceed 1000 kPa.

▶ Temporary or permanent operation on an autonomous power supply system or a power supply system that is not synchronised with the mains power supply (e.g. island networks, back-up systems) is possible. A prerequisite for operation is that the power supply system complies with the specifications of EN 50160 or an equivalent standard.
The function and operation of the protective measures provided in the domestic electrical installation and in this Miele product must also be maintained in isolated operation or in operation that is not synchronised with the mains power supply, or these measures must be replaced by equivalent measures in the installation. As described, for example, in the current version of BS OHSAS 18001–2 ISO 45001.

Correct use

▶ Do not install the washing machine in a room where there is a risk of frost. Frozen hoses may burst or split. The reliability of the electronic control unit may be impaired at temperatures below freezing point.

▶ Before using the machine for the first time, check that the transit bars at the rear of the machine have been removed (see “Installation - Removing the transit bars”). During spinning, a transit bar which is still in place may result in damage to both the machine and adjacent furniture or appliances.

▶ Turn off the stopcock if the machine is to be left for any length of time (e.g. holiday), especially if there is no floor drain (gully) in the immediate vicinity.

▶ Flooding danger.
If hooking the drain hose into a wash basin, check that the water can drain off quickly enough to prevent the sink from overflowing. Make sure the drain hose is secure, so that the force of the water flowing out of the hose does not dislodge it.

▶ Take care to ensure that foreign objects (e.g. nails, pins, coins, paper clips) do not find their way into the machine with the laundry. These may damage components of the machine (e.g. suds container, drum), which in turn can result in damage to the laundry.

▶ Take care when opening the drum door after using the steam function. Danger of burning due to escaping steam and the high temperature of the surface of the drum as well as the porthole glass. Stand back away from the machine and wait until the steam has dissipated.

▶ The maximum load for this washing machine is 8.0 kg (dry weight). See the “Programme chart” for the maximum recommended loads for individual programmes.

▶ Do not use solvent based cleaning agents, e.g. those containing benzine, in this machine, as this may result in damage to component parts and create toxic fumes. Such agents also pose a fire and explosion hazard.

▶ Textiles which have been pre-treated in solvent based cleaning agents must be thoroughly rinsed in clean water before being washed in the machine.

▶ If the correct amount of detergent is dispensed, the machine should not need to be descaled. If, however, you do wish to descale it, only use a proprietary natural citric acid based descaling agent. Miele recommends using Miele descaling agent which is available to order from your Miele dealer. Strictly observe the instructions on the packaging.

▶ Do not use solvent based cleaning agents, e.g. those containing benzine, to clean the surfaces of the machine. They can cause damage to plastic surfaces.

▶ Only use dyes specified by the manufacturer as being suitable for use in a domestic washing machine. Always observe the manufacturer's instructions carefully.

▶ Colour run and dye removers contain sulphur compounds which can cause damage such as corrosion. Do not use these products in this machine.

▶ If detergent comes into contact with the eyes, rinse them thoroughly with lukewarm water immediately. If swallowed, seek medical assistance immediately and retain the packaging or label for reference. Those with skin problems or sensitive skin should avoid their skin coming into contact with detergent.

Accessories and spare parts

▶ Only use original Miele accessories. If other parts are used, warranty, performance and product liability claims will be invalidated.

▶ A Miele tumble dryer can be stacked on top of a Miele washing machine using the appropriate stacking kit (available as an optional accessory). Please make sure you order the correct one for the Miele washing machine and Miele tumble dryer.

▶ If installing the machine on a Miele plinth, (available as an optional accessory, depending on country), please make sure you order the correct one for this washing machine.

▶ Miele will guarantee to supply functional spare parts for a minimum of 10 years and up to 15 years following the discontinuation of your washing machine.

Miele cannot be held liable for damage caused by non-compliance with these Warning and Safety instructions.

Operating the washing machine

Control panel

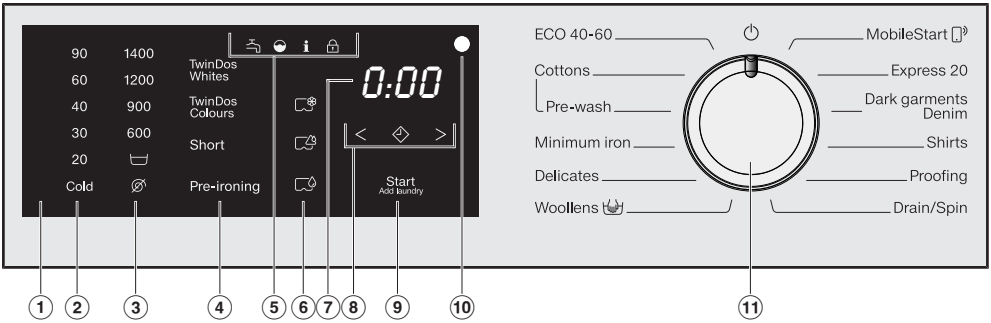

① **Control field**
The control field consists of a time display and various sensor controls. The individual sensor controls are explained in the following sections.

② **Sensor controls – temperature**
for selecting the temperature.

③ **Sensor controls – spin speeds**
for selecting the spin speed.

④ **Sensor controls for TwinDos and extra options**
You can activate TwinDos dispensing for a wash programme and add extra options to the programme.
When a wash programme is selected, the sensor controls for the TwinDos dispensing option and extra options light up dimly.

⑤ **Indicator lights**

Lights up if there are faults affecting the water inlet and drainage.

Lights up if excess detergent was used.

Lights up together with *1* in the time display as a reminder about hygiene information.

Lights up together with *2* in the time display as a reminder about TwinDos cleaning.

The *Add laundry* function cannot be selected.

⑥ **Sensor controls – CapDosing**

CapDosing of fabric care products (e.g. fabric conditioner, proofing agent)

CapDosing of additives (e.g. detergent enhancer)

CapDosing of detergent (for the main wash only)

⑦ **Time display**
After the programme has started, the programme duration will appear in the display in hours and minutes.
When Delay start is being used, the programme duration will appear after the Delay start time has elapsed.

⑧ **Sensor controls** < ◈ >
The Delay start time selected will appear in the time display.
After the programme has started, the Delay start time will begin to count down.
Once the Delay start time has elapsed, the programme begins and the estimated programme duration appears on the time display.

◈ After touching the ◈ sensor control, a later start time for the programme (Delay start) can be selected. Once selected, ◈ lights up brightly.

> The duration of the Delay start period is increased by touching the > sensor control.

< The duration of the Delay start period is reduced by touching the < sensor control.

⑨ **Start/Add laundry sensor control**

Ⓐ The programme can be started as soon as the sensor control is flashing on and off. Touching the *Start/Add laundry* sensor control starts the selected programme. The sensor control lights up constantly.

Ⓑ Once the programme has been started, the *Start/Add laundry* sensor control allows you to add laundry.

⑩ **Optical interface**
This is used by your Miele dealer as a transmission point.

⑪ **Programme selector**
for selecting programmes and for switching off the appliance. The washing machine is switched on when you select a programme, and switched off by turning the programme selector to the ⏻ position.

How the control field works

The ②, ③, ④, ⑥, ⑧ and ⑨ sensor controls react to fingertip contact. If a sensor control is illuminated, it can be selected.

If a sensor is brightly lit, this means: currently selected

If a sensor is dimly lit, this means: it can be selected

Caring for the environment

Disposing of the packaging material

The packaging material is used for handling and protects the appliance from transport damage. The packaging material used is selected from materials which are environmentally friendly for disposal and can generally be recycled.

Recycling the packaging material reduces the use of raw materials. Your Miele dealer will take the packaging material away.

Disposal of your old appliance

Electrical and electronic appliances often contain valuable materials. They also contain materials which, if handled or disposed of incorrectly, could be potentially hazardous to human health and to the environment. They are, however, essential for the correct functioning of your appliance. Please do not therefore dispose of it with your household waste.

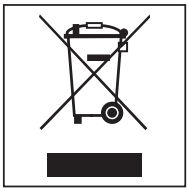

Please contact your Miele dealer. They will provide support for its disposal.

Ensure that it presents no danger to children while being stored for disposal.

⚠ Damage resulting from incorrect installation and connection.
Installing and connecting the washing machine incorrectly will cause serious property damage.
See “Installation”.

Removing the protective foil and stickers

■ Remove:

- Any protective film from the door
- Any stickers from the front and the lid

Please do not remove any labels (e.g. the data plate) which are visible when you open the door.

Remove the detergent cartridges and the drain hose elbow from the drum

Two detergent cartridges for automatic detergent dispensing and an elbow piece for the drain hose are stored in the drum.

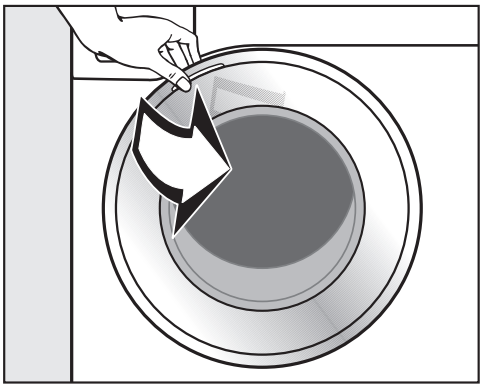

■ Pull open the door.

■ Take the two cartridges and the elbow piece out of the drum.

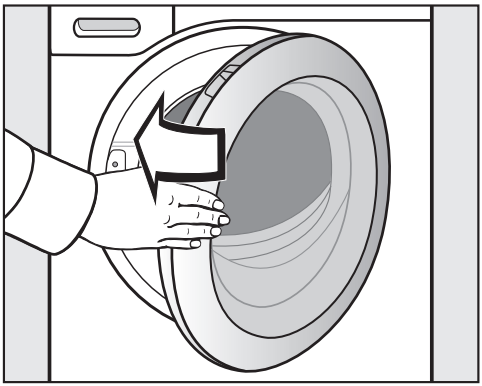

■ Shut the door with a gentle swing.

This washing machine has undergone a complete functional test at the factory and there will be some residual water in the drum from this process.

Miele@home

Your washing machine is equipped with an integrated WiFi module.

In order to use it you need:

- a WiFi network
- the Miele@mobile App
- a Miele user account. The user account can be created via the Miele@mobile App.

The Miele@mobile App will guide you as you connect your washing machine to your home WiFi network.

Once your washing machine is connected to your WiFi network you can use the App, for example, to carry the following activities:

- Operate your washing machine remotely
- Access information about the operating status of your washing machine
- Access information about a programme sequence on your washing machine

Connecting your washing machine to your WiFi network will increase energy consumption, even when the washing machine is switched off.

Before installing the washing machine in its final location, ensure the signal strength is sufficient for your WiFi network.

Availability of the WiFi connection

The WiFi connection shares a frequency range with other appliances (including microwave ovens and remote control toys). This can give rise to sporadic or even complete connection failures. Therefore, the availability of featured functions cannot be guaranteed.

Miele@home availability

The ability to use the Miele app depends on the availability of the Miele@home service in your country.

The Miele@home service is not available in every country.

For information about availability, please visit www.miele.com.

Miele App

The Miele App is available to download free of charge from the Apple App Store® or from the Google Play Store™.

1. Remove the transit bars

⚠ Damage resulting from failure to remove the transit bars.
Failure to remove the transit bars can result in damage to the washing machine and to adjacent cabinetry or appliances.
Remove the transit bars as described in “Installation and connection”.

2. Setting up Miele@home

There are 2 ways of connecting:

1. Via the Miele app (default)
2. Via WPS
   To do so, you will need a WPS-compatible router.

Logging in via the Miele app

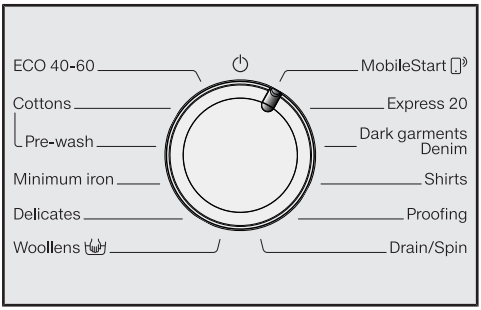

- Turn the programme selector to the *MobileStart* programme.

APP appears on the time display and the timeout starts to count down from 10 minutes. The Miele app will guide you through the remaining steps.

When you have successfully connected, *Con* will appear on the time display.

Logging in via WPS

- Turn the programme selector to the *MobileStart* programme.
- Touch the sensor control until *WPS* appears on the time display and a short keypad tone sounds.

The timeout then starts to count down from 2 minutes on the time display.

- Activate the WPS function on your router within 2 minutes.

When you have successfully connected, *Con* will appear on the time display.

Tip: If the connection has not been set up when the timeout has finished counting down, repeat the process.

3. Commissioning TwinDos

The TwinDos system can only be operated with the Miele UltraPhase 1 and UltraPhase 2 detergent cartridges. It is not possible to use any other detergent in the TwinDos system.

The dispensing quantities for UltraPhase 1 and UltraPhase 2 are preset for water hardness level II in the factory default settings.

You can change the dispensing quantity. See the “Programmable functions” chapter, “TwinDos” section.

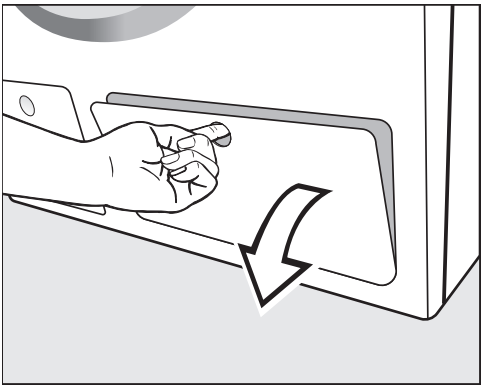

■ Open the access panel for TwinDos.

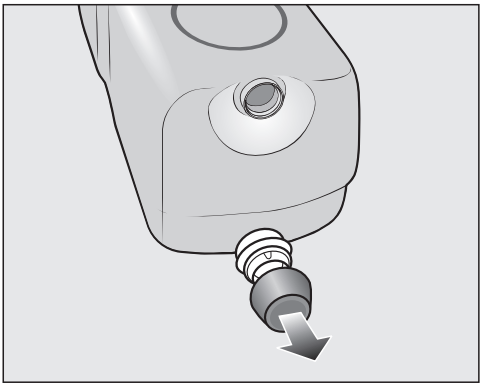

■ Remove the cover caps from the detergent cartridges included with the delivery.

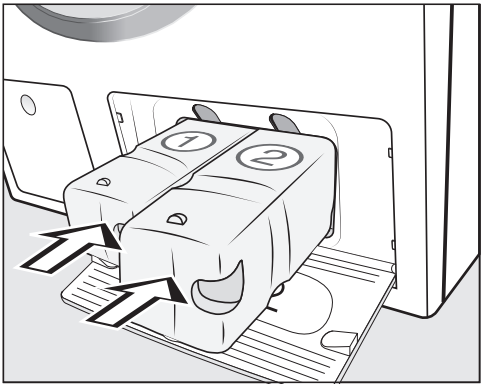

■ Push the detergent cartridge for UltraPhase 1 into compartment 1 and the detergent cartridge for UltraPhase 2 into compartment 2.

■ Close the TwinDos access panel.

4. Starting the calibration programme

For optimum water and energy consumption and excellent wash results, it is important to calibrate the washing machine.

To do this, the *Cottons* programme **must** be run without laundry and without detergent.

- Open the stopcock.

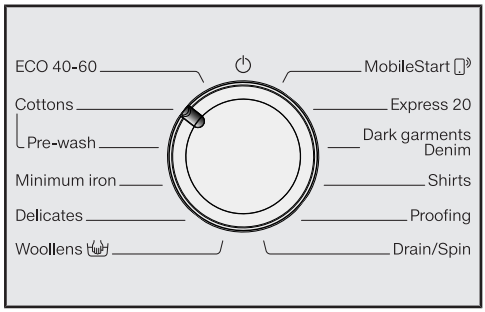

- Turn the programme selector to the *Cottons* position.

The washing machine is now switched on and the temperature *40* and spin speed *1400* light up.

- Touch the *Start/Add laundry* sensor control.

The wash programme will start.

After 10 minutes, the indicators dim.

Opening the door at the end of the programme

The door remains locked during the anti-crease phase. The control field lights up for the first 10 minutes. The control field then goes out and the *Start/Add laundry* sensor control flashes.

- Turn the programme selector to the ⏻ position.

-0- appears on the timer display and the 🔒 indicator light goes out.

The door unlocks.

Tip: After the anti-crease phase, the washing machine will have switched off and the door unlocked automatically. The control field will be completely dark.

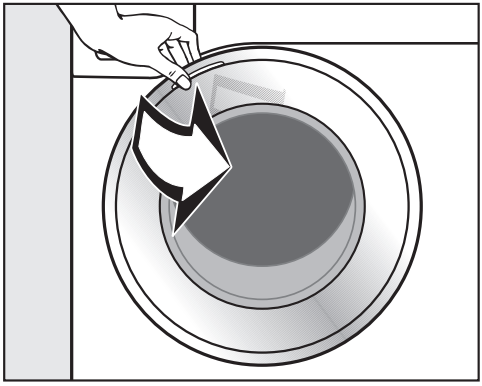

- Take hold of the door and pull it open.

Tip: Leave the door slightly open to allow the drum to dry.

Initial commissioning is now complete.

Energy and water consumption

- To get the most out of your machine, load the maximum dry load size for the wash programme you are using. This will keep the energy and water consumption to a minimum in relation to the size of the load.
- Programmes that are more efficient with regard to energy and water consumption generally have a longer running time. By extending the programme running time, the wash temperature that is actually reached can be reduced while still providing the same wash results.

  For example, the ECO 40-60 programme has a longer running time than the Cottons 40 °C or 60 °C programme. The ECO 40-60 programme is more efficient in terms of energy and water consumption but has a longer running time.
- Use the Express 20 programme for small, lightly soiled loads.
- Modern detergents make it possible to wash at lower temperatures (e.g. 20 °C). Using lower temperature settings will save energy.

Information about subsequent tumble drying

The spin speed selected affects the residual moisture in the laundry and the sound emissions of the washing machine.

The higher the spin speed, the lower the residual moisture in the laundry. However, the sound emissions of the washing machine will increase.

Select the highest possible spin speed for the wash programme to save energy in the subsequent tumble dryer cycle.

Hygiene in the washing machine

Washing at low temperatures and/or using liquid detergents can cause bacteria and odours to build up in the washing machine. Miele therefore recommends cleaning the washing machine once every month.

When the **i** indicator light lights up and *1* appears on the time display, the washing machine must be cleaned.

Detergent

- For precise dispensing use automatic detergent dispensing.
- Adjust the dosage to the degree of soiling of the laundry.
- Do not exceed the amounts of detergent recommended by the manufacturer on the packaging.

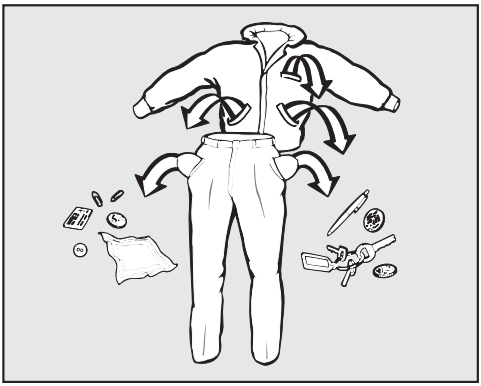

- Empty all pockets.

⚠ Damage due to foreign objects.
Nails, coins, paper clips, and so on can cause damage to garments and components in the machine.
Check the laundry before washing and remove any foreign objects.

Sort the laundry

- Sort the laundry by colour and by care label. Most garments have a textile care label in the collar or side seam.

Tip: Dark textiles often contain excess dye and should be washed separately several times before being included in a mixed load. Always wash whites and coloureds separately.

Pre-treating stains

- Badly soiled areas and stains should be cleaned as soon as possible, preferably whilst still fresh. Spillages should be carefully dabbed off using a soft, colourfast cloth. Do not rub.

Tip: Stains (e.g. blood, egg, coffee, tea) can be pre-treated using some handy tricks which can be found in the Miele guide to laundry care.

⚠ Damage due to solvent-based cleaning agents
Cleaning agents containing benzine, stain remover, etc., can damage plastic parts.
When pre-treating textiles, make sure that any plastic parts (e.g. buttons) do not come into contact with cleaning agent.

⚠ Risk of explosion due to solvent-based cleaning agents.
When using solvent-based cleaning agents, an explosive mixture may develop.
Never use solvent-based cleaning agents in the washing machine.

General tips

- Curtains: remove rollers and lead weights or place in a laundry bag.
- Sew in or remove any loose underwiring in bras.
- Close any zips, attach velcro fasteners, fasten hooks and eyes, etc. before washing.
- Fasten duvet covers and pillow cases to prevent small items from becoming rolled up inside them.

Do not wash items which are specified by the manufacturer as **not washable** according to the symbol on the care label (symbol).

Switching on the washing machine

- Turn the programme selector to a programme.

1. Selecting wash programmes using the programme selector

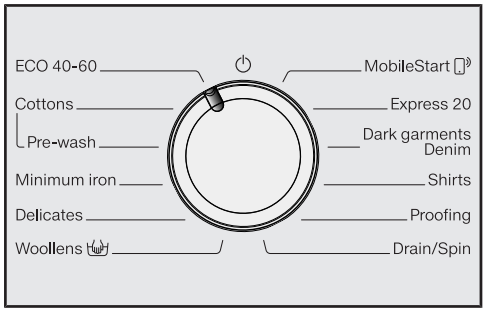

- Turn the programme selector to the required programme.

The programme running time appears on the time display.

2. Selecting programmes using the MobileStart programme selector position and the Miele app

Tip: To use *MobileStart*, the washing machine must be logged on to the WiFi network and *Remote control* must be switched on.

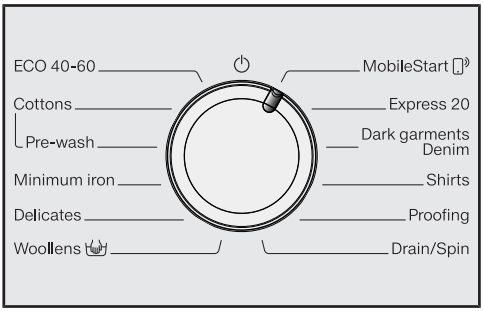

- Turn the programme selector to the *MobileStart* position.

Con appears on the time display.

Once the programme has started, the washing machine can be operated with the Miele app.

You must touch the *Start/Add laundry* sensor control to enable operation via the Miele app. Touching the sensor control also locks the door of the washing machine.

Open the door

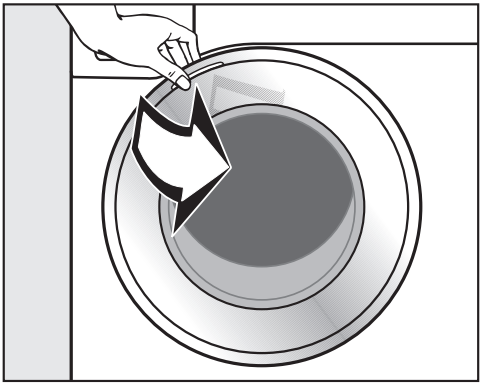

■ Take hold of the door and pull it open.

Check the drum for pets or foreign objects before loading it with laundry.

The most efficient use of energy and water is achieved when a full load is washed. However, do not overload as this makes cleaning less effective and causes creases.

■ Unfold the laundry and load loosely into the drum.

Mixing both large and small items gives better wash results and also helps to distribute the load evenly during spinning.

Tip: Please note the maximum load size for different wash programmes.

Close the door

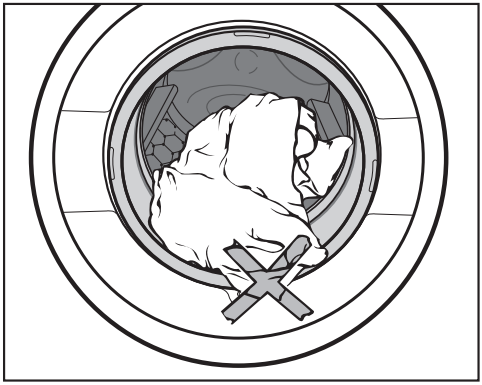

■ Make sure that no items are caught between the door and the seal.

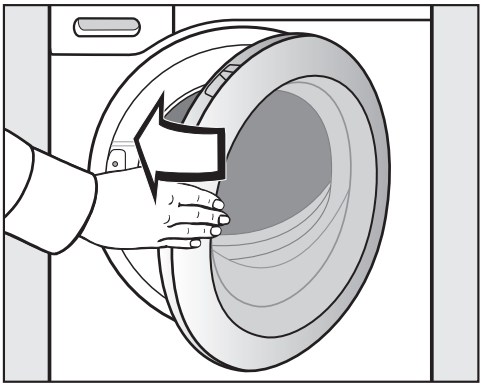

■ Shut the door with a gentle swing.

4. Select programme settings

Selecting a temperature and spin speed

The wash programme's preset temperature and spin speed light up brightly. The choice of available temperatures and spin speeds for the wash programme light up dimmed.

The temperatures reached inside the washing machine might not be the same as the temperatures selected. Perfect wash results are achieved through a combination of energy use and wash duration.

- Touch the sensor for the desired temperature. It will then light up brightly.
- Touch the sensor for the desired spin speed. It will then light up brightly.

Selecting Extras

The selection of extras available for the wash programme lights up dimly.

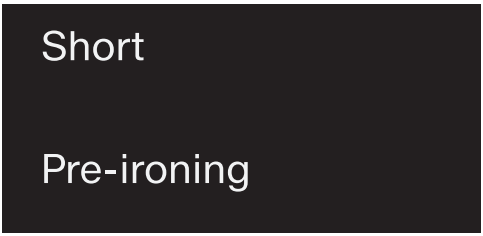

- Touch the sensor for the extra you want. It then lights up brightly.

Tip: You can select multiple extras for a wash programme.

Please refer to "Extras" for more information.

Switching on Delay start/ SmartStart

The start of the programme can be delayed from 30 minutes up to 24 hours. This allows you to make use of night-time economy electricity rates, for example (see the "Delay start/ SmartStart" chapter).

There are several options for adding detergent.

The washing machine has the TwinDos system.

TwinDos has to be activated as described in “Before using for the first time”.

The TwinDos system can only be operated with the Miele UltraPhase 1 and UltraPhase 2 detergents.

How UltraPhase 1 and UltraPhase 2 work

UltraPhase 1 is a liquid detergent which dissolves dirt and removes the most common stains. UltraPhase 2 is a bleaching agent and removes stubborn stains. For the best washing result, these two agents are dispensed at separate times during the washing process. UltraPhase 1 and UltraPhase 2 clean white and coloured fabrics thoroughly. UltraPhase 1 and UltraPhase 2 single-use cartridges are available to order from your Miele dealer.

Activating TwinDos dispensing

TwinDos dispensing is automatically activated for all programmes in which dispensing is possible.

The *TwinDos colours* sensor control lights up. The *Twin Dos whites* sensor control lights up dimly in certain wash programmes.

Tip: The detergent dispensing quantities are preset. If too much foam builds up, you can reduce the dispensing quantities using the *P66* and *P67* programmable functions.

Changing TwinDos dispensing

You can change the suggested colour composition of the laundry.

- *TwinDosWhites* sensor control for white or light fabrics
- *TwinDosColours* sensor control for colour fabrics

The brightly lit sensor control is activated.

■ Touch the *TwinDosWhites* sensor control if required.

Deactivating TwinDos dispensing

■ Touch the brightly lit *Twin Dos whites* or *TwinDos colours* sensor control.

Both sensor controls light up dimly and dispensing is deactivated.

5. Add detergent

Degree of soiling of the laundry

There are 3 different degrees of soiling.

The quantity of detergent dispensed via TwinDos and the quantity of water required for rinsing are preset for the **normal** degree of soiling.

- Light
  No visible soiling or stains
- Normal
  Visibly soiled and/or just a few slight stains.
- Heavy
  Heavily soiled and/or clearly visible stains.

Tip: You can change the default degree of soiling using the *P69* programmable function.

Using other methods to remove stains

If you wish to use additional methods of stain removal, you have the following options:

- Using the Booster cap and activating the CapDosing.
- Add stain remover to the II compartment.

Detergent dispenser drawer

Any detergent suitable for automatic front loading washing machines can be used. Please observe the instructions for use and dosage on the detergent packaging.

Ensure that TwinDos dispensing is deactivated.

Adding detergent

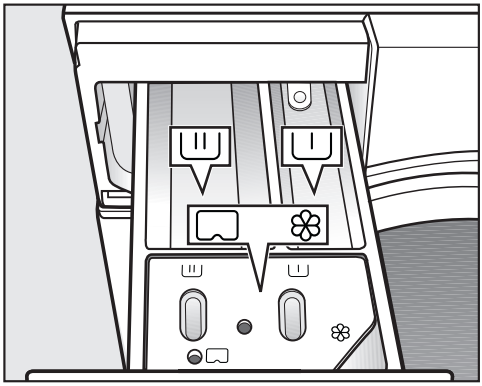

■ Pull out the detergent drawer and add detergent to the compartments.

I Detergent for the pre-wash

II Detergent for the main wash

❀ Fabric conditioner, liquid starch or capsules

Adding fabric conditioner

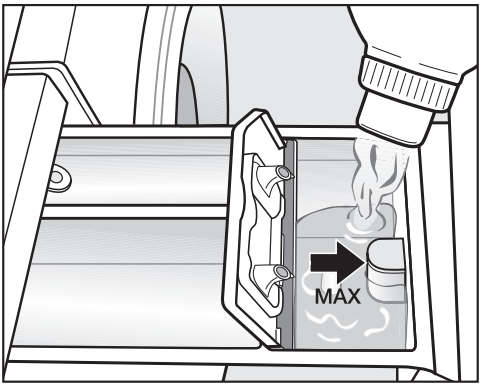

- Add fabric conditioner or liquid starch to the ❀ compartment. **Do not exceed the maximum level mark.**

It will be automatically dispensed in the final rinse. At the end of the programme a small amount of water remains in the ❀ compartment.

If starching frequently, thoroughly clean the dispenser compartment, especially the siphon tube, regularly.

Using liquid detergent with a pre-wash

Liquid detergent cannot be used for the main wash if the pre-wash has been selected.

Use TwinDos dispensing if you are activating the pre-wash.

Using detergent tablets or pods

Always put detergent tablets or pods directly in the drum with the laundry. They cannot be added via the detergent dispenser drawer.

Tips on dosing

Adjust the detergent dosage to the level of soiling of the laundry and the size of the load. Reduce the amount of detergent with smaller loads (e.g. reduce the amount of detergent by ⅓ when washing a half load).

Too little detergent:

- Results in laundry not being cleaned properly and may cause it to become grey and hard to the touch over time.
- Can lead to a build-up of mould in the washing machine.
- Results in grease not being completely removed from the laundry.
- Can lead to limescale deposits on the heater elements.

Too much detergent

- Causes poor wash, rinse, and spin results.
- Causes higher water consumption as an extra rinse cycle is automatically activated.
- Is a greater burden on the environment.

5. Add detergent

CapDosing

Three different types of capsule are available:

- ❀ = Fabric care (e.g. fabric conditioner, proofing agent)
- = Additives (e.g. detergent enhancer)
- = Detergent (for the main wash only)

Each capsule contains the correct amount for one wash cycle.

You can order the capsules from your Miele dealer (see the end of this booklet for contact details).

⚠ Capsules pose a health risk.
The ingredients of capsules can be hazardous to health if they are swallowed or come into contact with skin.
Keep capsules out of the reach of children.

Activating CapDosing

■ Touch the sensor for the capsule you want to use.

Sensor control		Capsule
❀	for	❀
	for	
	for	

Inserting a capsule

■ Open the detergent dispenser drawer.

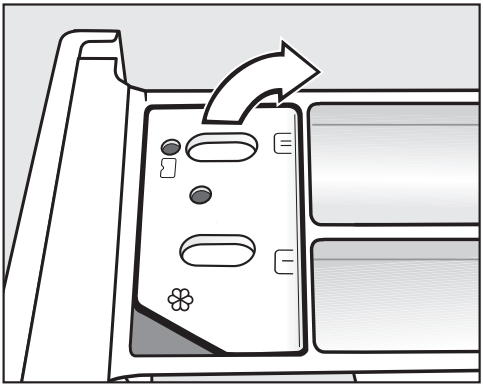

■ Open the lid of the ❀/ compartment.

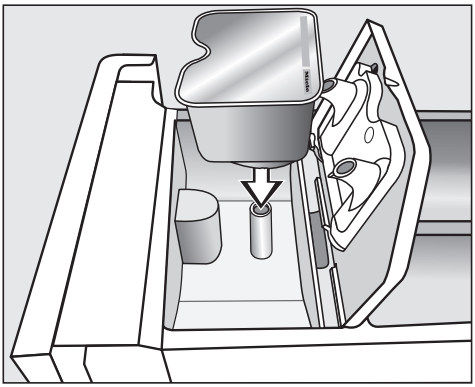

■ Press the capsule in firmly.

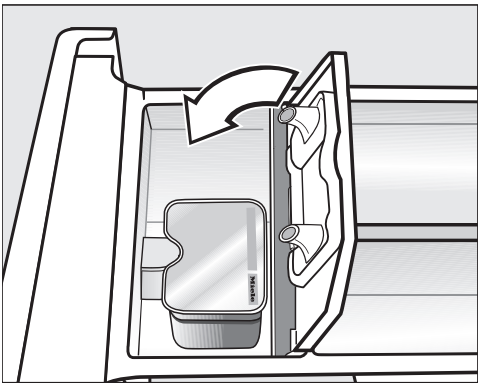

- Close the lid and press it firmly shut.
- Close the detergent dispenser drawer.

Tip: TwinDos dispensing is switched off automatically when a capsule is selected for the main wash. The indicator for TwinDos dispensing remains visible in the control field.

The capsule is opened by the act of inserting it in the detergent dispenser drawer. The contents can run out of the capsule if you then remove it from the drawer before it is used.
Dispose of opened capsules.

The wash programme will dispense the contents of the capsule at the correct time.

Water intake to the ❀ compartment is solely via the capsule.
Do not add any additional fabric conditioner to the ❀ compartment.

- Remove the empty capsule at the end of the programme.

For technical reasons a small amount of water will remain in the capsule.

Switching off/changing CapDosing

- In order to switch off CapDosing, touch the brightly lit sensor.
- In order to change CapDosing, touch one of the other capsule sensors.

6. Starting the programme

Starting a programme

■ Touch the flashing *Start/Add laundry* sensor control.

The door locks and the programme starts.

If a Delay start time has been selected, this counts down on the time display. At the end of the Delay start time or immediately after the programme has started, the programme duration appears on the time display.

Energy savings

After 10 minutes, the indicators dim. The sensor control *Start/Add laundry* flashes.

To reactivate the indicators:

■ Touch the *Start/Add laundry* sensor control (this does not have any effect on a programme that is running).

Adding laundry during a programme sequence (AddLoad)

Laundry can be added or removed at any time, provided that the 🔒 symbol is not illuminated on the control field.

■ Touch the *Start/Add laundry* sensor control.

Rotating bars ⁻ ... _ ... ‾ are shown in the time display.

If the word *Add* appears on the time display, the door can be opened.

■ Open the door and add or remove laundry.

■ Close the door.

■ Touch the *Start/Add laundry* sensor control.

The wash programme will continue.

Laundry cannot usually be added or removed if:

- The suds temperature is above 55 °C
- The water inside the drum is above a certain level

Opening the door and removing the laundry

The door remains locked during the anti-crease phase. The control field lights up for the first 10 minutes. The control field then goes out and the *Start*/*Add laundry* sensor control flashes.

- Turn the programme selector to the ⏻ position.

-0- appears on the timer display and the 🔓 indicator light goes out.

The door unlocks.

Tip: After the anti-crease phase, the door will have unlocked automatically.

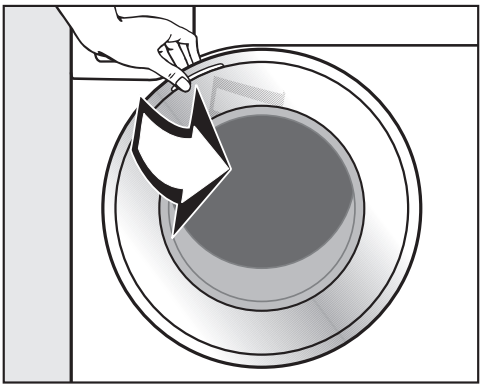

- Take hold of the door and pull it open.
- Remove the laundry.

Items left in the drum could discolour other items in the next wash or become discoloured themselves.
Remove all items from the drum.

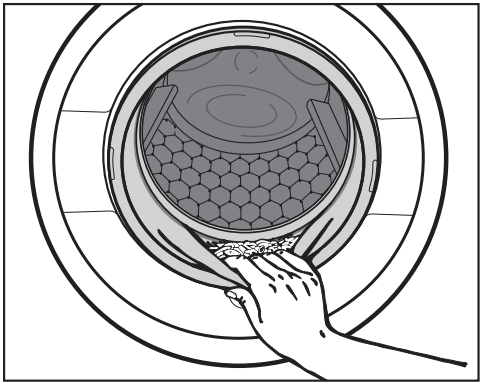

- Check the door sealing ring for any foreign objects.

Tip: Leave the door slightly open to allow the drum to dry.

- If applicable, remove the used capsule from the detergent drawer.

Tip: Leave the detergent drawer slightly open to allow it to dry.

Final spin speed in wash programmes

When a programme is selected, the sensor control for the optimum spin speed for that programme will be brightly lit up in the control field.

A faster spin speed can be selected for certain wash programmes.

The highest selectable spin speed is indicated in the table.

Programme	rpm
ECO 40-60	1400
Cottons	1400
Minimum iron	1200
Delicates	900
Woollens	1200
Express 20	1200
Dark garments/Denim	1200
Shirts	900
Proofing	1200
Drain/Spin	1400

Rinse and interim spin

There is a spin after the main wash and between the rinses. A reduction in the final spin speed will also reduce the interim spin speed. If a spin speed of less than 700 rpm is selected for the *Cottons* programme, an additional rinse is introduced.

Selecting Rinse hold (final spin)

- Touch the sensor control (Rinse hold).

The laundry is not spun after the final rinse and remains in the rinse water. This helps to prevent creasing if the laundry is not going to be removed from the drum immediately after the end of the programme.

Ending a programme with a spin cycle

The sensor control for the optimum spin speed lights up on the control field. You can change the spin speed.

- Touch the *Start/Add laundry* sensor control.

Ending a programme without a spin cycle

- Reduce the spin speed to 0.
- Touch the *Start/Add laundry* sensor control.

To omit rinse and interim spin and the final spin

- Touch the sensor.

After the last rinse, the water will be pumped away and the anti-crease phase will switch in.

In some programmes an additional rinse is introduced with this setting.

Delay start

With the Delay start function, you can delay the start of the programme.

This function is active when the P98 SmartGrid programmable function is switched off.

You can delay the start of a programme from 30 minutes up to a maximum of 24 hours. This allows you to make use of night-time economy electricity rates, for example.

Selecting Delay start

- Select the programme required.
- Touch the sensor control.

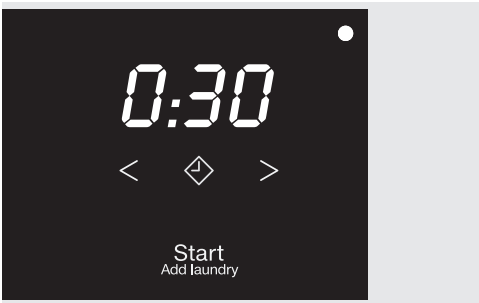

The sensor control lights up brightly.

- Touch the < or > sensor control repeatedly until the required Delay start time appears on the time display.

- In the case of settings below 10 hours, the Delay start time changes in increments of 30 minutes
- In the case of settings above 10 hours, the Delay start time changes in increments of 1 hour

Starting Delay start

- Touch the flashing *Start/Add laundry* sensor control.

The Delay start process starts and counts down on the time display.

Changing or cancelling a started Delay start

If the selected Delay start function has started, it is no longer possible to change the time.

- Turn the programme selector to the ⏻ position.
- Turn the programme selector to any programme.

Rotating bars L⁻⁻J... C_J ... C⁻⁻J or -0- are shown on the time display.

The door lock is released.

- Select a programme and a new Delay start time.

SmartStart

The SmartStart function lets you define a time period during which your washing machine will start automatically based on an external signal. The appliance will start on receipt of a signal, e.g. from your energy supplier, that indicates that the electricity tariff is particularly economical.

This function is active when the *P98* SmartGrid programmable function is switched on.

The time period can be defined between 30 minutes and 24 hours. During this period, the washing machine waits for the external signal. If no signal is sent during the defined period, the washing machine starts the wash programme.

Setting the time period

If the *P98* SmartGrid programming function is activated, the function of the ⏲ sensor control changes. The time display no longer shows the delay start period, and instead shows the time period in which your washing machine can be started automatically (see the “Programmable functions” chapter, “*P98* SmartGrid” section).

The procedure for setting this is the same as for setting the delay start time.

- Touch the ⏲ sensor control.
- Set the time period you want using the < or > sensor controls.
- Touch the Start/Add laundry sensor control.

CLr appears on the time display.

ECO 40-60	**Max. load 8.0 kg**
Items	For normally soiled cotton garments
Tip	A laundry load consisting of mixed cottons that are intended for washing at 40 °C or 60 °C can be washed in the same wash cycle. This programme is the most efficient in terms of energy and water consumption for washing cottons.

Note for test institutes:

Test programme for compliance with EU legislation regarding ecodesign No. 2019/2023 and energy labelling in accordance with Regulation No. 2019/2014.

TwinDos dispensing must be deactivated when carrying out comparison tests.

Note for test institutes:

For test programmes that conform to SASO 2692/2007, SASO 2693/2007 and SASO 2683/2007, change the following settings:

In the temperature display, temperatures 60 and 40 light up dimly.

- Touch the sensor control 60 for the Cottons 60°C test programme. Temperature 60 lights up brightly.

TwinDos dispensing must be deactivated when carrying out comparison tests.

Cottons	**Cold to 90 °C**	**Max. load 8.0 kg**
Items	Cotton, linen or mixed fibre fabric, e.g. table linen, towelling, underwear, T-shirts, etc.	
Tip	Where particularly high levels of hygiene are required, please select a temperature of 60 °C or higher. If you want to select a pre-wash programme, turn the programme selector to *With pre-wash*.	

Minimum iron	**Cold to 60 °C**	**Max. load 3.5 kg**
Items	Synthetic and mixed fibre textiles as well as easy care cotton	
Tip	Reduce the spin speed for fabric that creases easily.	

Programme chart

Delicates	**Cold to 40 °C**	**Max. load 2.0 kg**
Items	Delicate garments made from synthetic fibre, mixed fibre and viscose Performance outerwear (e.g. jackets and trousers) made from membrane fabric such as Gore-Tex®, SYMPATEX®, WINDSTOPPER®, etc. Curtains specified as machine-washable by the manufacturer.	
Tip	- On outdoor clothing, fasten zips or close Velcro fasteners and do not use fabric conditioner. - If required, these items can also be re-proofed using the *Proofing* programme. Proofing after each wash cycle is not recommended. - Deselect the spin speed for items which crease easily.	
Woollens	**Cold to 40 °C**	**Max. load 2.0 kg**
Items	Wool or wool blend fabric	
Tip	Reduce the spin speed for fabric that creases easily.	
MobileStart		
The Miele app is used for selecting programmes and operating the appliance.		
Express 20	**Cold to 40 °C**	**Max. load 3.5 kg**
Items	Cotton garments that have hardly been worn or are only very lightly soiled	
Tip	The *Short* extra option is activated automatically.	
Dark garments/Denim	**Cold to 60 °C**	**Max. load 3.0 kg**
Items	Black and dark items made of cotton, mixed fibre or denim	
Tip	- Wash inside out. - Denim often contains excess dye and may run during the first few washes. Therefore, wash light and coloured items separately.	
Shirts	**Cold to 60 °C**	**Max. load 1.0 kg/2.0 kg**
Items	Shirts and blouses made of cotton and mixed fibre	
Tip	- Pre-treat collars and cuffs depending on the level of soiling. - Wash silk shirts and blouses in the *Delicates* programme. - If the preset *Pre-ironing* extra is switched off, the maximum load capacity is increased to 2.0 kg.	

Proofing	**40 °C**	**Max. load 2.5 kg**
Items	Treating microfibre fabric, ski wear or table linen made from mainly synthetic fibres to provide a finish which is resistant to water and dirt	
Tip	- The items must be freshly laundered and spun or dried before proofing. - For best results, the items should be heat-treated afterwards. This can be achieved by drying them in the tumble dryer or ironing them.	
Drain/Spin		**–**
Tip	- Drain only: Set spin speed to ⌀. - Make sure you select the appropriate spin speed.	

Extra options

You can use the extra options buttons to augment the wash programmes.

Selecting extra options

Extra options are selected and deselected using the relevant sensor buttons on the control field.

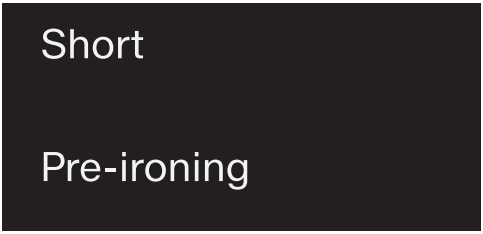

- Touch the sensor control for the extra option you want.

The relevant sensor will light up brightly.

Not all extra options can be selected with every wash programme.

If the sensor control lighting is switched off, this means the extra option cannot be selected. The extra option cannot be activated by touch.

Short

For textiles with light soiling with no visible staining.

The wash duration is reduced.

Pre-ironing

In order to reduce creasing, the laundry undergoes a smoothing process at the end of the programme. Reducing the maximum load by 50 % will achieve a better result. Small loads achieve a better result.

The garments must be suitable for drying in a tumble dryer and suitable for ironing .

The following extra options can be selected in addition to the programmes

	Short	Pre-ironing	Pre-wash
ECO 40-60	–	–	–
Cottons	●	●	●
Minimum iron	●	●	–
Delicates	●	●	–
Woollens	–	–	–
Express 20	✓	●	–
Dark garments/Denim	●	●	–
Shirts	●	✓	–
Proofing	–	–	–
Drain/Spin	–	–	–

● = can be selected

✓ = activated automatically

– = cannot be selected

Washing	
The figure quoted in the bucket is the maximum temperature at which the garment can be washed.	
	Normal agitation
	Reduced agitation
	Much reduced agitation
	Hand wash
	Do not wash

Programme selection examples

Programme	Care symbols
Cottons	
Minimum iron	
Delicates	
Woollens	
Express 20	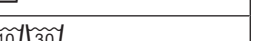

Drying	
	Normal temperature
	Low temperature
	Do not tumble dry

Ironing	
	Approx. 200 °C
	Approx. 150 °C
	Approx. 110 °C Ironing with steam can cause irreversible damage.
	Ironing/rotary ironing prohibited

Professional cleaning	
	Dry clean only. The letters indicate the type of cleaning agent required.
	Wet cleaning
	Dry cleaning prohibited

Bleaching	
	Any oxidation bleach can be used
	Use oxygen bleach only
	Do not bleach

Programme sequence

	Main wash		Rinse		Spin
	Water level	Wash rhythm	Water level	Rinse cycles	
ECO 40-60		Ⓐ		2–3[2]	✓
Cottons		Ⓐ		2-4[1,2]	✓
Minimum iron		Ⓑ		2-3[2]	✓
Delicates		Ⓒ		2-3[2]	✓
Woollens		Ⓔ		2	✓
Express 20		Ⓐ		1	✓
Dark garments/Denim		Ⓑ		3-4[2]	✓
Shirts		Ⓒ		3	✓
Proofing	–	Ⓑ		1	✓
Drain/Spin	–	–	–	–	✓

Please see the next page for a description of the symbols.

= low water level

= medium water level

= high water level

Ⓐ = intensive rhythm

Ⓑ = normal rhythm

Ⓒ = sensitive rhythm

Ⓔ = handwash rhythm

✓ = carried out

– = not carried out

This washing machine has fully electronic controls with automatic load control. The washing machine takes in the right amount of water required for the programme depending on the amount of laundry and its absorbency rate.

The programme sequences outlined in the chart are based on the basic programme with a full load.

Special features in the programme sequence

Anti-crease:
At the end of the programme, the drum continues to turn at intervals for up to 30 minutes to help prevent creasing.
Exception: there is no anti-crease phase in the *Woollens* programme.
The washing machine can be opened at any time.

[1] If a temperature of 60 °C or higher is selected, two rinses are carried out. If a temperature of less than 60 °C is selected, three rinses are carried out.

[2] An additional rinse is carried out if:

- there is too much foam in the drum
- a spin speed lower than 700 rpm has been selected.

[3] An additional rinse is carried out if:

- the *Water +* extra option has been selected and the options *02* or *03* have been activated in Programmable functions.

[5] An additional rinse is carried out if: the *Water +* extra option has been selected.

Changing a programme (safety lock)

A programme, temperature, spin speed or selected options cannot be changed once the machine has been successfully started. This prevents the machine being operated unintentionally, e.g. by children.

If the washing machine is switched off during active programme operation, the standby function does not switch the washing machine off completely after 15 minutes. Safety functions continue to be active because there may still be water inside the drum.

Cancelling a programme

You can cancel a programme at any time after it has started.

- Turn the programme selector to the ⏻ position.
- Turn the programme selector to any position.

Rotating bars ⌐¯¬... ⌐_¬ ... ⌐¯¬ or -0- are shown on the time display.

The water is pumped away and the door lock is then released.

Selecting a new programme

- Turn the programme selector to the required programme.
- Check that there is still detergent in the detergent drawer. Add more detergent if there is none left.
- Touch the *Start*/*Add laundry* sensor control.

The correct detergent

All detergents produced for automatic washing machines are suitable. Follow the manufacturer's instructions and dosage recommendations on the packaging.

For users in Asia:
please use a low foaming detergent suitable for use in front-loading machines

The right amount to dispense will depend on the following:

- the soiling level of the load
- the quantity of the laundry
- the water hardness level.
  Check with your local water supplier if you do not know the hardness level in your area.

Water softeners

A water softener can be used to cut down on the use of detergents in areas with water hardness levels II and III. Dispense according to the amount specified on the packaging. First add detergent and then the water softener.

You can then use the recommended amount of detergent for water hardness level I.

Water hardness levels

Hardness scale	Hardness level in mmol/l	German scale °d
I (soft)	0 – 1.5	0 – 8.4
II (medium)	1.5 – 2.5	8.4 – 14
III (hard)	above 2.5	above 14

Dispensing aids

Use dispensing aids, (e.g. balls) if these are supplied with the detergent, particularly when using liquid detergent.

Refill packs of detergent

When purchasing detergent buy refill packs wherever possible. This helps reduce the amount of waste packaging.

Colour run and dye removers/ dyes

⚠ Damage due to colour run/dye removers.
Colour run and dye removers can cause corrosion in the washing machine.
Do not use colour run or dye removers in this washing machine.

Dyes suitable for use in domestic washing machines can be used. However, please note that the salt used in the dyeing process can cause corrosion to stainless steel components in the machine if you use dye frequently. Always follow the dye manufacturer’s instructions carefully.

Fabric conditioner and liquid starch

Fabric conditioner
makes garments soft to handle and helps prevent static cling when tumble drying.

Starch
stiffens and gives body to items of laundry, e.g. shirts, tablecloths and bed linen.

Detergent

Recommended Miele detergents

Miele detergents have been specially designed for day-to-day use in Miele washing machines. See “Detergents and care products” for more information about these detergents.

	Miele UltraPhase 1 and 2	Miele single-use capsules		
ECO 40-60	✓	–	✓	✓
Cottons	✓	–	✓	✓
Minimum iron	✓	–	✓	✓
Delicates	✓	✓	✓	–
Woollens	–	✓	–	–
Express 20	✓	–	✓	–
Dark garments/Denim	✓	✓	✓	–
Shirts	✓	–	✓	✓
Proofing	–	–	✓	–

✓ Recommendation

– No recommendation

Specialist detergents (e.g. WoolCare)

Fabric care (e.g. fabric conditioner)

Additive (e.g. booster)

Recommended detergents in accordance with Directive (EU) Nr. 1015/2010

The recommendations apply to the temperature ranges given in the Programme chart.

	Universal	Coloureds	Delicates and woollens	Specialist
	detergent			
ECO 40-60	✓	✓	–	–
Cottons	✓	✓	–	–
Minimum iron	–	✓	–	–
Delicates	–	–	✓	–
Woollens	–	–	✓	✓
Express 20	–	✓[1]	–	–
Dark garments/Denim	–	✓[1]	–	✓
Shirts	✓	✓	–	–

✓ Recommendation

– No recommendation

[1] Liquid detergent

[2] Powder detergent

1. The *Twin Dos whites* sensor control will flash at the start of the programme to indicate that the cartridge for compartment 1 is empty.
2. The *TwinDos colours* sensor control will flash at the start of the programme to indicate that the cartridge for compartment 2 is empty.

Preparing the cartridge

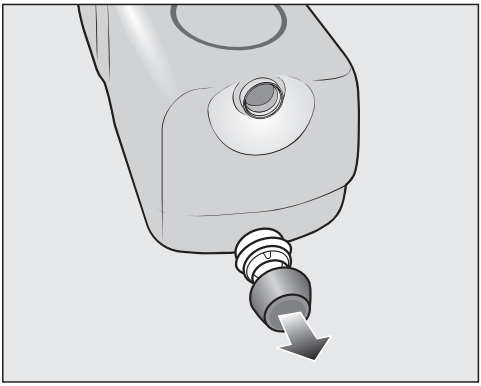

■ Remove the cover cap from the cartridge.

or

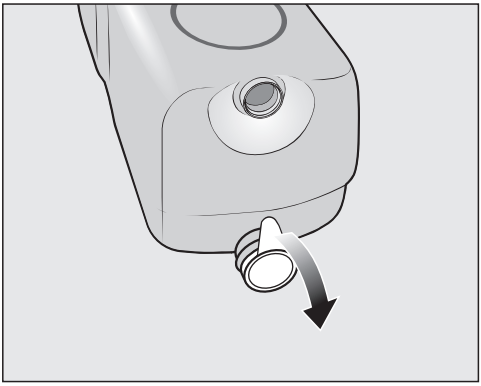

■ Remove the film seal from the cartridge completely.

⚠ Risk of damage from film seal

If the film seal is not removed completely, leaks can occur in the TwinDos system.

Remove the film seal from the suction port on the cartridge completely before inserting the new cartridge.

Replacing the cartridge

■ Switch on the washing machine.

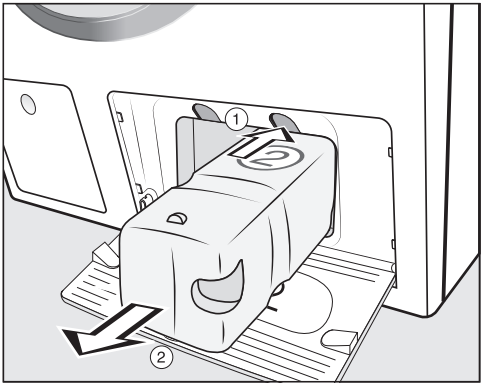

① To release the lock, press the yellow button above the cartridge.

② Pull out the cartridge.

■ Insert a new cartridge.

■ Touch the flashing sensor control.

The counter is set to 0.

Cleaning the external casing and the control panel

⚠ Risk of electric shock!
Mains voltage is present when the washing machine is switched off
Disconnect the machine from the electricity supply before cleaning or maintenance.

⚠ Risk of damage due to ingress of water.
The pressure of a water jet can cause water to get into the washing machine, resulting in damage to components.
Do not spray the washing machine with a water jet.

- Clean the casing and control panel with a mild cleaning agent or soap and water and dry both with a soft cloth.
- The drum can be cleaned using a suitable stainless steel cleaning agent following the manufacturer's instructions on the packaging.

⚠ Damage caused by cleaning agents.
Solvent based cleaning agents, abrasive cleaners, glass cleaners or multi-purpose cleaning agents can cause damage to plastic surfaces and other parts.
Do not use any of these cleaning agents.

Cleaning the detergent dispenser drawer

Washing at low temperatures and the use of liquid detergent can lead to a build-up of mould and germs in the detergent drawer.

- Clean the entire detergent drawer at regular intervals for hygiene reasons, even if you are using the TwinDos system exclusively.

Removing the dispenser drawer

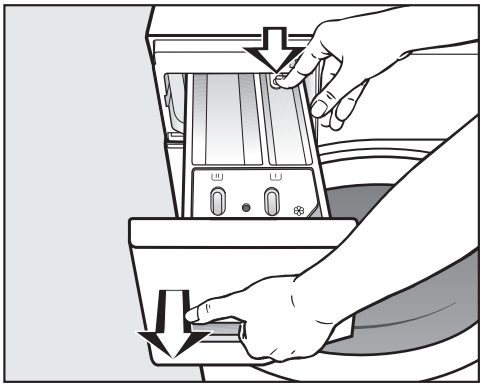

- Pull out the detergent dispenser drawer until a resistance is felt. Press down the release button and at the same time pull the drawer right out of the machine.
- Clean the detergent drawer with warm water.

Cleaning the siphon and the ❀/▭ compartment channel

Liquid starch results in clogging. If clogged, the siphon in the ❀/▭ compartment will not work and the compartment can overflow.

Clean the siphon particularly thoroughly after using liquid starch a few times.

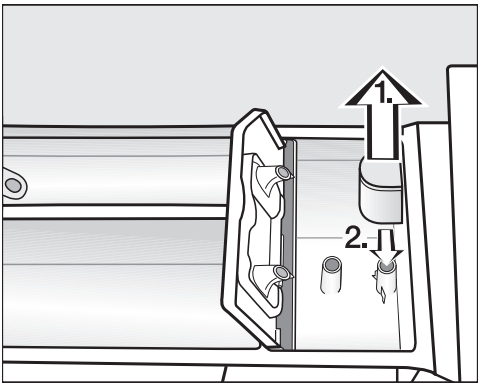

1. Remove the siphon from ❀ compartment and clean under warm running water. Clean the siphon tube in the same way.
2. Replace the siphon.

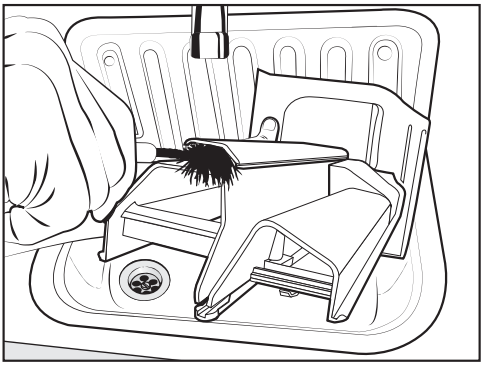

- Clean the fabric conditioner channel using a brush and warm water.

Cleaning the detergent dispenser drawer compartment

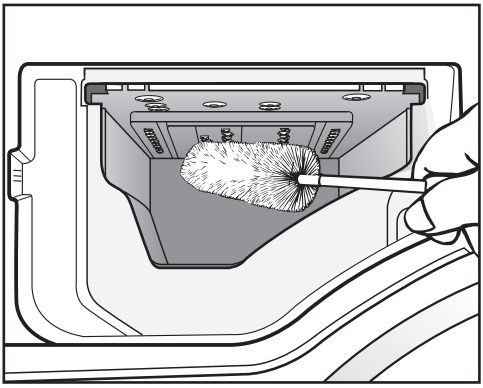

- Use a bottle brush to remove detergent residues and limescale from the jets inside the detergent dispenser drawer compartment.
- Refit the detergent drawer.

Tip: To assist drying, leave the detergent drawer slightly open.

Hygiene info (Cleaning the drum)

Washing at low temperatures and/or using liquid detergent can cause bacteria and unpleasant odours to build up in the washing machine. Use the *Cottons* 90 °C programme to clean the washing machine. Clean the drum no later than the point at which the **i** indicator light and *1* light up on the time display.

Cleaning the water inlet filter

The washing machine has 2 filters to protect the inlet valve. Check these filters every 6 months or so. Perform this check more often if there are frequent interruptions to the external water supply.

Cleaning the filter in the inlet hose

- First turn off the stopcock.
- Unscrew the inlet hose from the stopcock.

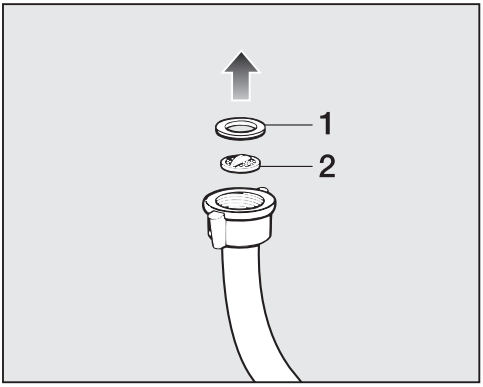

- Remove the rubber seal **1** from the recess.
- Using pointed pliers, take hold of the plastic filter slat **2** and remove the plastic filter.
- Clean the filter.
- Reassemble in reverse order.

Cleaning the filter in the inlet valve

- Using pliers, carefully loosen the ribbed plastic nut on the inlet valve and unscrew it.

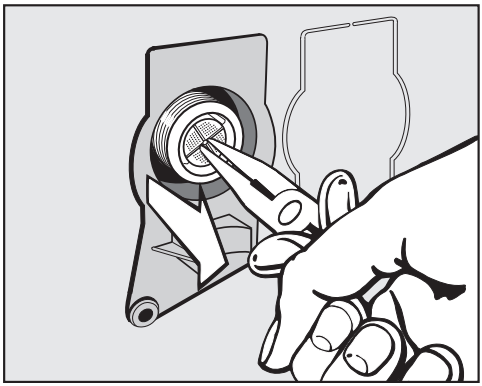

- Use pointed pliers to withdraw the plastic filter by the slat.
- Clean the filter.
- Reassemble in reverse order.

The two filters must be put back in place after cleaning.

- Screw the screw connection securely back onto the stopcock.
- Open the stopcock.

Make sure there is no water leaking from the threaded union.
Tighten the threaded union.

TwinDos maintenance

⚠ Damage resulting from dried laundry detergent.
If the system has not been used for a long time (more than two months), detergent in the hoses can become viscous or dry out. The hoses can become blocked and would then need to be cleaned by a technician.
Clean the TwinDos system.

To clean the system, you need a "TwinDosCare" cleaning cartridge, which is available from www.shop.miele.com.

The washing machine has a cleaning programme for the TwinDos system. Running the cleaning programme will clean the hoses inside the washing machine.

Starting the maintenance programme

The maintenance programme can be started for compartment ① and compartment ② using the *P68* programmable function.

Accessing the programming level

Prerequisites:

- The washing machine is switched on (the programme selector is pointing to a wash programme).
- The washing machine door is open.

❶ Touch the *Start/Add laundry* sensor control and hold it down while carrying out steps ❷ and ❸.

❷ Close the washing machine door.

Wait until the *Start/Add laundry* sensor control lights up constantly ...

❸ ... and then release the *Start/Add laundry* sensor control.

After approximately 4 seconds, *P13* will light up on the time display.

❹ Touch the > or < sensor control until *P68* appears on the time display.

❺ Confirm with the *Start/Add laundry* sensor control.

-00 will light up on the time display.

❻ Touch the > sensor control.

-01 will light up on the time display.

❼ Confirm with the *Start/Add laundry* sensor control.

UPI will flash on the time display.

■ Push the cleaning cartridge into compartment ①.

❽ Confirm with the *Start/Add laundry* sensor control.

Compartment ① is cleaned.

Tip: To clean compartment ②, proceed in the same way as with compartment ②, but press the > sensor control twice in step ❻. *-02* will light up on the time display.

Cleaning the compartment

Detergent residue can cause clogging.

■ Use a damp cloth to clean the compartment interior when you change the cartridges.

Problem solving guide

Many malfunctions and faults that can occur in daily operation can be easily remedied. You can save time and money in many cases, as you do not need to call your Miele dealer.

The following tables are designed to help you to find the cause of a malfunction or a fault and to resolve it.

The programme does not start

Issue	Cause and remedy
The control panel remains dark.	There is no power to the machine. ■ Check whether the mains plug is plugged in and switched on. ■ Check whether the fuse or circuit breaker has tripped.
	The washing machine has switched off automatically to save energy. ■ Switch the washing machine on again by turning the programme selector.
F **and** *34* **alternately appear in the time display.**	The door is not closed properly. The door lock could not engage. ■ Close the door again. ■ Start the programme again. If the fault message appears again, contact your Miele Dealer.
After the appliance is switched on, *UP* **appears in the time display.**	An update is available for the washing machine. See “Programmable functions – *P99* RemoteUpdate” for more information.

The programme is cancelled and a fault indicator light lights up in the control panel

Issue	Cause and remedy
The fault indicator light lights up, F and 11 appear alternately in the time display and the buzzer sounds.	The water outlet is blocked or restricted. The drain hose has been fixed too high. ■ Clean the drain filter and the drain pump. ■ The maximum delivery head is 1 m.
The fault indicator light lights up, F and 10 appear alternately in the time display and the buzzer sounds.	The water inlet is blocked or restricted. ■ Check whether the stopcock is opened properly. ■ Check whether the inlet hose is kinked. ■ Check whether the water pressure is too low.
	The filter in the water inlet is blocked. ■ Clean the filter.
The fault indicator light lights up, F and 138 appear alternately in the time display and the buzzer sounds.	The water protection system has reacted. ■ Close the stopcock. ■ Call your Miele Dealer.
F and XXX appear alternately on the time display and the buzzer sounds.	There is a fault. ■ Disconnect the washing machine from the electricity supply. Switch off at the wall and withdraw the plug from the socket, or disconnect the fuse. ■ Wait **at least 2 minutes** before reconnecting the washing machine to the electricity supply. ■ Switch the washing machine on again. ■ Restart the programme. If the fault message appears again, contact your Miele Dealer.

Problem solving guide

During the programme sequence, a symbol appears in the time display

Message	Cause and remedy
-0- **lights up**	The programme selector was moved to a different position after the programme had started. ■ Turn the programme selector back to the original position.
Ctr **lights up briefly in the time display when a programme is selected.**	The washing machine is indicating that it is networked.
OFF **lights up in the time display when the *MobileStart* programme is selected.**	The remote control function is switched off. ■ Activate the remote control programmable function P97 to operate the washing machine via the app.
Con **lights up in the time display when the *MobileStart* programme is selected.**	The washing machine is networked and can be operated via the app.
noC **lights up in the time display when the *MobileStart* programme is selected.**	Miele@home is not set up. ■ Network the washing machine; see “Before using for the first time – 2. Setting up Miele@home”.
Cno **lights up in the time display when the washing machine is switched on.**	Miele@home is not available. ■ Switch off the washing machine. ■ Switch the washing machine on again. ■ If Cno appears again, contact the Miele Customer Service Department. The washing machine can continue to be used. ■ Touch the illuminated ⏻ sensor control.

At the end of the programme, an indicator light lights up in the control panel

Issue	Cause and remedy
The ◒ indicator light lights up.	Excessive foam has built up during washing. ■ Use less detergent next time and follow the manufacturer's instructions on dosage given on the packaging.
The ℹ indicator light lights up and *1* appears on the time display.	When washing, a wash programme using a temperature above 60 °C has not been run for a long time. ■ Run the *Cottons* 90 °C programme using Miele machine cleaner or a multi-purpose powder detergent. This will clean the washing machine and prevent a build-up of bacteria and odours.
***F* and *37* appear alternately on the time display.**	The *Pre-ironing* extra which runs at the end of the programme could not be carried out properly. ■ Check whether the washing machine is aligned correctly (see "Installation – Levelling the machine"). ■ Check whether the maximum drainage head height of 1 m has been exceeded.
	If the fault message appears again, contact your Miele Dealer. The washing machine can still be used, but without the *Pre-ironing* extra.

Messages or faults with the TwinDos system

Issue	Cause and remedy
The *Twin Dos whites* sensor control flashes.	The UltraPhase 1 cartridge is empty. ■ Replace the UltraPhase 1 cartridge while the washing machine is switched on.
The *TwinDos colours* sensor control flashes.	The UltraPhase 2 cartridge is empty. ■ Replace the UltraPhase 2 cartridge while the washing machine is switched on.
The ℹ indicator light lights up and *2* appears on the time display.	TwinDos has not been used for too long a time. It is possible that detergent has dried inside the hoses. ■ **Immediately** carry out the TwinDos maintenance programme as described in the "Cleaning and care" chapter, "TwinDos maintenance" section.

Problem solving guide

Issue	Cause and remedy
No detergent was dispensed during washing.	TwinDos was not activated. ■ Touch the *Twin Dos whites* or *TwinDos colours* sensor control before running the next programme. TwinDos is activated.
	The detergent was not dispensed even though the *Twin Dos whites* or *TwinDos colours* sensor control was activated. ■ Start another programme with TwinDos dispensing. ■ If detergent is still not dispensed, call the Miele Customer Service Department.
A new detergent cartridge has been inserted, but the cartridge is identified as empty when the machine is switched on.	The washing machine was switched off when the detergent cartridge was replaced. ■ Switch on the washing machine. ■ Remove the detergent cartridge and then reinsert it into the compartment. The counter is set to 0.

General problems with the washing machine

Issue	Cause and remedy
The washing machine smells.	The **i** indicator light lighting up and *1* appearing on the time display was ignored. When washing, a wash programme using a temperature above 60 °C has not been run for a long time. ■ In order to prevent bacteria and unpleasant odours building up in the washing machine, run the *Cottons* 90 °C programme using Miele machine cleaner or a multi-purpose powder detergent.
	The door and the detergent drawer were closed after washing. ■ Leave the door and the detergent drawer slightly open to allow them to dry.
The machine shakes during the spin cycle.	The machine feet are not level. ■ Level the machine and adjust the feet correctly.
The laundry has not been spun properly and is still wet.	The machine detected an imbalance during the final spin cycle and reduced the spin speed automatically. ■ Include both large and small items in the load as this will give better distribution during spinning.

Issue	Cause and remedy
Strange pump noises can be heard.	This is not a fault. These slurping noises occur at the end of the pump sequence as a normal part of operation.
Large amounts of detergent residue remain in the detergent dispensing drawer.	The water pressure is too low. ■ Clean the water inlet filter. ■ Please note that the water pressure must be at least 100 kPa (1 bar).
	Powder detergent used in conjunction with water softeners tends to become sticky. ■ Clean the detergent dispenser drawer and, in the future, add washing powder to the dispensing drawer first, and then add the water softener.
Fabric conditioner is not completely dispensed or too much water remains in the ❀ compartment.	The siphon tube is not correctly positioned or is clogged. ■ Clean the siphon, see “Cleaning and care - Cleaning the detergent dispenser drawer”.
At the end of the programme there is still liquid in the capsule.	The small pipe in the detergent dispenser drawer onto which the capsule is placed is blocked. ■ Clean the small pipe.
	This is not a fault. For technical reasons a small amount of water will remain in the capsule.
There is water next to the capsule in the fabric conditioner compartment	The ⌓ sensor control was not activated. ■ Make sure that you remember to activate the ⌓ sensor control the next time you insert a capsule.
	An empty capsule was not removed at the end of the last wash programme. ■ Remove and dispose of the empty capsule at the end of each programme.
	There is a blockage in the small pipe in the detergent drawer onto which the capsule is placed. ■ Clean the small pipe.

Problem solving guide

An unsatisfactory wash result

Issue	Cause and remedy
Liquid detergent does not give the required result.	Liquid detergents usually contain no bleaching agents. They do not remove fruit, coffee and tea stains. ■ Use the Miele 2 Phase System. The targeted addition of UltraPhase 2 during the wash process removes stains effectively. ■ Use a general purpose powder detergent containing a bleaching agent.
Grey, greasy particles cling to washed laundry.	Insufficient amounts of detergent were used to break down the particles of grease in heavily soiled laundry. ■ Use more detergent. ■ Before washing the next load run a Cottons 60°C programme with powder detergent but without a load.
White residues which look like powder detergent are seen on dark textiles after washing.	The detergent contained compounds (zeolites) to aid water softening which are not soluble in water. These have ended up on the laundry. ■ Try and brush off the residues with a soft brush once the laundry is dry. ■ Wash dark textiles using a detergent which contains no zeolites. Liquid detergents usually contain no zeolites. ■ Use the *Dark garments/Denim* programme for dark coloured laundry.

The door will not open

Issue	Cause and remedy
The door cannot be pulled open during a programme.	The drum is locked during a programme. ■ Follow the description in “5. Starting a programme – Adding or removing laundry”.
After the programme is cancelled, flashing bars ⌊⁻⁾...⌊⁻⁾...⌊⁻⁾... appear in the time display.	For safety reasons the drum door cannot be opened if the suds temperature is higher than 55 °C. ■ Wait until the temperature in the drum has decreased and the bars have stopped flashing in the display.
F **and** *35* **alternately appear in the time display.**	The door lock has jammed. ■ Call your Miele dealer.

Opening the door in the event of a blocked drain outlet and/or power cut

- Switch off the washing machine.

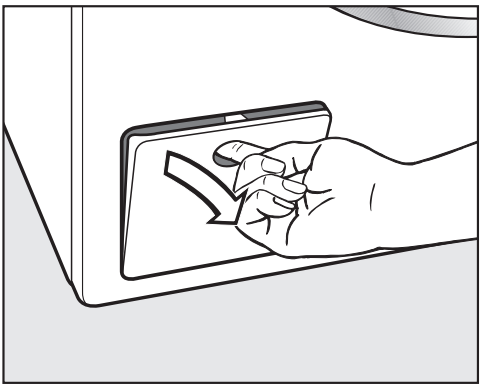

- Open the access panel for the drain pump.

Blocked drain outlet

If the drain outlet is blocked, there may be a large quantity of water left behind in the washing machine.

⚠ Risk of scalding due to hot suds.
Escaping suds will be hot if laundry has been washed at high temperatures!
Carefully allow all suds to drain off.

Draining the washing machine

Remove the drain filter, though not completely.

- Place a suitable container under the access panel, e.g. a universal oven tray.

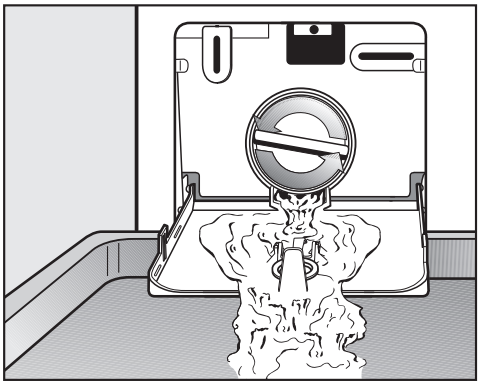

- Slowly unscrew the drain filter to let the water out.
- Tighten the drain filter back up again if you need to interrupt the flow of water.

Once the flow of water ceases:

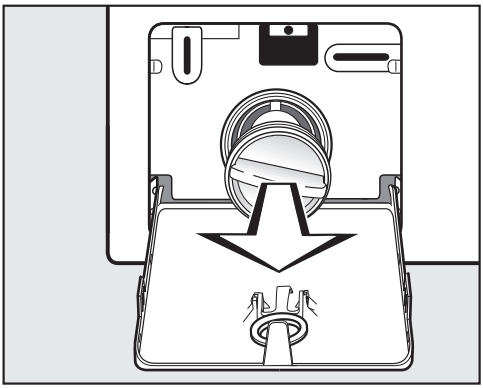

- Remove the drain filter completely.

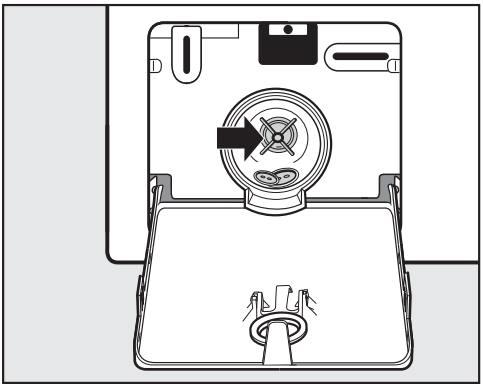

- Clean the drain filter thoroughly.
- Remove any foreign objects (e.g., buttons, coins etc.) and clean the interior. Turn the impellers by hand to check that they rotate freely.
- Replace the drain filter correctly and tighten it securely.
- Close the drain pump access panel.

⚠ Risk of water damage.
Make sure the drain filter is securely tightened. Otherwise there is a risk of water leakage during use.
Replace the drain filter correctly and tighten it securely.

Open the door

⚠ Danger of injury due to rotating drum!
Reaching into a moving drum is extremely dangerous.
Always make sure that the drum is stationary before reaching in to remove laundry.

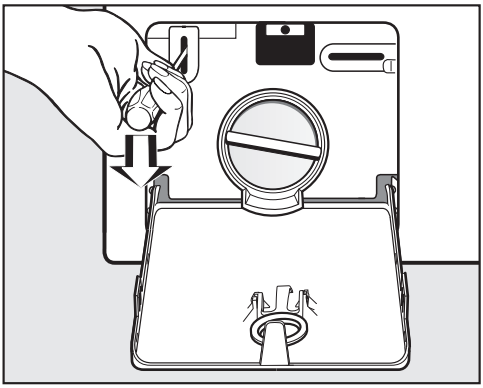

- Use a screwdriver to unlock the door.
- Pull open the door.

Information to help you rectify faults yourself and about Miele spare parts can be found at www.miele.com/service.

Contact in case of malfunction

In the event of any faults which you cannot remedy yourself, please contact your Miele dealer.

Contact details for your Miele dealer are given at the end of this document.

Please note that telephone calls may be monitored and recorded for training purposes and that a call-out charge will be applied to service visits where the problem could have been resolved as described in this booklet.

Please quote the model and serial number of your appliance when contacting your Miele dealer. This information can be found on the data plate.

The data plate is found above the porthole glass when the door is opened.

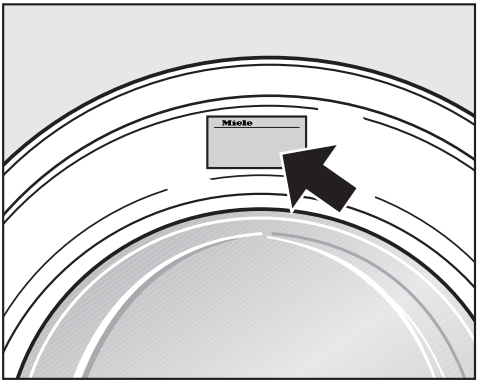

Optional accessories

Optional spare parts and accessories for this washing machine are available from your Miele dealer.

Please note that telephone calls may be monitored and recorded for training purposes.

Guarantee

For information on the appliance guarantee specific to your country please contact your Miele dealer. See end of this booklet for contact details.

Front view

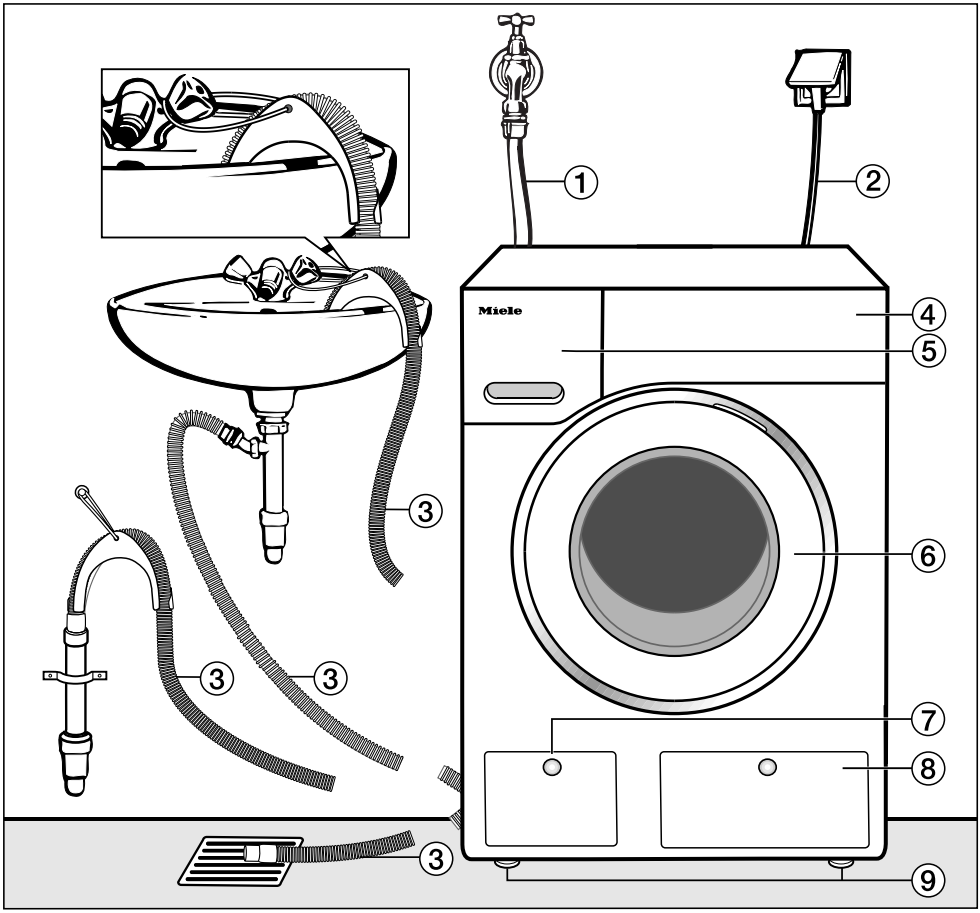

① Water inlet hose (pressure tested to 7000 kPa)

② Mains connection cable

③ Flexible drain hose (with detachable swivel elbow)

④ Control panel

⑤ Detergent dispenser drawer

⑥ Door

⑦ Access to drain filters, drain pumps and emergency release

⑧ Access panel for TwinDos cartridges

⑨ Four height-adjustable feet

Rear view

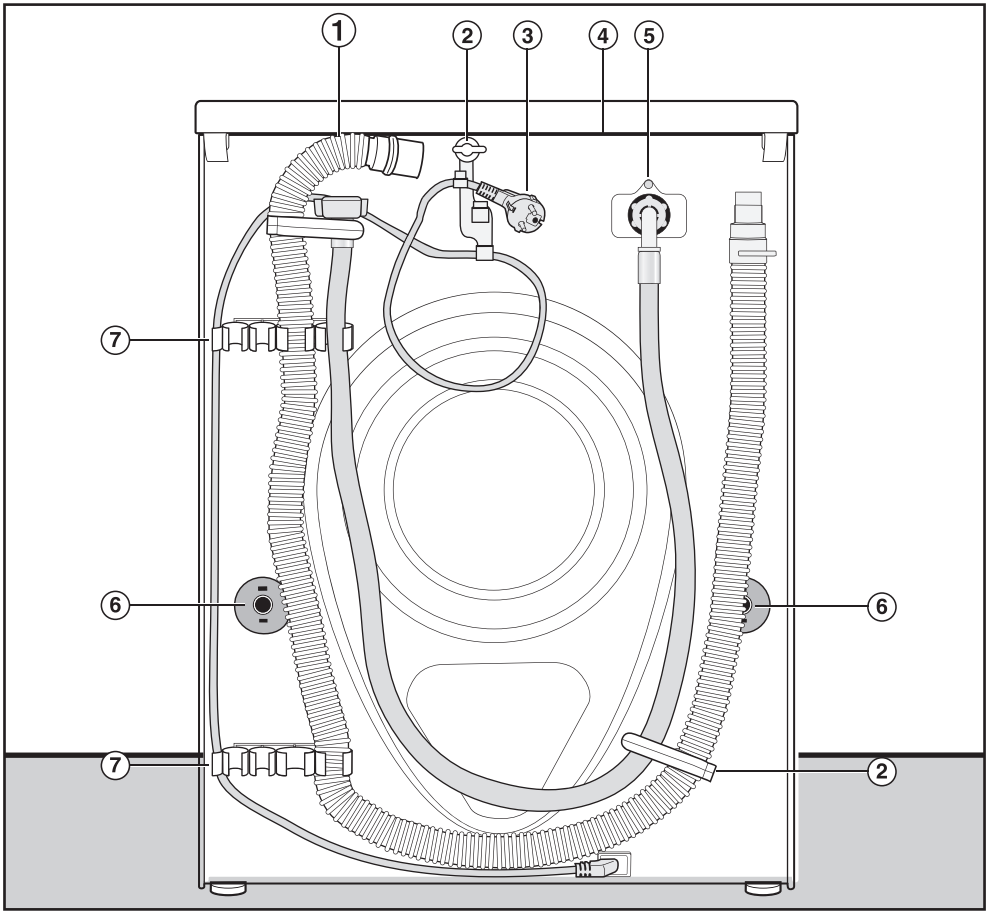

① Drain hose

② Transport clips for inlet and drain hoses and mains connection cable

③ Mains connection cable

④ Protruding lid for holding when moving the machine

⑤ Water inlet hose (pressure tested to 7000 kPa)

⑥ Safety caps for transit bars

⑦ Transport clips for inlet and drain hoses and for storing transit bars when not in use

Installation surface

A concrete floor is the most suitable installation surface. It is far less prone to vibration during the spin cycle than wooden floorboards or a carpeted surface.

Please note:

- The machine must be level and securely positioned.
- To avoid vibrations during spinning, the machine should not be installed on soft floor coverings.

If installing on a wooden joist floor:

- Install the machine on a plywood base (at least 59 x 52 x 3 cm). The base should span several joists and be bolted to the joists and not only to the floorboards. Check for the presence of pipes and cables first.

Tip: If possible, install the machine in a corner. This is usually the most stable part of the floor.

⚠ Injury can occur if the washing machine has not been adequately secured.

During installation, the washing machine must be secured on a plinth to be made available on site (concrete or brick), in order to ensure it cannot fall or slip.

Secure the washing machine using a clamp/fastening bracket (MTS floor mounting kit – available from your Miele dealer or Miele spare parts department).

Transporting the washing machine to its installation site

⚠ Danger of injury due to unsecure lid.

Make sure the fixings at the back of the lid are secure. Otherwise there is a danger of the lid being pulled off when carrying the machine.

Before carrying the machine check that the lid is secure where it protrudes at the back of the machine.

- Carry the washing machine by the front feet and by the lid where it protrudes at the back of the appliance.

Removing the transit bars

Removing the left-hand transit bar

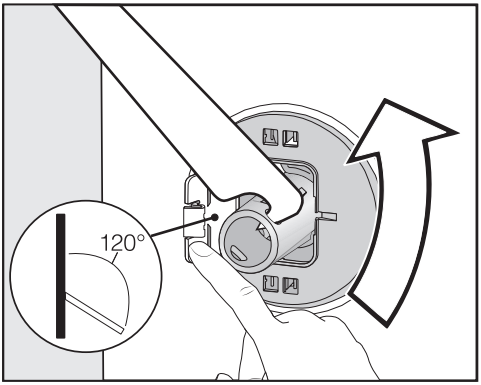

- Push the cover out and turn the left-hand transit bar 90° using the spanner supplied.

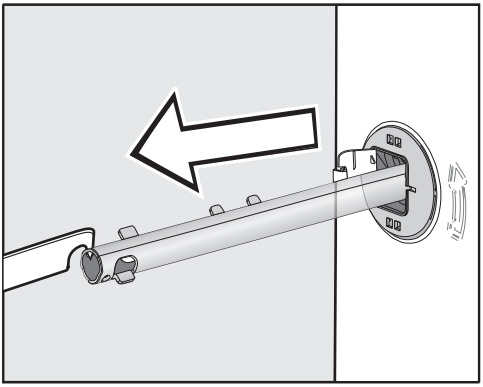

- Withdraw the transit bar.

Removing the right-hand transit bar

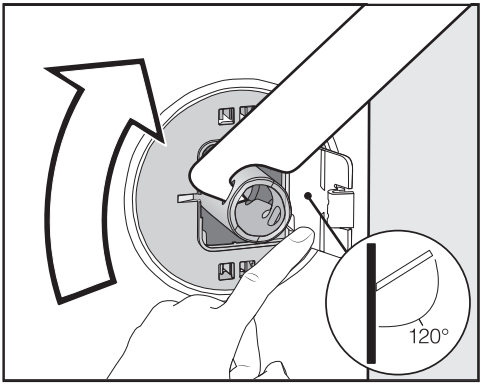

- Push the cover out and turn the left-hand transit bar 90° using the spanner supplied.

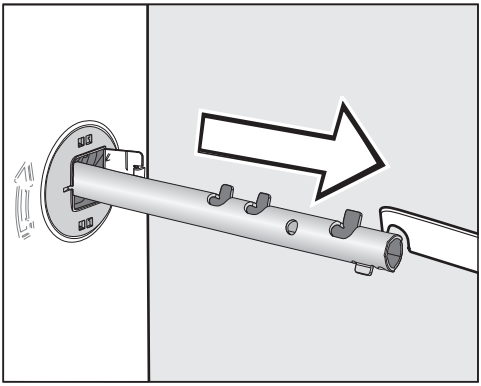

- Withdraw the transit bar.

Covering holes

⚠ Risk of injury from sharp edges.
There is a risk of injury from reaching into holes that are not covered.
Cover the holes for the transit bars after they have been removed.

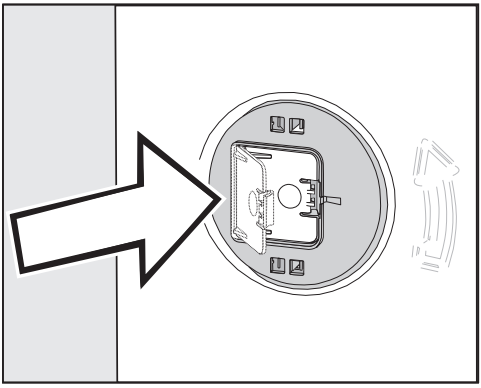

- Push the covers in firmly until they engage in position.

Securing the transit bars

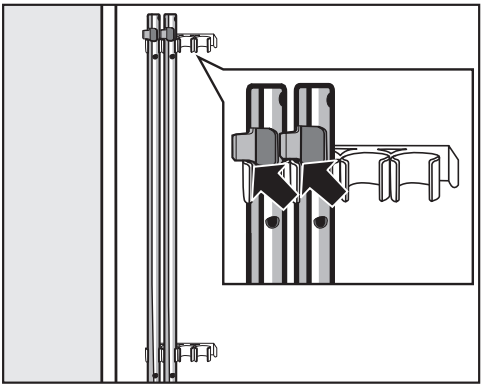

- Secure the transit bars to the back of the washing machine. Make sure that the top catch is located above the holder.

⚠ Risk of damage from incorrect transport.
The washing machine may become damaged if moved without the transit bars in place.
Keep the transit bars in a safe place. Fit them again if the machine is to be moved (e.g. when moving house).

Fitting the transit bars

Opening the covers

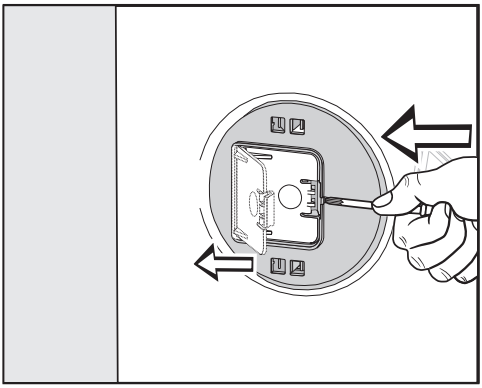

- Press against the retainer with a sharp object (a narrow screwdriver, for example).

The cover opens.

Fitting the transit bars

- To fit the bars, follow the instructions for removing them in reverse order.

Tip: The bars will slide in more easily if you lift the drum slightly.

Levelling the machine

The washing machine must stand perfectly level on all four feet to ensure safe and proper operation.

Incorrect installation may increase electricity and water consumption and may cause the machine to move about.

Screwing out and adjusting the feet

The four adjustable screw feet are used for levelling the washing machine. The machine is supplied with all four feet are screwed in.

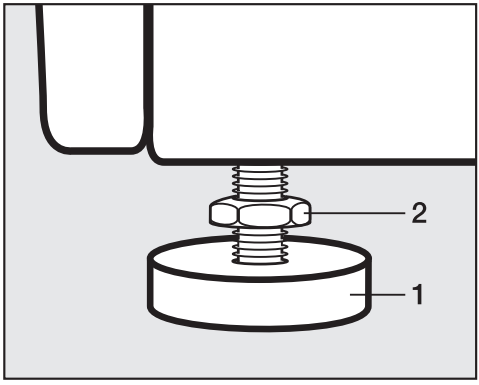

- Using the spanner supplied, turn counter nut **2** in a clockwise direction. Then turn counter nut **2** together with foot **1** to unscrew.

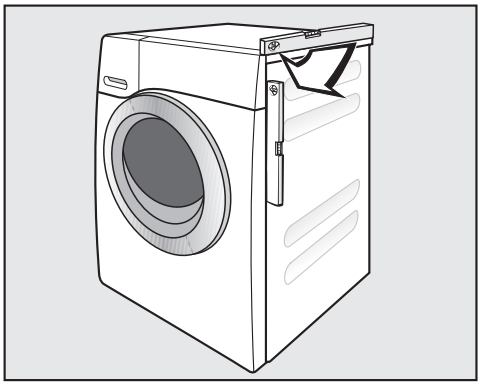

- Use a level to check that the washing machine is standing level.
- Hold foot **1** securely with a pipe wrench. Turn counter nut **2** again using the spanner supplied until it sits firmly up against the housing.

⚠ Risk of damage due to incorrectly aligned washing machine.

There is a danger of the washing machine moving about if the feet are not secured.

Turn all four counter nuts for the feet until they sit firmly up against the housing. Please also check this for the feet which did not need adjustment.

Installing under a continuous worktop

⚠ Risk of electric shock due to exposed cables
There is a risk of coming into contact with live parts while the lid is removed.
Do not remove the washing machine lid.

This washing machine (with lid intact) can be pushed under a countertop if there is space to do so.

Washer-dryer stack

The washing machine can be combined with a Miele tumble dryer in a washer-dryer stack. The appropriate "WTV" stacking kit* to match your dryer is required.

All parts marked* are available from your Miele dealer.

Please note:

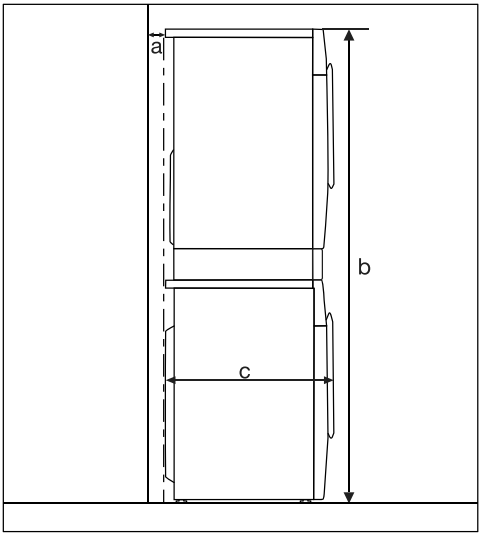

a = at least 2 cm

b = WTV without drawer: 172 cm
WTV with drawer: 181 cm

c = 65 cm

The water protection system

The Miele water protection system protects all parts of the washing machine from water damage.

The system consists of three main components:

- the inlet hose
- the electronic unit and drainage and overflow protection
- the drain hose

Inlet hose

- Protection against bursting

  The inlet hose is tested to withstand pressure of at least 7,000 kPa.

Electronic module and housing

- Floor tray: any leaking water from the washing machine is collected in the floor tray. There is a float switch to close the water intake valve. The water inlet is shut off and any water inside the suds container is drained away.
- Leak protection: any leaking water that is not collected in the floor tray is detected. The water inlet is shut off and any water inside the suds container is drained away.
- Overflow protection: this prevents the washing machine from taking in too much water and overflowing. If the water level exceeds a certain level, the drain pump switches on and pumps the excess water away.

Drain hose

The drain hose is protected by a ventilation system which prevents the washing machine from being emptied completely.

Connection to the water supply

⚠ Health risk and risk of damage due to contaminated incoming water.
The quality of the incoming water must correspond to the drinking water specification of the country in which the washing machine is being operated.
Always connect the washing machine to the mains water supply.

The water connection pressure needs to be between 100 and 1000 kPa. If the water connection pressure exceeds 1000 kPa, a pressure reducing valve must be installed.

A stopcock with a ¾ inch threaded union is required for the connection. If this is not available, only a qualified installer may connect the washing machine to the mains water supply.

The washing machine is not suitable for connection to a hot water supply.
The washing machine must not be connected to a hot water supply.

Connecting the water inlet hose

- Screw the water inlet hose onto the thread of the water inlet with the nut.
- Slowly open the stopcock and check the connection for leaks.
- Correct the position of the seal and screw thread if necessary.

Maintenance

Only use a genuine Miele hose that has been pressure tested to withstand at least 7,000 kPa should you ever need a replacement.

⚠ Damage caused by dirty water.
A filter is located in the open end of the inlet hose and another in the intake point to protect the inlet valve in the washing machine.
These filters must not be removed.

Hose extension

Longer hoses 2.5 or 4.0 m in length are available from your Miele Dealer or Miele as optional extras.

Water drainage

The suds are drained through a drain pump with a 1 m delivery head. For the water to drain freely, the hose must be free of kinks.
If required, the hose can be extended to a length of up to 5 m. Accessories are available from your Miele dealer.

For a delivery head of more than 1 m (up to a max. of 1.8 m) a replacement drain pump will need to be fitted. Please contact your Miele dealer for advice.
For a delivery head of 1.8 m the hose can be extended to a length of up to 2.5 m. Accessories are available from your Miele dealer.

Drainage options:

1. Directed into a sink or basin:

   Please note:

   – Hook the hose over the edge and secure it.

   – If the water is pumped into a washbasin, make sure that it can drain away freely. Otherwise there is a risk of water overflowing or of some of the drained water being sucked back into the machine.
2. Connected securely to a plastic drain pipe with a rubber nipple (there is no need to use a siphon).
3. Connected securely to a floor drain (gully).
4. Connected securely to a washbasin with plastic nipple.

Fitting the elbow

Use the elbow supplied to stop the drain hose from slipping.

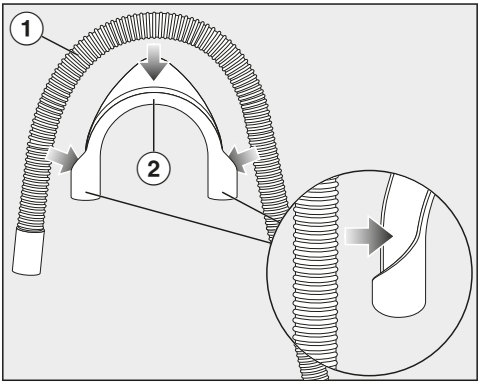

- Attach the elbow ② to the drain hose ①.

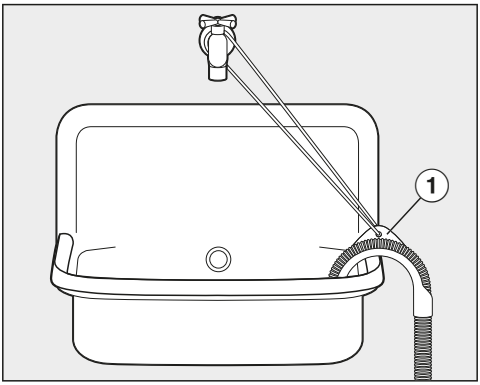

- Place the end of the drain hose in a sink.
- Use a strap and the eye ① to stop the elbow from slipping.

Direct connection to a sink drain outlet

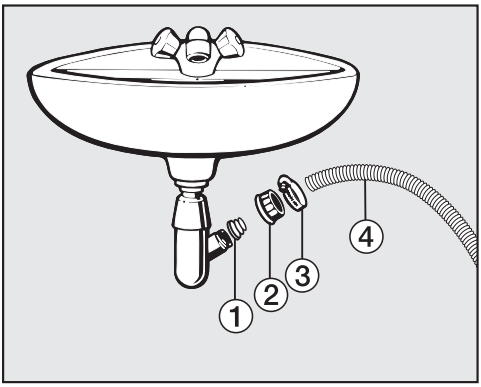

① Adapter
② Spigot nut
③ Hose clip
④ End of the hose

- Fit adapter ① to the sink drain outlet using nut ②.
- Attach the end of hose ④ to adapter ①.
- Use a screwdriver to tighten hose clip ③ up close to the nut.

Electrical connection U.K.

All electrical work should be carried out by a suitably qualified and competent person, in strict accordance with current national and local safety regulations (BS 7671 in the UK).

Ensure power is not supplied to the appliance until after installation work has been carried out.

The appliance is supplied with a mains cable with moulded plug ready for connection to a 230-240V mains supply.

Please ensure the connection data quoted on the data plate match the household mains supply.

Connection should be made via a suitable switched socket which is easily accessible after installation.

For extra safety it is advisable to protect the machine with a suitable residual current device (RCD). Contact a qualified electrician for advice.

Do not connect via an extension lead. Extension leads do not guarantee the required safety of the appliance (e.g. danger of overheating).

Non-rewireable plugs BS 1363

The fuse cover must be refitted when changing the fuse, and if the fuse cover is lost, the plug must not be used until a suitable replacement is obtained. The colour of the correct replacement cover is that of the coloured insert in the base of the plug, or the colour that is embossed in words on the base of the plug (as applicable to the design of plug fitted).

Replacement fuses should be ASTA approved to BS 1362 and have the correct rating. Replacement fuses and fuse covers may be purchased from your local electrical supplier.

WARNING: THIS APPLIANCE MUST BE EARTHED

		Load	Energy	Water	Duration	Residual moisture
	°C	kg	kWh	Litres	h:min	%
ECO 40-60		8.0	0.77	60	3:39	51
Cottons	60 °C	8.0	1.35	49	2:29	53
	60°C*	8.0	0.90	49	2:59	53
	20 °C	8.0	0.35	69	2:39	53
Minimum iron	30 °C	3.5	0.45	52	1:59	30
Express 20[1)]	40 °C	3.5	0.34	30	0:20	–
Woollens	30 °C	2.0	0.23	35	0:39	–

1 *Short* extra activated

Consumption data can vary from the nominal values given depending on water pressure, water hardness, water inlet temperature, room temperature, type and volume of load, fluctuations in the electricity supply and any extras selected.

Note for test institutes

*Nominated energy labelling programm according to SASO 2692/2007, SASO 2693/2007 and SASO 2683/2007

TwinDos dispensing must be deactivated when carrying out comparison tests.

Selecting test programmes

*Nominated energy labelling programm according to SASO 2692/2007, SASO 2693/2007 and SASO 2683/2007 can be selected via the *ECO 40-60* programme.

■ Turn the programme selector to the *ECO 40-60* programme.

In the temperature display, temperatures 60 and 40 light up dimly.

■ Touch the 60 sensor control.

The 60°C Cottons test programme is selected. Temperature 60 lights up brightly and 40 lights up dimly.

Technical data

Height	850 mm
Width	596 mm
Depth	643 mm
Depth with door open	1.077 mm
Height for building under	850 mm
Width for building under	600 mm
Weight	Approx. 90 kg
Capacity	8.0 kg dry laundry
Supply voltage	See data plate
Rated load	See data plate
Fuse rating	See data plate
Consumption data	See “Consumption data”
Minimum water flow pressure	100 kPa (1 bar)
Maximum water flow pressure	1000 kPa (10 bar)
Water inlet hose length	1.60 m
Drain hose length	1.50 m
Length of mains connection cable	2.00 m
Maximum delivery head	1.00 m
Maximum drainage length	5.00 m
LEDs	Class 1
Test certifications awarded	See data plate
Power rating in off mode	0.30 W
Networked standby	0.60 W
Frequency range	2.4000–2.4835 GHz
Maximum transmission power	< 100 mW

The programmable functions are used to alter the washing machine's electronics to suit changing requirements. Programmable functions can be altered at any time.

Opening the programming level

Programming is carried out in 8 steps (❶, ❷, ❸ ... ❽) using the sensor controls.

Prerequisites:

- The washing machine is switched on (the programme selector is pointing to a wash programme).
- The washing machine door is open.

❶ Touch the *Start/Add laundry* sensor control and hold it down while carrying out steps ❷–❸.

❷ Close the washing machine door.

Wait until the *Start/Add laundry* sensor control lights up constantly ...

❸ ... and then release the *Start/Add laundry* sensor control.

After approximately 4 seconds, *P11* will light up on the time display.

Choosing and selecting a programmable function

The number of the programmable function will appear in the time display as *P* and a number: e.g. *P13*.

❹ Touch the > or < sensor control to scroll to the next or previous programmable function:

Programmable functions	
P11	Buzzer duration
P12	Buzzer
P13	Keypad tone
P14	PIN code
P22	Control field switch-off behaviour
P24	Memory
P26	Additional long pre-wash – Cottons
P28	Gentle action
P29	Reduced temperature
P32	Maximum rinse level
P33	Suds cooling
P34	Anti-crease
P49	Low water pressure
P62	Display brightness dimmed
P65	TwinDos
P66	Dosage quantity UltraPhase 1
P67	Dosage quantity UltraPhase 2
P68	TwinDos maintenance
P69	Degree of soiling
P90	Operating hours
P00	Factory default
P97	Remote control
P98	SmartGrid
P99	RemoteUpdate

❺ Confirm the selected programmable function by touching the *Start/Add laundry* sensor control.

Editing and saving a programmable function

You can either switch a programmable function on/off or select different options.

❻ Touch the > or < sensor control to switch the programmable function on/off or to select an option:

Programmable function	Available options					
	-00	-01	-02	-03	-04	-05 – -99
P11		●	●			
P12	●	●	✓			
P13	●	✓	●			
P14	✓	●				
P22	●	✓				
P24	✓	●				
P26	✓	●	●	●		
P28	✓	●				
P29	✓	●				
P32	✓	●				
P33	✓	●				
P34	●	✓				
P49	✓	●				
P62		●	✓	●	●	●
P65	●	✓				
P66	●	●	●	●	●	✓
P67	●	●	●	●	●	✓
P68	✓	●	●			
P69		●	✓	●		
P00	●	●				
P97	●	✓				
P98	✓	●				
P99	●	✓				

❼ Confirm the chosen selection with the *Start/Add laundry* sensor control.

The number of the programmable function, e.g. *P13*, will then light up again.

Exit programming level

❽ Turn the programme selector to ⏻.

The option you have selected is now stored in memory. You can change it again at any time.

P11 Buzzer duration

The buzzer sounds to let you that it is the end of the programme. You can decide how long the buzzer should sound for.

Options

-01 = The buzzer sounds 3 times at the end of the programme.

-02 = The buzzer sounds until the washing machine switches off automatically (max. 1 hour).

P12 Buzzer

The buzzer sounds to let you know the programme has finished.

Selection

-00 = Buzzer is switched off

-01 = Buzzer is set to normal volume

-02 = Buzzer is set to loud volume

P13 Sensor tone

Each touch of a sensor control is confirmed with an audible tone.

Selection

-00 = Sensor tone is switched off

-01 = Sensor tone is set to normal volume

-02 = Sensor tone is set to loud volume

P14 Lock code

The lock code prevents the washing machine being used without your knowledge.

When the code has been activated, you have to enter a code after switching the washing machine on. Otherwise the washing machine cannot be operated.

Options

-00 = Lock code switched off

-01 = Lock code is switched on

Using the washing machine with a lock code

The code is **125** and cannot be altered.

- Switch on the washing machine.

_ _ _ appears in the time display and the > and < sensors light up.

- Touch the > sensor.

_ _ *1* appears in the time display.

- Confirm the number with the *Start/Add laundry* sensor.

The first number was saved and you can now enter the second number using the > and < sensors.

- Also enter the second and third numbers and confirm the numbers with the *Start/Add laundry* sensor.

The lock is released and a wash programme can now be selected and started.

P22 Control panel switch-off status

To save energy the time display and sensors will go out after 10 minutes, and only the *Start/Add laundry* sensor will flash slowly.

Options

-00 = Off
The time display and sensors will remain lit up while the washing machine is switched on

-01 = On
The time display and sensors will switch off after 10 minutes if the programme is started.

However; the time display and sensors will remain lit up for 10 minutes after a delay start time has elapsed, after the end of the programme or at the end of the anti-crease phase.

P24 Memory

The washing machine will save the last settings (temperature, spin speed and some of the extras) selected for a programme after the programme has started.

When this programme is chosen again, these saved settings will appear in the display.

Options

-00 = Memory is switched off

-01 = Memory is switched on

P26 Longer pre-wash Cottons

If you require a longer pre-wash you can extend the pre-wash time.

Options

-00 = No increase in the pre-wash time

-01 = + 6 minutes increase in the pre-wash time

-02 = + 9 minutes increase in the pre-wash time

-03 = + 12 minutes increase in the pre-wash time

P28 Gentle action

Activating gentle action reduces the drum action and is suitable for washing lightly soiled items more gently.

Gentle action can be activated for the *Cottons* and *Minimum iron* programmes.

Options

-00 = Gentle action is switched off

-01 = Gentle action rhythm is switched on

P29 Reduce temperature

The boiling point for water is lower at high altitudes. In order to avoid water boiling, Miele recommend activating the reduce temperature setting at altitudes of more than 2000 m above sea level. The maximum temperature is reduced to 80 °C even when a higher temperature is selected.

Options

-00 = The reduce temperature setting is switched off

-01 = The reduce temperature setting is turned on

P32 Maximum rinse level

The water level in the rinse cycle can be permanently set to the highest value.

This function is useful for allergy sufferers as it achieves an excellent rinse result. Water consumption will increase.

Options

-00 = Maximum rinse level is switched off

-01 = Maximum rinse level is switched on

P33 Suds cooling

When this is activated, additional water flows into the drum at the end of the main wash to cool the suds down. Hot suds can damage plastic drainage pipes.

Suds cooling takes place when a temperature of 70 °C or higher is selected for the Cottons programme.

Suds cooling should be activated:

- to prevent the danger of scalding if the drain hose is hooked over the edge of a sink or basin.
- where drainage pipes do not comply with DIN 1986.

Options

-00 = Suds cooling is switched off

-01 = Suds cooling is switched on

P34 Anti-crease

The anti-crease function helps prevent creasing if laundry is not going to be removed immediately after the end of the programme.

The drum continues to turn at intervals for up to 30 minutes at the end of the programme. The door can be opened at any time.

Options

-00 = The anti-crease function is switched off

-01 = The anti-crease function is switched on

P49 Low water pressure

If the water pressure is below 100 kPa (1 bar), the washing machine cancels the programme and the fault message appears.

If the water pressure cannot be increased, activating this function will prevent the programme from being cancelled.

Options

-00 = Low water pressure is switched off

-01 = Low water pressure is switched on

P62 Backlight brightness dimmed

The brightness of the dimmed sensors in the control panel can be set to one of seven different levels.

The brightness changes as soon as you select a different setting.

Options

-01 = Darkest level

↓

-07 = Lightest level

P65 TwinDos

You can switch TwinDos on or off. The *Twin Dos whites* or *TwinDos colours* sensor controls light up dimly when a wash programme is selected or the sensor controls are switched off.

Options

-00 = TwinDos is switched off

-01 = TwinDos is switched on

P66 UltraPhase 1 dispensing quantity

The dispensing quantity is preset to 58 ml at the factory (water hardness level II).

You can adjust the dispensing quantity using this programmable function.

The set millilitres appear on the time display. You can use the > sensor control to increase the dispensing quantity and the < sensor control to reduce it.

P67 UltraPhase 2 dispensing quantity

The dispensing quantity is preset to 45 ml at the factory (water hardness level II).

You can adjust the dispensing quantity using this programmable function.

The set millilitres appear on the time display. You can use the > sensor control to increase the dispensing quantity and the < sensor control to reduce it.

P68 TwinDos maintenance

The washing machine has a cleaning programme for the TwinDos system. Running the cleaning programme will clean the hoses inside the washing machine. When the **i** indicator light lights up and *2* appears on the time display, the washing machine must be cleaned.

Refer to the “Cleaning and care” chapter, “TwinDos maintenance” section for information on how to perform cleaning.

Options

- *-00* = no cleaning
- *-01* = compartment ① cleaning
- *-02* = compartment ② cleaning

P69 Degree of soiling

The quantity of detergent dispensed via TwinDos and the quantity of water required for rinsing depend on factors including the degree of soiling.

Options

- *-00* = light
- *-01* = normal
- *-02* = heavy

P90 Operating hours

You can read off how many hours the washing machine has been in operation for.

The total washing time is shown on the time display in single digits. The washing machine has been in operation for 1234 hours, for example. The figure show on the time display will start with an *H* followed by a *1*, then a *2* and after this a *3* and a *4*. The letter *H* is displayed again after this.

P00 Factory default

All programmable functions except *P90* operating hours are reset to the factory default settings.

Options

- *-00* = Go back (without reset to factory default settings)
- *-01* = Reset programmable functions to the factory default settings

Networking

The *P97*, *P98* and *P99* programmable functions are only displayed if the requirements for using Miele@home have been met (see the “Before using for the first time” chapter, “Miele@home” section).

P97 Remote control

You can use the Miele app to check the status of your washing machine from anywhere and start it remotely. You can also control it remotely via the MobileStart programme.

You can switch off the *P97* programmable function if you do not want to operate the washing machine with your mobile device.

If the *P97* programmable function is not switched on, the app can still be used to cancel a programme.

Use the ◈ sensor control to set a time period within which you want to start the washing machine and start the delay start function (see the “Delay start/SmartStart” chapter). The washing machine will then start within the time period specified when it receives your signal. If it has not received a start signal by the latest start time set, the washing machine will start automatically.

Options

-00 = remote control function is switched off

-01 = remote control function is switched on

P98 SmartGrid

You can set your washing machine to start automatically based on an external signal within a certain time period.

If you have activated SmartGrid, the ◈ sensor control will have the new “SmartStart” function rather than the “Delay start” function.

Use the ◈ sensor control to set a SmartStart time period. The washing machine will then start within the time period specified by you when it receives an external signal. If an external signal has not been received by the latest start time set, the washing machine will start automatically (see the “Delay start” chapter).

Options

-00 = SmartGrid is switched off

-01 = SmartGrid is switched on

P99 RemoteUpdate

The RemoteUpdate function is used to update the software in your washing machine. If an update is available for your washing machine, it will automatically download it. Updates will not be installed automatically. They must be initiated manually.

If you do not install an update, you can continue to use your washing machine in the usual way. However, Miele recommends installing updates.

Activating/Deactivating

The RemoteUpdate function is activated as standard. Available updates will be downloaded automatically but will only be installed if you initiate installation manually. Deactivate RemoteUpdate if you do not want any updates to be downloaded automatically.

Options

-00 = RemoteUpdate is deactivated

-01 = RemoteUpdate is activated

Running a RemoteUpdate

Information about the content and scope of an update will be provided in the Miele app.

A UP message will appear on the time display if an update is available.

You can install the update immediately or postpone it until later. When the washing machine is switched on again, you will be reminded about the update.

Deactivate RemoteUpdate if you do not want to install any updates.

The update may take several minutes.

Please note the following information about the RemoteUpdate function:

- You will only receive a message when an update is available.
- Once an update has been installed, it cannot be undone.
- Do not switch off the washing machine during an update. Otherwise, the update will be aborted and will not be installed.
- Some software updates can only be carried out by the Miele Customer Service Department.

Starting the update

After the washing machine is switched on, UP appears on the time display.

■ Touch the Start/Add laundry sensor control.

UP starts to flash on the time display. The update starts.

Bars on the time display show the progress of the update:
I = 0 %
IIIIII = 100 %

Postponing the update

After the washing machine is switched on, UP appears on the time display.

■ Touch the ◇ sensor control.

The running time of the selected programme appears on the time display.

The next time you switch on the washing machine, you will be prompted to start the update again.

Switching off WiFi

■ Turn the programme selector to the *MobileStart* programme.

Con appears on the time display.

■ Press ◇ and hold ◇ sensor control until the countdown on the time display has finished.

--- appears on the time display.

- The WiFi is switched off.
- The WiFi connection will be reset to the factory default setting.

  The network configuration should be reset whenever a washing machine is being disposed of or sold, or if a used washing machine is being put into operation. This is the only way to ensure that all personal data has been removed and the previous owner will no longer be able to access the washing machine.

  A new connection has to be set up in order to use the Miele@home setting again.

Copyrights and licences for the communication module

For the purpose of operating and controlling the communication module, Miele uses proprietary or third-party software that is not covered by open source licensing terms. These items of software/software components are protected by copyright. The copyrights held by Miele and third parties must be respected.

Furthermore, this communication module contains software components which are distributed under open source licence conditions. The open source components contained in the appliance along with the corresponding copyright notices, copies of the licensing terms valid at the time, and any further information can be accessed locally via IP using a web browser *(http://<IP address>/Licenses)*. The liability and warranty arrangements for the open source licences displayed in this location only apply in relation to the respective rights holders.

Detergents and care products

Detergent, fabric care, additives and machine care products are available for this washing machine. All the products have been designed for Miele washing machines.

These and many other useful products can be ordered from your Miele dealer (see end of this booklet for contact details).

Detergent

Miele UltraPhase 1 and 2

- 2-component detergent for whites and colours
- For brilliant colours and spotlessly white laundry
- Excellent stain removal even at low temperatures

UltraWhite (powder detergent)

- Best results at 20/30/40/60/95 °C
- Radiant white laundry thanks to powerful formula with active oxygen
- Excellent stain removal even at low temperatures

UltraColor (liquid detergent)

- Best wash results at 20/30/40/60 °C
- With colour-protection formula for brilliant colours
- Excellent stain removal even at low temperatures

Specialist detergents

These specialist detergents are available as convenient single-use capsules.

Caps Sport

- For synthetic fabrics
- Neutralises odours thanks to built-in odour absorber
- Prevents static charge in clothes
- Retains the shape and breathability of synthetic fabrics

Caps DownCare

- For down-filled items
- Retains the elasticity and breathability of down
- Lanolin for effective cleaning and gentle care
- Down does not stick together and retains its loft

Caps WoolCare

- Woollens and delicates detergent
- Special wheat-protein-based agents
- Fibre-protection technology to help prevent items shrinking and felting
- Colour-protection formula for gentle cleaning

Fabric care

These fabric care products are available as convenient single-use capsules.

Fabric conditioner cap

- Fabric conditioner for freshly scented laundry
- Pure and thorough cleanliness with a fresh scent
- For soft, bouncy laundry
- Prevents static charge in clothes

Additives

Additives are available as convenient single-use capsules.

Cap Booster

- Highly effective stain remover
- Enzyme technology to help remove stubborn stains
- Suitable for whites and colours
- For best wash results even at low temperatures

Machine care

TwinDosCare

- Cleaning agent for the TwinDos dispensing system
- Use before a prolonged downtime (at least 2 months)
- Use before changing to a different product

Descaling agent

- Removes heavy limescale deposits
- Mild and gentle with natural citric acid
- Gentle on heater elements, drum and other components

IntenseClean

- For hygienic cleanliness in washing machines
- Removes grease, bacteria and associated unpleasant odours
- Effective thorough cleaning

Water softener tablets

- Reduces the amount of detergent needed for hard water
- Less detergent residue in fabrics
- Less chemicals in waste water due to reduced amount of detergent

Miele in Saudi Arabia:
Awad Badi Nahas Trading Co. Ltd.
Medina Road, P.O. Box 11529
Jeddah 21463
Kingdom of Saudi Arabia
Tel. +966 12 2560888
Hotline for customer care 920003240
(Sat – Thu; 8 am – 5 pm)
Fax +966 12 2560555
E-mail: info@awadnahas.com
Website: www.awadnahas.com

Miele in United Arab Emirates:
Miele Appliances Ltd.
Showroom 1 Eiffel 1 Building
Sheikh Zayed Road, Umm Al Sheif
P.O. Box 114782 - Dubai
United Arab Emirates
Tel. +971 4 3044 999
Fax +971 4 3418 852
800-MIELE (64353)
E-mail: info@miele.ae
Website: www.miele.ae
Webshop: shop.miele.ae

Manufacturer: Miele & Cie. KG, Carl-Miele-Straße 29, 33332 Gütersloh, Germany

Miele

WWD 660

en-AE

M.-Nr. 12 631 360 / 00