Miele

Operating and installation instructions
Vented dryer

Always read the operating instructions before setting up, installing and commissioning the appliance. This prevents both personal injury and damage to the machine.

en-GB

M.-Nr. 12 032 470

Contents

Caring for the environment 6

Warning and Safety instructions 7

Operating the tumble dryer 18
Control panel 18
Symbols on the control panel 19
Symbols on the display 20
Sensor controls and touch display with sensor controls 21
Main menu 21
Examples of how to operate the appliance 22
Selection list 22
Easy selection 22
Setting numerical values 22
Exiting a sub-menu 22

Initial commissioning 23
Switch on the tumble dryer 23
Setting the language 23
Reference to external appliances 24
Setting the display brightness 24
Confirming the time request 24
Setting the time 24
Selecting programme packages 25
Setting up a payment system 25
Completing the commissioning process 26

1. Notes on correct laundry care 27
Washing 27
Drying 27
Care label symbols 27

2. Load the tumble dryer 28

3. Selecting a programme 29
Switch on the tumble dryer 29
Selecting a programme 29
Selecting standard programmes with the programme selector dial 29
Selecting special programmes via the ☆ programme selector position 29

4. Selecting programme settings 30
Main menu for a programme 30
Select the drying level 30
Selecting the duration (timed programmes) 30

Selecting extra options 31
Low temperature 31
Anti-crease 31
Selecting delay start 32

5. Starting the programme 33
Starting the programme 33

6. End of programme – unloading the drum 34
End of programme 34
Unloading the drum 34
Observe any maintenance notes 34

Programme overview 35
Standard programmes 35
☆ Special programmes 37
Programme packages 40

Changing the programme sequence 43
Changing a programme once it has started 43
Cancelling a programme 43
Reselecting a cancelled programme 43
Adding laundry 43

Cleaning and care 44
When to clean 44
Cleaning the fluff filters 44
Removing the fluff filter 44
Dismantling the fluff filter 45
Cleaning the fluff filter components when dry 45
Cleaning the fluff filter components when wet 45
Cleaning the air supply area 46
Assembling and fitting the fluff filter 47
Cleaning the tumble dryer 48

Problem solving guide 49
The display indicates the following messages or faults 49
Unsatisfactory drying results 52
The drying cycle duration is very long 53
General problems with the tumble dryer 54

Service 55
Contact in the event of a fault 55
Optional accessories 55

Contents

Installation 56
Front view 56
Rear view 57
Locations 58
Side view 58
Steel plinth 58
View from above 58
Washer-dryer stack 58
Transporting the tumble dryer to its installation site 59
Installation 60
Levelling the tumble dryer 60
External control equipment 60
Electrical connection 61

Installation of the ducting 63
General principles concerning exhaust air management 63
General principles concerning the air supply 63
Calculating the total ducting length 64
Exhaust air outlets on the back of the tumble dryer 65
Sealing the air outlets 65
Dimensions of the exhaust air outlets 65
Installing plug-in pipes 66
Example 66
Installing flexible hoses 67
Flat ducting 67
Examples 68

Consumption data 69

Technical data 71
Data sheet for household tumble driers 72
Data sheet for household tumble driers 74
EU Conformity declaration 76
UK Conformity declaration 76

Supervisor level 77
Opening Supervisor level 77
Access via code 77
Change code 77
Demo programme 77
Opening the supervisor level 78
Exiting the supervisor level 78
Language 79
Brightness 79

Clock display 79
Finish tone volume 79
Keypad tone volume 79
Welcome tone volume 79
Fault alarm 80
Memory 80
Anti-crease 80
Further cooling 80
Cooling down temperature 80
“Display” switch-off status 81
Delay start 81
Programme name 81
Visibility parameters 82
Drying levels Cottons 82
Drying level Minimum iron 82
Drying level Automatic plus 82
Drying level Machine iron 82
Clean the airways 82
Clean the filters 83
Programme packages 83
COM mod. selection 84
Availability of Miele digital products 84
WiFi / LAN 85
Network time 86
External exhaust flap 86
Additional fan 87
Pressure sensor 87
Remote 87
Remote update 88
SmartGrid 88
Legal information 89
Payment system 90
- Setting for payment systems 90
- External prog. lock 90
- Feedback signal to pay system 90
- Payment system lock 91
- Delete paid signal 91
- Debounce time 91
- Payment system overriding time 91
- Duration Cool air 92
- Duration Warm air 92
- FOC programmes 92

Caring for the environment

Disposal of the packing material

The packaging is designed to protect the appliance from damage during transportation. The packaging materials used are selected from materials which are environmentally friendly for disposal and should be recycled.

Recycling the packaging reduces the use of raw materials in the manufacturing process and also reduces the amount of waste in landfill sites.

Disposing of your old appliance

Electrical and electronic appliances often contain valuable materials. They also contain specific materials, compounds and components, which were essential for their correct function and safety. These could be hazardous to human health and to the environment if disposed of with your domestic waste or if handled incorrectly. Please do not, therefore, dispose of your old appliance with your household waste.

Please dispose of it at your local community waste collection / recycling centre for electrical and electronic appliances, or contact your dealer or Miele for advice. You are also responsible for deleting any personal data that may be stored on the appliance being disposed of. Please ensure that your old appliance poses no risk to children while being stored prior to disposal.

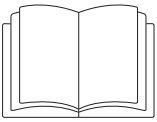

▶ It is essential to read these instructions.

This tumble dryer complies with all current local and national safety requirements. However, inappropriate use can lead to personal injury and damage to property.

Read the operating instructions carefully before using the tumble dryer. They contain important information on safety, installation, use and maintenance. This prevents both personal injury and damage to the tumble dryer.

In accordance with standard IEC 60335-1, Miele expressly and strongly advises that you read and follow the instructions in the chapter on installing the tumble dryer as well as the safety instructions and warnings.

Miele cannot be held liable for damage caused by non-compliance with these instructions.

Keep these operating instructions in a safe place and pass them on to any future owner.

When instructing other people how to use the tumble dryer, they must be made aware of these safety and warning instructions.

Correct application

▶ This tumble dryer is only intended for drying fabrics which have been washed in a water solution, and marked on the manufacturer's care label as being suitable for tumble drying. “Dry cleaning kits” for freshening up garments in a tumble dryer are increasingly available on the market. If using, do so at your own risk, and follow the instructions provided on the packaging. Any other applications may be dangerous. Miele cannot be held liable for damage resulting from incorrect or improper use or operation.

▶ This tumble dryer may also be operated in public areas.

▶ The tumble dryer is not intended for outdoor use.

▶ This appliance can only be used by people with reduced physical, sensory or mental capabilities, or lack of experience or knowledge, if they are supervised whilst using it or have been shown how to use it in a safe way and understand and recognise the consequences of incorrect operation.

▶ Children under 8 years of age must be kept away from the tumble dryer unless they are constantly supervised.

▶ Children 8 years and older may only use the tumble dryer unsupervised if they have been shown how to use it safely and recognise and understand the consequences of incorrect operation.

▶ Children must not be allowed to clean or maintain the tumble dryer unsupervised.

▶ Please supervise children in the vicinity of the tumble dryer and do not let them play with it.

Technical safety

▶ Before setting up the tumble dryer, check it for any externally visible damage.
Do not install or use a damaged tumble dryer.

▶ Do not make any alterations to the tumble dryer, unless authorised to do so by Miele.

▶ Temporary or permanent operation on an autonomous power supply system or a power supply system that is not synchronised with the mains power supply (e.g. island networks, back-up systems) is possible. A prerequisite for operation is that the power supply system complies with the specifications of EN 50160 or an equivalent standard.
The function and operation of the protective measures provided in the domestic electrical installation and in this Miele product must also be maintained in isolated operation or in operation that is not synchronised with the mains power supply, or these measures must be replaced by equivalent measures in the installation. As described, for example, in the current version of BS OHSAS 18001–2 ISO 45001.

▶ Do not connect the tumble dryer to the mains electricity supply by an extension lead. Extension leads are a fire hazard and do not guarantee the required safety of the tumble dryer.

▶ The electrical safety of this tumble dryer can only be guaranteed when correctly earthed. It is essential that this standard safety requirement is met. If in any doubt, please have the on-site wiring system inspected by a qualified electrician. Miele cannot be held liable for the consequences of an inadequate earthing system (e.g. electric shock).

▶ Unauthorised repairs could result in unforeseen dangers for the user, for which Miele cannot accept liability. Repairs should only be undertaken by a Miele approved service technician, otherwise any subsequent damage will not be covered by the warranty. Ensure current is not supplied to the tumble dryer until after maintenance or repair work has been carried out.

▶ If the electrical connection cable is faulty it must always be replaced by a Miele authorised service technician to protect the user from danger.

▶ Faulty components must only be replaced by genuine Miele original spare parts. The manufacturer can only guarantee the safety of the appliance when Miele replacement parts are used.

▶ To ensure the correct performance of the tumble dryer and to prevent the risk of faults and fire, it is important to carry out maintenance on a regular basis.

▶ In the event of a fault or for cleaning purposes, the tumble dryer is only completely isolated from the electricity supply when:

- it is switched off at the wall socket or the plug is withdrawn, or
- it is switched off at the mains, or the mains fuse is disconnected
- the screw-out fuse is removed (in countries where this is applicable), or it is switched off at the isolator switch.

See “Installation - Electrical connection”.

▶ This appliance must not be used in a non-stationary location (e.g. on a ship).

▶ Please observe the instructions in “Installation”, “Installation of the ducting” and “Technical data”.

▶ The accessibility of the plug must be always ensured, in order to separate the tumble dryer from the mains. All electrical work should be carried out only by a suitably qualified and competent person, in strict accordance with national and local safety regulations.

▶ If the appliance is hard wired, adequate provision must be made on site to switch off all poles to disconnect the tumble dryer from the electrical supply.

▶ Do not block the gap between the bottom of the tumble dryer and the floor with plinth facings, deep pile carpet etc. This would hinder a sufficient flow of air to the dryer.

▶ Do not install a lockable door, a sliding door or a door which is hinged in the opposite direction to the dryer door.

▶ This tumble dryer is supplied with a special lamp to cope with particular conditions (e.g. relating to temperature, moisture, chemical resistance, abrasion resistance and vibration). This special lamp must only be used for the purpose for which it is intended. It is not suitable for room lighting. Replacement lamps may only be fitted by a Miele authorised person or by Miele Service.

Correct use

▶ The maximum load for this tumble dryer is 7 kg (dry weight).The maximum recommended loads for individual programmes are given in the Programme chart.

▶ Do not lean on the door. Otherwise, the tumble dryer may tip over, causing injury to yourself or others.

▶ Always close the door after use. This way you will avoid the danger of:

- children climbing onto or into the dryer or hiding things in it.
- pets or other small animals climbing into it.

▶ Do not use a pressure washer or hose to clean the tumble dryer.

▶ Keep the room where the tumble dryer is located free from dust and fluff. If the air that is taken into the machine contains dirt particles, this can cause blockages. A fault may then occur and there is a risk of fire.

▶ The tumble dryer may only be operated when the ducting has been installed and the room is sufficiently ventilated.

▶ Please observe the instructions in “Installation of the ducting”.

▶ The ducting must never be installed in any of the following flues or shafts.

- Chimneys or smokestacks that are in use.
- Shafts that are used to ventilate installation rooms with fireplaces.
- Flues that are used by third parties.

Smoke or exhaust gas that is fed back into the flue or shaft may be toxic.

▶ Reverse suction of exhaust gases may result in a risk of suffocation and poisoning if gas-powered flow heaters, gas-powered room heaters, coal ovens connected to the flue, etc., are installed in the same room, in the same dwelling or in neighbouring rooms and the pressure is 4 Pa or less.

The following measures for suitable room ventilation (examples) can help to prevent negative pressure in the installation area:

- Installing vents that cannot be closed in the exterior walls.
- Window switch: The tumble dryer can only be switched on when a window is open.

Please always seek approval from the appropriate authority (GasSafe engineer, chimney sweep etc.) to confirm that the appliance can be operated without risk and that negative pressure of over 4 Pa can be prevented.

▶ Regularly check all components in the ducting (e.g. wall pipe, external grille, bends, elbows, etc.) to make sure air can move through them and to ensure that they are working properly. Clean components when necessary. Fluff deposits in the ducting system will prevent the air from being extracted properly and, as a result, will stop the tumble dryer from working properly.
If existing ducting is due to be used, it must be checked before being connected to the tumble dryer.

▶ The fluff filter must be cleaned on a regular basis.

▶ Never operate the tumble dryer without the fluff filter or with a damaged fluff filter. This could lead to malfunctions. Fluff can clog the air channels, heating elements and ducting, which could result in a fire.
Stop the tumble dryer immediately and replace the damaged fluff filter.

▶ Do not install the tumble dryer in a room where there is a risk of frost. At temperatures around freezing point, the tumble dryer may not be able to operate properly.
The permitted room temperature is between 2 °C and 35 °C.

▶ To prevent the risk of fire, the following textiles must not be dried in this tumble dryer:

- items which have not been washed.
- Items, such as workwear, which have not been thoroughly cleaned and which are still soiled with grease, oil or other deposits (such as cosmetics, lotions etc). If items have not been thoroughly cleaned there is a danger that these might ignite when heated, even after they have been removed from the dryer at the end of the programme.
- Items that have been soiled with substances such as acetone, petrol, kerosene, stain removers, turpentine, waxes, wax removers and other chemicals (e.g. mops and floor cloths) should be washed in hot water with extra detergent before being dried in the tumble dryer.
- Items which have been splashed with hair lacquer, hair spray, nail varnish remover or similar substances.

When washing very heavily soiled items ensure that you use sufficient detergent and select a high temperature. If in doubt wash several times before drying.

▶ Remove all items from pockets (e.g. lighters, matches).

▶ In many programmes, the heating phase is followed by a cooling down phase to ensure that the items are not too hot to handle when you remove them (this also avoids the danger of the laundry self-igniting). The programme is not finished until the cooling down phase is complete. Ensure that you always wait until the end of the programme before removing the laundry.

▶ Fire hazard.
This tumble dryer must not be connected to a controllable socket (e.g. a timer or a peak-load switch-off device).
The tumble dryer may only be operated with a peak-load device if this is connected to the tumble dryer via the Miele XCI box and the relevant settings have been configured on the tumble dryer.
There is a risk of the laundry igniting itself if the drying programme is cancelled before the cooling phase has finished.

▶ To prevent the risk of fire, the following textiles must not be dried in this tumble dryer:

- items which have been cleaned using chemicals (e.g. professional dry-cleaning agents).
- fabrics which contain a large proportion of rubber, foam rubber or rubber-like materials. For example, products made from latex foam rubber, shower caps, waterproof textiles, rubberised articles and items of clothing and pillows with foam rubber filling.
- Fabrics which contain damaged padding or fillings (e.g. pillows, jackets). When damaged, the filling can get out with the risk of it igniting in the dryer.

▶ The programme ends when the cooling phase starts. Many programmes are followed by the cooling phase to ensure that the items are not too hot to handle when you remove them (this also reduces the risk of the laundry self-igniting).
Always remove all laundry as soon as the programme has finished.

▶ Fabric conditioner and similar products must be used according to the instructions on the manufacturer's packaging.

▶ Benzine, petrol, paraffin, or any easily flammable liquid must not be stored or used near the machine. Danger of explosion.

▶ Do not expose the dryer to air which is contaminated with vapour of chlorine, fluorine or other solvents. Danger of fire.

▶ For tumble dryers with stainless steel surfaces:
The stainless steel surfaces must not come into contact with liquid cleaning and disinfecting agents which contain chlorine or sodium hypochlorite. These agents can have a corrosive effect on stainless steel.
Aggressive vapours containing chlorine can also be corrosive.
Do not store containers of these agents near the tumble dryer.

Accessories

▶ Only use genuine Miele original spare parts and accessories with this appliance. If spare parts or accessories from other manufacturers are used, this will invalidate the guarantee, and Miele cannot accept liability.

▶ The tumble dryer can also be combined with a Miele washing machine in a washer-dryer stack. The appropriate “WTV” stacking kit (available to order) to match your dryer is required.

▶ Make sure that you order the correct plinth for this tumble dryer (available from Miele as an optional accessory).

⚠ Miele cannot be held liable for damage caused by non-compliance with these Warning and Safety instructions.

Control panel

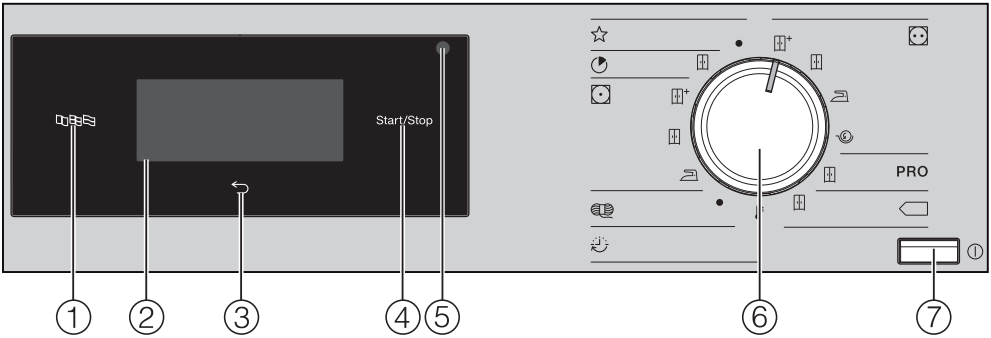

① **Language sensor control**
For selecting the current user language on the display.
The operating language is displayed again after switching the appliance on and off.

② **Touch display with sensor controls**
Displays the selected programme.
The programme settings are selected using the sensor controls in the touch display.

③ **Back sensor control**
Takes you back one level in a menu.

④ **Start/Stop sensor control**
Starts the selected programme and cancels a programme once it has started.

⑤ **Optical interface**
This is used by the Service department as a transmission point.

⑥ **Programme selector**
For selecting the drying programme.
The programme selector can be turned clockwise or anti-clockwise.

⑦ **Button**
For switching the tumble dryer on and off.
The tumble dryer switches off automatically to save energy. This occurs 15 minutes after the end of the programme/anti-crease phase, or 15 minutes after being switched on if no further selection is made.

Symbols on the control panel

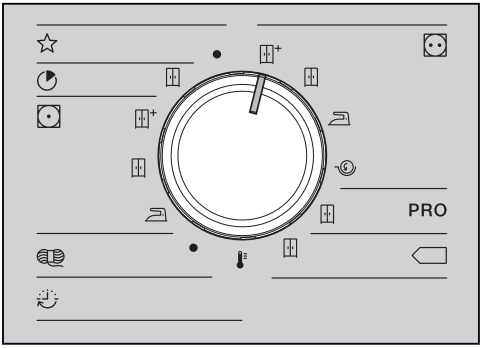

☆	**Special programmes**
◔	**Express**
	Normal
	Minimum iron
+	Normal plus
	Normal
	Hand iron
	Woollens
	Timed drying programme
	Warm air
	Cottons
+	Normal plus
	Normal
	Hand iron
	Machine iron
PRO	**Cottons PRO**
	Normal
	Cottons Eco
	Normal

Symbols on the display

Extras: use the *Extras* sensor control to add extras to a drying programme.

Low temperature: the *Low temperature* sensor control allows you to reduce the mechanical stress placed on the items while drying.

Anti-crease: the *Anti-crease* sensor control allows you to reduce creasing if the laundry is not removed immediately after the end of a programme.

Delay start: use the *Delay start* sensor control to set the starting time of a wash programme ...

... or the finish time

... or the time until the programme starts.

Timed drying programme: this sensor control enables you to select the duration of a timed drying programme.

Supervisor level: use the *Supervisor level* sensor control to alter the tumble dryer's settings.

Information: this allows you to view the selected options while the drying programme is running.

Sensor controls and touch display with sensor controls

The ⊞⊟⊞, ⮌, and *Start*/*Stop* sensor controls and the sensor controls in the display react to finger tip contact. Every touch of a sensor control is confirmed with an audible tone. You can switch off this tone (see “Supervisor level”).

> The control panel with sensor controls and the touch display can be scratched by pointed or sharp objects, e.g. pens.
> Only touch the display with your fingers.

Main menu

The main menu for a drying programme displays different values depending on the programme:

- The programme name of the selected programme with the selected drying level.
- The programme duration.
  - In drying level programmes (e.g. Cottons), the programme duration depends on the drying level selected and the size of the load.
  - For timed drying programmes, the programme duration can be selected freely by touching the sensor control ⏲.
- The selected extras.
- Further selectable options and settings in Supervisor level.

Examples of how to operate the appliance

Selection list

The ∧ and ∨ arrows on the right of the display indicate that choices are available.

The list scrolls down when the ∨ sensor control is touched. The list scrolls up when the ∧ sensor control is touched.

The scroll bar indicates that further options follow.

The currently selected language is marked with a frame.

Touch a language to select it.

Easy selection

If there are no arrows, the selection is limited to the displayed values.

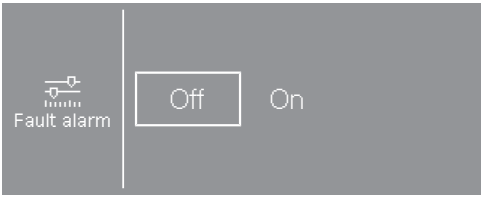

The currently selected value is marked with a frame.

Touch the required value to select it.

Alternatively, change the value using + and –.

After making your change, touch OK.

Setting numerical values

To change a numerical value, use the ∧ and ∨ arrows above or below the numbers you want to change.

Touch the ∧ and ∨ arrows and confirm with the OK sensor control.

Exiting a sub-menu

Select the back ⮌ sensor control to exit a sub-menu.

If you select a value in a sub-menu, but do not confirm with OK, you can discard this value by selecting the ⮌ sensor control.

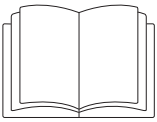

⚠ Risk of injury or damage to property due to improper installation.
Incorrect installation of the tumble dryer can lead to personal injury or damage to property.
Before commissioning the tumble dryer for the first time, make sure it has been installed and connected correctly. Please observe the instructions in “Installation”, and “Installation of the ducting”.

Follow all the steps required for initial commissioning.
During the commissioning process, you will need to define the settings for daily use of the tumble dryer. Some of the settings can only be configured during the initial commissioning process. After that, they must be changed by Miele Service.

These settings are also described under “Supervisor level”.

Switch on the tumble dryer

■ Press the ⏻ control.

The welcome screen will light up.

Setting the language

You will be asked to select the language you require for the display (supervisor language). It is possible to change the language at any time using the supervisor level.

■ Touch the ∧ or ∨ sensor control until the language you want appears in the display.

■ Touch the sensor control for the language you want.

The selected language is marked with a frame and the display will change to next setting.

Reference to external appliances

A reference to external hardware appears.

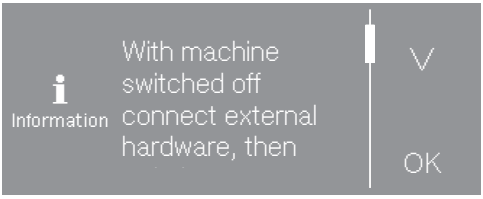

- Touch the ∨ sensor control to read all of the text in full.
- Confirm with the OK sensor control.

Before initial commissioning, connect the XCI box or slide a communication module into the slot on the back of the tumble dryer. The tumble dryer must be disconnected from the mains for this process. Then start the commissioning process.

Setting the display brightness

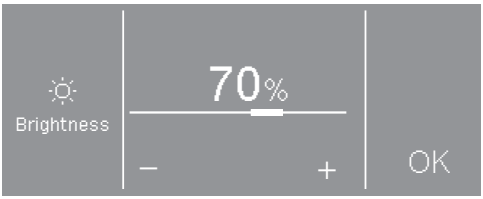

- Set the brightness you want with the – and + sensor controls and confirm your selection with the OK sensor control.

The display will change to the next setting.

Confirming the time request

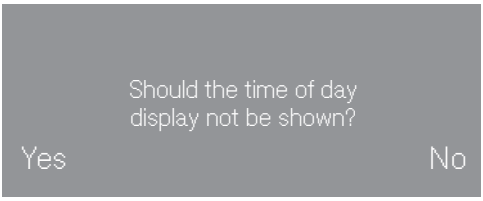

- Touch the yes or no sensor control.

If you select yes, the system will skip the time setting.

If you select no, the display will switch to the time setting.

Setting the time

- Use the ∨ and ∧ sensor controls to enter the time and confirm your entry with OK.

The display will change to the next setting.

Selecting programme packages

You can select various programmes packages.
The programmes selected from the programme packages are displayed under ☆ *Special programmes*.

- Touch the ∧ or ∨ sensor control until the programme package you want appears in the display.
- Touch the programme package sensor control.

The display shows the associated programmes.

The activated programmes are marked with a frame.

- Touch the sensors for the programmes.

The programmes are activated (framed) or deactivated (no frame).

- Confirm with the OK sensor control.

The display switches back to Programme packages.

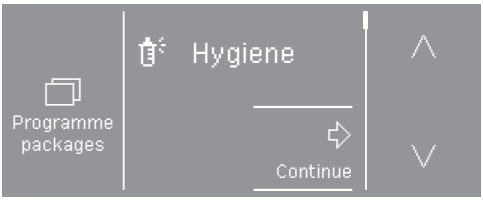

- Select other programme packages or confirm your selection with the Continue sensor control.

The display will change to the next setting.

Setting up a payment system

This option allows you to set up an existing payment system.

<u>If you do not wish to set up a payment system:</u>

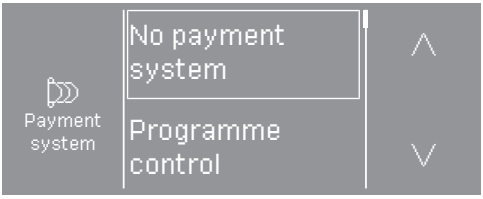

- Touch the No payment system sensor control.
- Continue reading from “Completing the commissioning process” under “Initial commissioning”.

<u>If you wish to set up a payment system:</u>
These settings can only be changed during the initial commissioning process. If you wish to change the settings after the commissioning process, please contact Miele Service.

- Touch the ∨ sensor control repeatedly until the setting you require appears.

- Touch the sensor control for the setting you want.

The process for setting up a payment system is described under “Payment systems” in the chapter “Supervisor level”.

Completing the commissioning process

The commissioning process is complete when a programme lasting longer than 20 minutes has been carried out in full.

> If the power is interrupted prior to the start of the first drying programme (e.g. if the machine is switched off with the ⏻ button), the initial commissioning process can be completed again. Once a drying programme has been running for over 20 minutes, the initial commissioning process cannot be performed again.

- Turn the programme selector to ☆ *Special progs.*

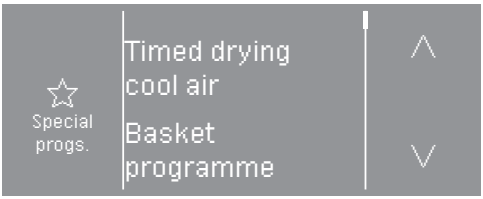

- Touch the ∧ or ∨ sensor control until Timed drying cool air appears.
- Touch the Timed drying cool air sensor control.

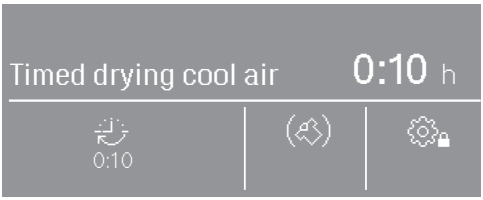

- Touch the sensor control.

- Touch the ∧ sensor control in the top right until 0:20 appears.
- Touch the OK sensor control.
- Touch the flashing *Start*/*Stop* sensor control.

After this programme has finished, the tumble dryer is ready for use.

Washing

- Heavily soiled laundry must be washed particularly thoroughly. Use sufficient detergent and select a high temperature. If in doubt, wash the items several times.
- New, coloured items must be washed thoroughly and separately. Do not dry these items with light coloured garments. There is the risk of colours running and discolouring other garments or even plastic components in the tumble dryer. Dark coloured fluff can also settle on light coloured garments and vice versa.

Drying

⚠ Damage due to foreign objects which were not removed from the laundry.
Foreign objects can melt, burn, or explode.
Ensure that any foreign objects, e.g. detergent dispensing balls, lighters, etc., have been removed from the laundry.

⚠ Risk of fire due to incorrect use and operation.
The laundry can burn and destroy the tumble dryer and the surroundings.
See the section on “Warning and safety” for further information.

- Check seams and stitching to ensure that the items are intact. This way you will avoid the danger of fillings coming out and causing a fire.
- Sew in or remove underwiring from bras.

Care label symbols

Drying	
	Normal/higher temperature
	Low temperature*
* Select the extra option *Low temperature*.	
	Do not tumble dry
Ironing	
	Very hot
	Hot
	Warm
	Do not iron

2. Load the tumble dryer

Loading the laundry

Preventing textile damage.
Before loading, read chapter “1. Notes on correct laundry care.”

- Open the door.
- Load the laundry.

Preventing textile damage.
When closing the door, make sure that laundry does not get trapped in the door opening.

Do not overload the drum. Overloading can cause unnecessary wear and tear to the laundry and and cause a disappointing drying result. It can also cause more creasing.

Closing the door

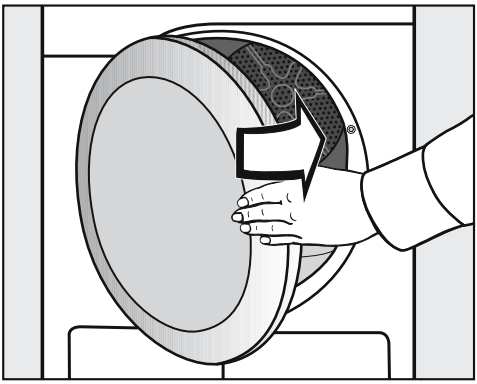

- Shut the door with a gentle swing.

Switch on the tumble dryer

■ Press the ⏻ control.

The drum lighting will come on.

The drum lighting will automatically go out after a few minutes and/or after the start of a programme to save energy.

Selecting a programme

Selecting standard programmes with the programme selector dial

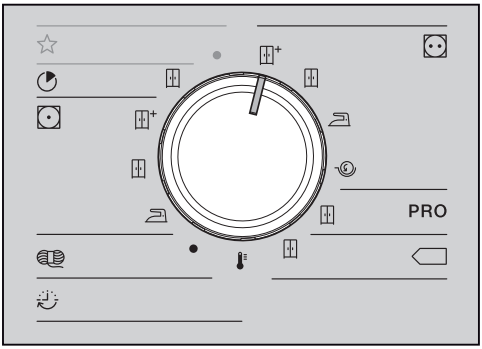

■ Turn the programme selector to the required programme.

The display will change to the main menu for that programme.

Selecting special programmes via the ☆ programme selector position

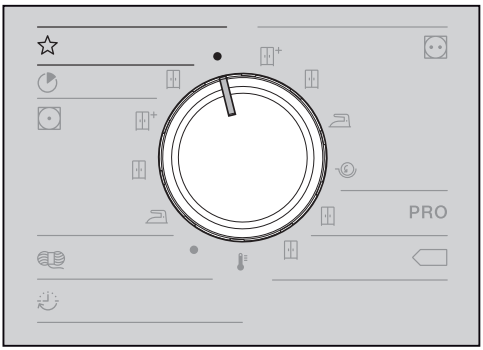

■ Turn the programme selector.

You can select the required programme via the display.

■ Touch the ∧ or ∨ sensor control until the programme you want appears in the display.

■ Touch the sensor control for that programme.

The display will change to the main menu for that programme.

Main menu for a programme

Select the drying level

The pre-set drying level for many programmes can be changed if required. Different drying levels are available depending on the programme.

- For standard programmes, you can select the drying level directly using the programme selector.
- For some programmes under ☆ *Special progs.*, you can change the drying level on the display.

■ Select a programme from ☆ *Special progs*.

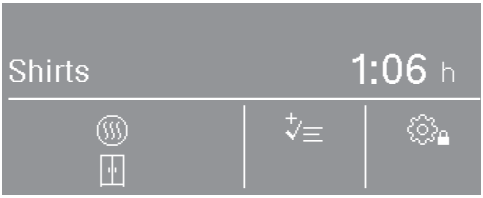

Underneath the symbol, another symbol displays the pre-set drying level (example shows *Normal*).

■ Touch the sensor control.

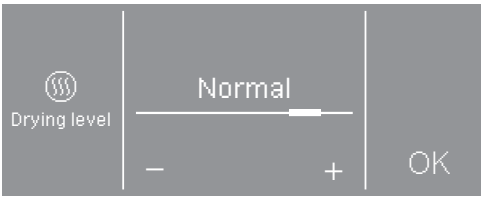

■ Touch the – or + sensor control to change the drying level.

■ Touch the OK sensor control.

Selecting the duration (timed programmes)

You can select the programme duration yourself.*

* The time frame for the selected programme duration can be limited by Miele Service.

- Timed drying warm air = 0:20-2:00 hours
- Timed drying cool air = 0:10-2:00 hours
- Basket programme = 0:20-1:30 hours
- Timed drying warm air, hygiene = 0:50-2:00 hours

■ Select one of these programmes.

The pre-set duration appears under the symbol (in this example 0:20 minutes).

■ Touch the sensor control.

■ Touch the ∧ or ∨ sensor controls to select the hours and/or minutes.

■ Touch the OK sensor control.

Selecting extra options

The drying programmes can be augmented with various extra options.

■ Touch the sensor control.

If the symbol appears, this means that only one extra can be selected. The message Active also appears after the sensor control has been touched.

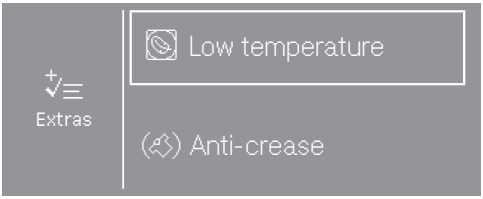

■ Touch the sensor control for the extra you want.

The symbol for the selected extra lights up under the symbol.

Not all extras can be selected with every programme, only those programmes for which it makes sense.

Low temperature

Delicate fabric (with the symbol on the care label, e.g. acrylic garments) is dried at a lower temperature. The programme duration is also longer.

Anti-crease

After the programme has finished, the drum will continue to rotate in a certain rhythm, depending on the selected programme. This helps to prevent creasing after the programme has ended.

The anti-crease function is switched off as the factory default setting. It can be switched on in the supervisor level with a variable duration of up to 12 hours.

Selecting delay start

Delay start must be activated in the supervisor level to allow it to be selected. In this case, one of these 3 symbols also lights up in the display: , , .

- Touch the sensor control with the clock symbol.

Depending on the delay start settings in the supervisor level, different delays in 15-minute intervals can be selected:

- The programme finish time: Finish at
- The programme start time: Start at
- The time to wait until the programme starts: Start in

The maximum delay start period is 24 hours. The left-hand side of the display shows what you are able to enter.

- Touch the ∧ or ∨ sensor controls to select the hours and/or minutes.
- Touch the OK sensor control.

If the delay start time is set to Finish at or Start at, the current times will be displayed.

- Touch the OK sensor control.

The start delay begins when the programme starts.

Changing/cancelling delay start

Before the programme starts

- Touch the sensor control with the clock symbol.
- You can change or delete the time.

After the programme has started

- Touch the *Start/Stop* sensor control.
- You can either cancel the programme or start it straight away.

Payment systems

Tip: If your machine is connected to a payment system, the amount of payment required will appear in the display.

Once the programme has started, do not open the door or cancel the programme.
Depending on the settings, money may be lost in the payment system.

Starting the programme

The programme can be started as soon as the *Start*/*Stop* sensor control is flashing on and off.

■ Touch the *Start*/*Stop* sensor control.

The drying programme starts. The *Start*/*Stop* sensor control lights up.

If a start delay has already been selected, this starts to count down before the drying programme starts automatically.

Drying and the time left for the drying programme are displayed.

The drying level reached is displayed if a drying level programme is running.

Tip: Touching the i sensor control allows you to display the options selected.

Programme duration/Estimated time remaining

The programme duration depends on the quantity of laundry, the type of fabric and the residual moisture in the laundry or also the water hardness. The running time for drying level programmes can therefore vary or “jump”. The tumble dryer's electronic control system adapts to these factors and then adjusts the displayed programme duration with increasing accuracy.

6. End of programme – unloading the drum

End of programme

The laundry will be cooled down shortly before the end of the programme. The laundry can now be unloaded.

The programme has ended when only Finish is left on the display.

If *Anti-crease* ()* has been selected, the drum rotates in intervals. This reduces creasing if the laundry cannot be removed straight away.

* The anti-crease function is switched off as the factory default setting.

The tumble dryer will switch off automatically 15 minutes after the end of a programme.

Unloading the drum

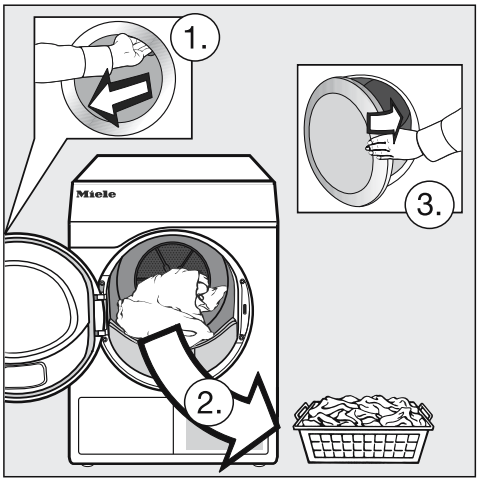

- Open the door.
- Remove everything from the drum.

Items left in the tumble dryer could be damaged by overdrying when the tumble dryer is used the next time.
Always remove all items from the drum.

- Switch the tumble dryer off.

Observe any maintenance notes

This tumble dryer requires regular maintenance, particularly if it is used on a continuous basis.

Tip: Please see “Cleaning and care” for details. In that chapter, start by reading the section “When to clean”.

All weights marked with * are based on the weight of dry laundry.

Standard programmes

Cottons	**Max. load 7 kg***
Normal plus, Normal	
Use for	- Single and multi-layered cotton items. - Towelling, T-shirts, underwear, jersey bed linen, baby clothes. - Workwear, jackets, cotton blankets, aprons, tea towels, bed linen, towels, table linen.
Note	Do not use overdry jersey fabrics (e.g. T-shirts, underwear, baby clothes) because they can shrink.
Hand iron, Machine iron	
Use for	- Cotton and linen fabrics. - Table linen, bed linen, starched laundry.
Tip	To prevent laundry from drying out, it should be rolled up until you are ready for ironing.
PRO **Cottons PRO**	**Max. load 7 kg***
Use for	Cotton items such as those described under *Cottons, Normal* with normal residual moisture.
Note	Items are dried to a *Normal* level only in this programme.
Cottons Eco	**Max. load 7 kg***
Use for	Cotton items such as those described under *Cottons, Normal* with normal residual moisture.
Note	- Items are dried to a *Normal* level only in this programme. - The programme is the most energy-efficient for drying cotton items with normal residual moisture levels.
Note for test institutes:	Test programme in accordance with Regulation 392/2012/EU measured in accordance with EN 61121.

Express	**Max. load 4 kg***
Use for	Hardy items for the *Cottons* programme with the *Normal* drying level.
Note	This programme is shorter compared to the *Cottons* programme.
Minimum iron	**Max. load 4 kg***
Normal plus, Normal, Hand iron	
Use for	- Minimum iron fabrics made of synthetic, cotton or mixed fibre. - Workwear, overalls, pullovers, dresses, trousers, table linen, tights.
Woollens	**Max. load 2 kg***
Use for	Woollen garments and fabric containing wool blends, e.g. pullovers, cardigans, tights.
Note	- Wool and wool blend items are only fluffed up; they are not dried completely. - Remove garments as soon as the programme has finished and leave to finish drying at room temperature.
Timed drying warm air	**Max. load 7 kg***
Use for	- Voluminous items e.g. jackets, pillows and padded items. - Fabrics made up of multiple layers, e.g. heavy cotton table cloths. - Individual items of laundry, e.g. towels, swimwear, tea towels.
Note	- Used for airing multi-layered fabrics or large items that dry unevenly due to their make-up. - Used for drying a few individual garments. - Do not select the longest drying time to start with. Check the items as you are drying them to find the optimum time.

☆ Special programmes

Towelling	**Max. load 7 kg***
Use for	Large quantities of single-layered and multi-layered towelling items. These include, for example, towels, bath robes, face flannels, flannel bed linen.
Note	Items are dried to a *Normal plus* level only in this programme.
Shirts	**Max. load 2 kg***
Normal, Hand iron plus	
Use for	Shirts and blouses.
Delicates	**Max. load 4 kg***
Normal plus, Normal, Hand iron plus	
Use for	- Delicate synthetic, cotton or mixed fibre fabrics. - Lightweight pullovers, dresses, trousers, overalls, table cloths, shirts and blouses. - Lingerie and appliquéd fabrics.
Note	Less creasing occurs in this programme.
Tip	Reducing the load will reduce creasing even further.
Smoothing	**Max. load 1 kg***
Use for	- Cotton and linen fabrics. - Minimum iron items made of cotton, synthetics or mixed fibres, e.g. trousers, jackets, shirts.
Note	- Smooths out creasing caused during the spin cycle in the washing machine. - Items are not dried completely. - For extra gentle smoothing, select the *Low temperature* extra option. - Remove garments as soon as the programme has finished and leave to finish drying on a line or hangers.
Denim	**Max. load 3.5 kg***
Normal, Hand iron plus	
Use for	Denim garments, e.g. jeans, jackets, skirts, shirts.

Silks	**Max. load 1 kg***
Use for	Silk garments which are suitable for tumble drying, e.g. blouses and shirts
Note	- Programme for reduced creasing. - Items are not dried completely in this programme. - Remove the garments as soon as the programme has finished.
Automatic plus	**Max. load 5 kg***
Normal plus, Normal, Hand iron plus	
Use for	Mixed loads of garments suitable for the *Cottons* and *Minimum iron* programmes.
Microfibre	**Max. load 7 kg***
Normal plus, Normal	
Use for	Microfibre mops and cleaning cloths.
Timed drying - Cool air	**Max. load 7 kg***
Use for	Any item that only needs airing.

Basket programme	Basket load 3.5 kg
Fabric type/Items	- Always follow the operating instructions for the tumble dryer basket. - Use this programme to dry or air items which are suitable for drying in a tumble dryer but which are not suitable for drying using mechanical action.
Note	- This programme may only be used with the Miele tumble dryer basket (optional accessory). - A satisfactory drying result cannot be achieved without the drying basket. - Make sure that the item (bag, boot, etc.) does not touch the drum: the tumble dryer drum will rotate, causing damage to the tumble dryer basket and drum if it is incorrectly loaded. See the operating instructions supplied with the tumble dryer basket. - Always follow the operating instructions for the tumble dryer basket. 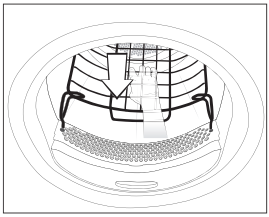

Programme packages

You can select various programmes packages.
The programmes selected from the programme packages are displayed under ☆ *Special programmes*.

Sport

Outerwear	**Max. load 2.5 kg***
Normal, Hand iron plus	
Use for	Outerwear which is suitable for tumble drying.
Proofing	**Max. load 2.5 kg***
Textiles	Microfibre fabrics, skiwear, outdoor wear, fine, close-weave cotton garments (poplin), and table linen which are suitable for drying in a tumble dryer.
Note	- This programme includes an additional proofing fixing phase. - Only use proofing agents that are stated by the manufacturer as being “suitable for use on membrane textiles”. These agents contain fluorochemical compounds. - Do not dry items which have been treated with proofing agents containing paraffin. This substance is a fire risk. - Items are dried to a *Normal* level only in this programme.
Sportswear	**Max. load 3 kg***
Use for	Sportswear that is suitable for drying in a tumble dryer.
Note	Items are dried to a *Normal* level only in this programme.

Home textiles

Down bedding	**Max. load 2 kg***
Use for	Bedding suitable for tumble drying (duvets or pillows filled with down or feathers).
Note	Items are dried to a *Normal* level only in this programme.
Tip	Feathers have a tendency of developing a strong odour when they are warm. Allow bedding to air outside the tumble dryer after tumble drying.
Synthetic bedding	**Max. load 2 kg***
Use for	Bedding suitable for tumble drying (duvets or pillows with a synthetic filling).
Note	Items are dried to a *Normal* level only in this programme.
Large items	**Max. load 4 kg***
Normal plus, Normal, Hand iron, Machine iron	
Use for	Robust, larger items for the *Cottons* programme. These include, for example, blankets, multi-layered covers, large voluminous items.

Hygiene

In the hygiene programmes, items will be dried with a temperature that is constant over an extended period (longer temperature holding time). This kills off micro-organisms such as germs or dust mites and reduces allergens in the laundry.
If a hygiene programme is cancelled early, micro-organisms will not be killed.
Do not cancel this programme.

Cottons hygiene	**Max. load 4 kg***
Use for	Cotton or linen items that come into direct contact with the skin. These include, for example, underwear, baby clothes, hand towels, bath towels, bathrobes, spa towels and flannels.
Note	Items are dried to a *Normal* level only in this programme.
Minimum iron hygiene	**Max. load 4 kg***
Use for	- Minimum iron fabrics made of synthetic, cotton or mixed fibre. - Workwear, overalls, pullovers, dresses, trousers, table linen, tights.
Note	Items are dried to a *Normal* level only in this programme.
Timed drying warm air, hygiene	**Max. load 4 kg***
Use for	- Voluminous items e.g. jackets, pillows and padded items. - Heavy, multi-layered cottons, e.g. table cloths or blankets.
Note	- Used for airing multi-layered fabrics or large items that dry unevenly due to their make-up. - Used for drying a few individual garments. - Do not select the longest drying time to start with. Check the items as you are drying them to find the optimum time.

Payment systems

Opening the door or cancelling the programme after it has started may cause a loss of credit (depending on how the tumble dryer was set up*).

* Either during the commissioning process or subsequently, a Miele service technician can reset the payment system so that programming changes can be made.

Changing a programme once it has started

You cannot change to another programme once a programme has started (this prevents unintentional alterations). You will need to cancel the current programme before you can select a new one.

⚠ Risk of fire due to incorrect use and operation.
The laundry can burn and destroy the tumble dryer and the surroundings.
See the section on “Warning and safety” for further information.

Programme selection not possible appears if the programme selector has been moved. The text disappears when the programme selector is set to the original programme.

Cancelling a programme

- Touch the *Start*/*Stop* sensor control.

A message will appear in the display asking if you wish to cancel the programme.

- Touch the Yes sensor control.

Reselecting a cancelled programme

- Open and close the door.
- Select and start a new programme.

Adding laundry

- Open the door.

⚠ Risk of burns by touching hot laundry in the drum.
You could burn yourself.
Let the laundry cool down and remove it carefully.

- Add items.
- Close the door.
- Start the programme.

Interruption to the power supply

If the power supply is interrupted because the tumble dryer has been switched off with the button ⏻:

- Switch the tumble dryer on.
- Touch the *Start*/*Stop* sensor control.

If the power supply is interrupted by a power cut:

- When power is restored, confirm with OK.
- Touch the *Start*/*Stop* sensor control.

Time remaining

Altering the programme sequence can cause adjustments in the h min time remaining display.

When to clean

A two-piece fluff filter in the air supply area collects all fluff generated during the drying process.

Failure to clean the filter regularly could increase drying times.

⚠ Fire hazard due to irregular maintenance.

Too many fluff deposits in the fluff filter and tumble dryer will result in a risk of fire.

Check the fluff filter and air duct area on a regular basis. Always clean the filter if you find any fluff deposits.

⚠ Damage caused by a missing or damaged fluff filter.

Too many fluff deposits in the fluff filter and tumble dryer will result in a risk of appliance malfunctions and a risk of fire.

Never use the tumble dryer without the fluff filter. Always replace a damaged fluff filter immediately.

Always clean the appliance when this instruction appears in the display:
Clean the fluff filter and rinse the plinth filter. or Clean the filters

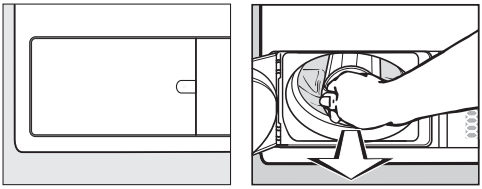

- To delete the message: Open the fluff filter flap for at least 10 seconds while the tumble dryer is switched on.

Cleaning the fluff filters

Removing the fluff filter

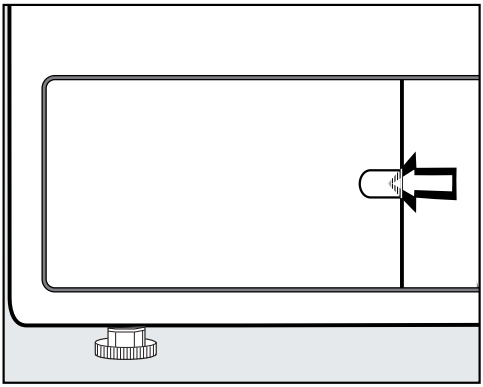

- Reach behind the catch with your finger.
- Open the fluff filter flap.

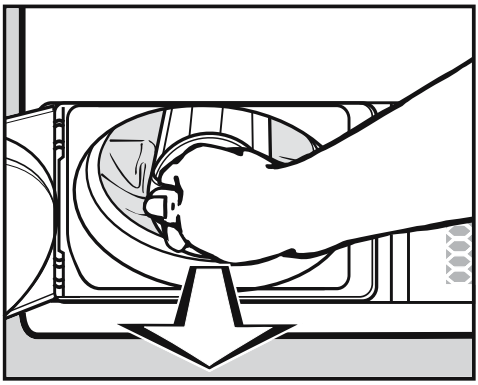

- Use the handle to pull out the fluff filter.

Dismantling the fluff filter

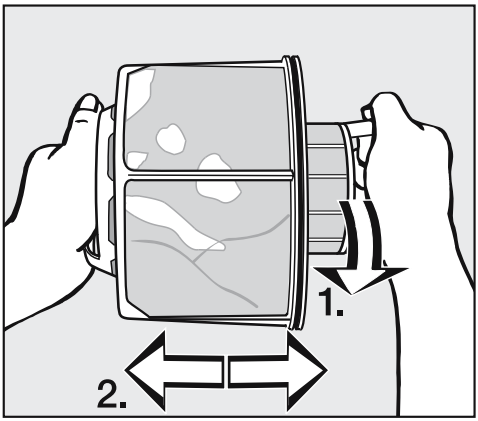

- Hold onto both handles on the fluff filter.
- Turn the inner section of the fluff filter anti-clockwise (1) slightly until you feel it engage.
- Pull apart the two parts of the fluff filter (2).

Cleaning the fluff filter components when dry

Tip: Use a vacuum cleaner to achieve the best possible cleaning results.

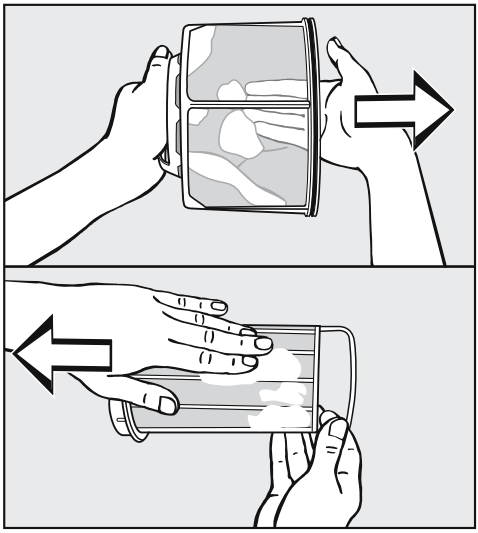

- Use your fingers or a vacuum cleaner to wipe fluff off the filter.

Cleaning the fluff filter components when wet

If there is a lot of compacted fluff on the fluff filter components, you should also clean them under warm running water.

> If the fluff filter is wet, it could cause operational faults.
>
> Shake both parts thoroughly and then dry them carefully.

Cleaning the air supply area

- Open the door.

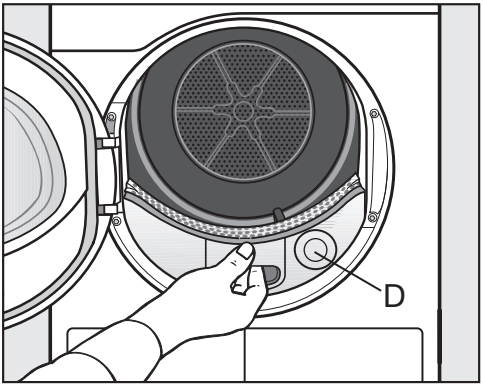

The round lid **(D)** serves no purpose and cannot be removed.

- Pull out the cover to the air supply area.

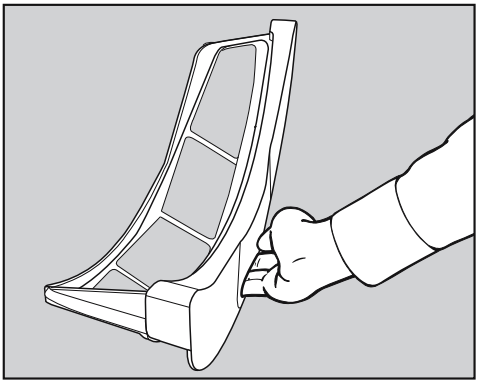

- Use a damp cleaning cloth to clean the cover to the air supply area.
- Place the cover to the air supply area to one side.

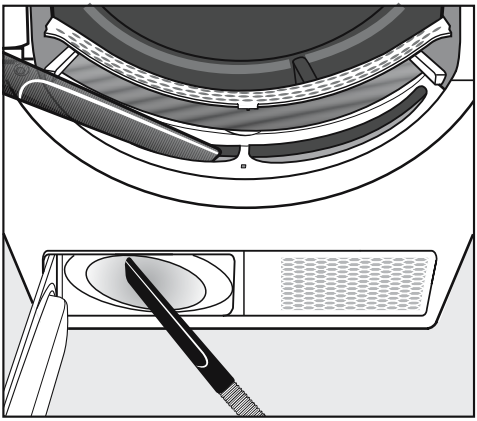

- Fluff can be removed with a vacuum cleaner.

The fan wheel inside the tumble dryer may be clogged with detergent residue and fluff.

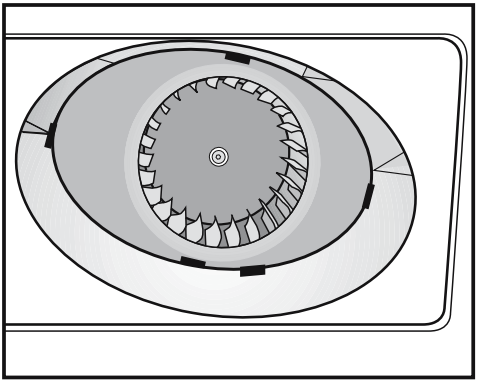

- Carefully remove the following with a damp cleaning cloth
  . . . Deposits on the fan wheel.
  . . . Fluff from the area in front of the fan wheel.

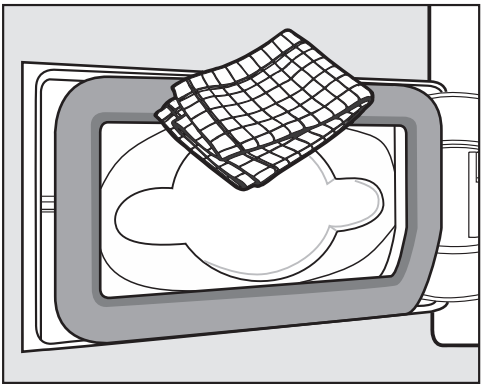

■ Use a damp cleaning cloth to remove any fluff. Make sure that you do not damage the rubber seal when doing this.

Assembling and fitting the fluff filter

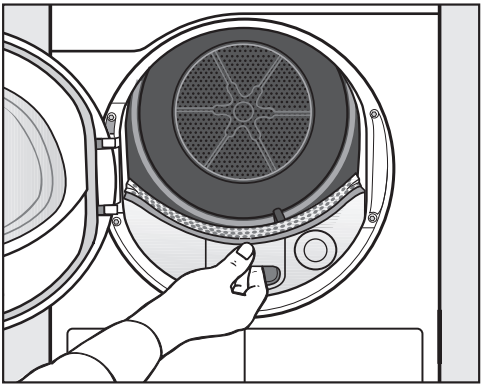

■ Slide in the cover to the air supply area.

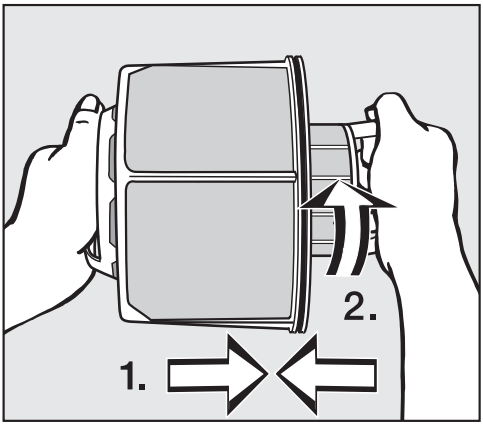

■ Insert the inner fluff filter component into the outer component (1).

■ Turn the inner section of the fluff filter clockwise (2) slightly until you feel it engage.

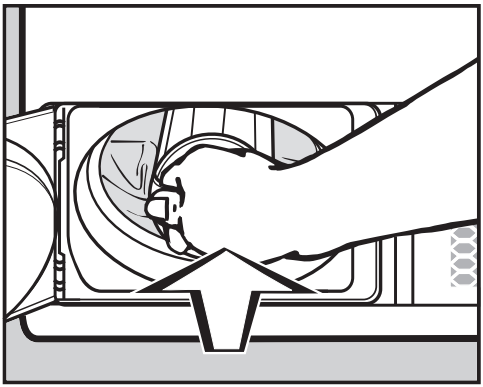

■ Slide in the fluff filter until you feel it engage.

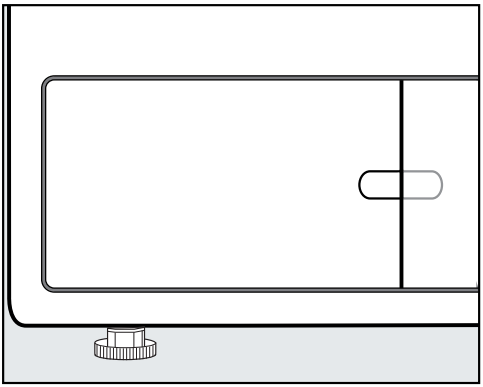

- Close the fluff filter flap.

The filter must be inserted and the fluff filter flap must be closed to ensure the system is correctly sealed and that the tumble dryer will function correctly.

Cleaning the tumble dryer

Disconnect the tumble dryer from the electrical supply.

⚠ Damage caused by the use of unsuitable care products.

Unsuitable care products could damage plastic surfaces and other parts.

Do not use any solvents, abrasive cleaners, glass cleaners, or all-purpose cleaners.

⚠ Danger of electric shock caused by water.

There is a risk of electric shock if water runs over or into the tumble dryer.

Never spray the tumble dryer with water. Only ever clean the appliance with a slightly damp, soft cloth.

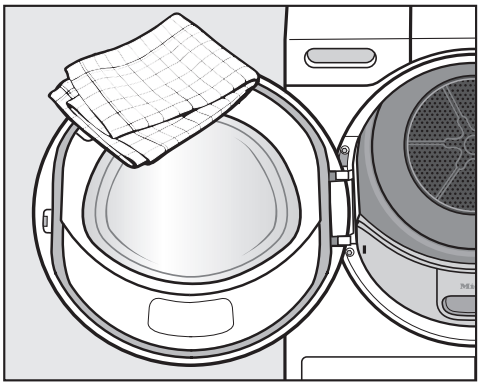

- Clean the tumble dryer and the seal on the inside of the door with a slightly damp soft cloth and a mild solution of washing-up liquid and water.
- Dry all parts with a soft cloth.
- The drum and other stainless steel parts can be cleaned with a suitable stainless steel cleaner.

Many malfunctions and faults that can occur in daily operation can be easily remedied. Time and money will be saved because a service call will not be needed.

The following guide may help you to find the reason for a malfunction or a fault, and to correct it.

The display indicates the following messages or faults

Message	Cause and remedy
Drum empty or the laundry is too dry. **lights up after a programme has been cancelled.**	This is not a fault. In some programmes, if the drum has been under-loaded or is empty, the programme will be cancelled. This can also happen if the items are already dry. ■ Open the door and check the laundry. ■ Add items if necessary. ■ Close the door to resume drying. Dry individual items using the *Warm air* programme.
Power outage. Programme stopped	There has been a power outage. ■ When power is restored, confirm with OK. ■ Touch the *Start/Stop* sensor control.
Close the fluff filter compartment.	The fluff filter flap for the fluff filter is open. ■ Close the fluff filter flap. The message will go out.
	Never open the fluff filter flap during active programme operation. Opening the fluff filter flap during active programme operation interrupts the airflow. The programme will also be cancelled. If the airflow is interrupted, the tumble dryer cannot discharge the hot air quickly enough. The tumble dryer can be permanently disabled by this safety feature. If this happens, contact the Miele Customer Service Department.
Clean the filters **lights up after a specific period of time following the end of a programme.**	Please see “Cleaning and care” for notes on cleaning. ■ Clean the fluff filter. ■ Check and clean the air supply area. ■ To delete the message: Open the fluff filter flap for at least 10 seconds while the tumble dryer is switched on.

Message	Cause and remedy
ℹ Clean the fluff filter and rinse the plinth filter. **lights up at the end of a programme.**	The tumble dryer is not working correctly or economically. Possible causes: clogging caused by fluff or detergent residue. ■ Clean the fluff filter. ■ Check and clean the air supply area. Please see “Cleaning and care” for notes on cleaning. ■ To delete the message: Open the fluff filter flap for at least 10 seconds while the tumble dryer is switched on.
Finish / Cooling down **lights up and the drying process is not yet finished.**	This is not a fault. The laundry is still being cooled. The programme is just about to end. ■ You can remove the laundry and spread it out to cool down or leave it in the tumble dryer to cool down until the end of the programme.
Rinse the fluff filter and the plinth filter. Check the airways. **lights up after a programme has been cancelled.**	You have attempted to dry only a few items of varying size. A smaller item has been sucked into the loading area in the door and is clogging the holes in the laundry deflector. ■ To delete the message: touch the OK sensor control. ■ Open the tumble dryer door. ■ Remove the item that is blocking the holes. ■ Always dry small, individual items together with larger items. If you are able to exclude all this, an even more major problem has occurred. See below.
	The system has been clogged by fluff or detergent residue. ■ Clean the fluff filter and air channels. ■ Check the ducting to make sure the drying air can be extracted without any obstructions. Please see “Cleaning and care” for notes on cleaning. Always replace a damaged fluff filter. ■ To delete the message: touch the OK sensor control.

Message	Cause and remedy
⚠ Fault F. If restart fails, call Service. **lights up after a programme has been cancelled.**	There is no obvious cause. ■ Note the prompt in the display. ■ Touch the OK sensor control. If the programme terminates again with the same error message, then there is a fault. Contact Miele Service.
⚠ Obstruction detected. Untangle laundry and restart **lights up after a programme has been cancelled.**	The laundry is unevenly distributed or has rolled up. ■ Open the door and loosen the laundry. Take out some of the laundry if necessary. ■ Close the door. ■ Start a programme.

Unsatisfactory drying results

Problem	Cause and remedy
The laundry is not sufficiently dry.	The load consisted of different types of fabric. ■ Finish drying using the *Timed drying warm air* programme.
Large items of laundry have rolled up, causing a problem. The individual items of laundry are still damp.	The laundry could not be disentangled in the programme you selected. Smaller items have rolled up into one. ■ Disentangle the laundry. ■ Select the *Large items* programme.
	If the *Large items* programme does not appear in the display for selection, you can activate it subsequently. How to activate a programme subsequently is described in “Supervisor level” – “Opening the Supervisor level” and “Programme packages”.
Laundry or feather filled pillows smell after drying.	The laundry was washed with insufficient detergent Feathers are a natural product and this is quite normal. ■ Laundry: use sufficient detergent next time. ■ Allow feather pillows to air after tumble drying.
Items made of synthetic fibres are charged with static electricity after drying.	Synthetic fibres tend to attract static charge. ■ Static charge can be reduced by adding a fabric conditioner to the final rinse in the washing programme or a fabric conditioner sheet to the load when drying.
There is a build-up of fluff.	Fluff is principally the result of friction when garments are being worn and to some extent when they are being washed. Machine drying hardly causes any fluff to form and has no appreciable effect on the lifetime of the fabric. Fluff is collected by the fluff filters and fine filter and can be easily removed ■ (see “Cleaning and care”).

The drying cycle duration is very long

Problem	Cause and remedy
The drying process goes on too long or even switches off.*	In some circumstances, you may be asked to clean the air channels/filters. ■ Check for all of the possible causes described below.
	Detergent residues, hair and fine fluff can clog the filters. ■ Clean the fluff filter (see “Cleaning and care”). ■ Clean the air supply area. ■ You can remove the cover in the loading area to clean the air supply area underneath.
	The ducting or its openings are clogged with hair or fluff, for example. ■ Check and clean all components in the ducting (e.g. wall pipe, external grille, bends, elbows, etc.).
	The air supply situation is not adequate in small, unventilated rooms. ■ While drying, open the door or window for ventilation.
	The laundry is too damp. ■ Spin using a higher spin speed in the washing machine.
	The drum is too full. ■ Do not exceed the maximum load for the programme selected.
	Metallic components, e.g. zippers, have prevented the tumble dryer from registering the correct moisture level. ■ Open any zips next time. ■ If the problem recurs, dry these items using the *Timed drying warm air* programme.

* Switch the tumble dryer off; wait a short while before starting a new programme.

General problems with the tumble dryer

Problem	Cause and remedy
Condensation is forming in the drum.	The tumble dryer is installed on a shared exhaust air duct. ■ The tumble dryer must always be installed with a non-return flap when using a shared exhaust air duct. ■ Check the non-return flap for possible defects on a regular basis and replace the flap if necessary.
The drum lighting does not come on.	The drum lighting switches off automatically when the door is closed. To save energy, the drum lighting will switch off after a few minutes if the door is left open for an extended period. The drum lighting will come on when the door is opened if the tumble dryer is switched on.
The display is in a different language.	A different language has been selected. ■ Set the language you want. The flag symbol ⚑ will guide you.

Contact in the event of a fault

In the event of any faults which you cannot remedy yourself, please contact your Miele dealer or the Miele Customer Service Department.

You can book a Miele Customer Service Department call-out online at www.miele.com/service.

Contact information for the Miele Customer Service Department can be found at the end of this document.

Please quote the model identifier and serial number of your appliance (Fabr./SN/Nr.) when contacting the Miele Customer Service Department. This information can be found on the data plate.

Please note that telephone calls may be monitored and recorded for training purposes and that a call-out charge will be applied to service visits where the problem could have been resolved as described in this booklet.

Open the door of your tumble dryer to find the data plate:

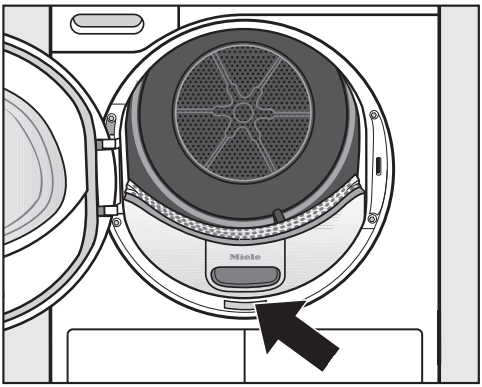

Optional accessories

Optional accessories for this tumble dryer are available from your Miele Dealer or from the Miele Spare Parts Department.

Front view

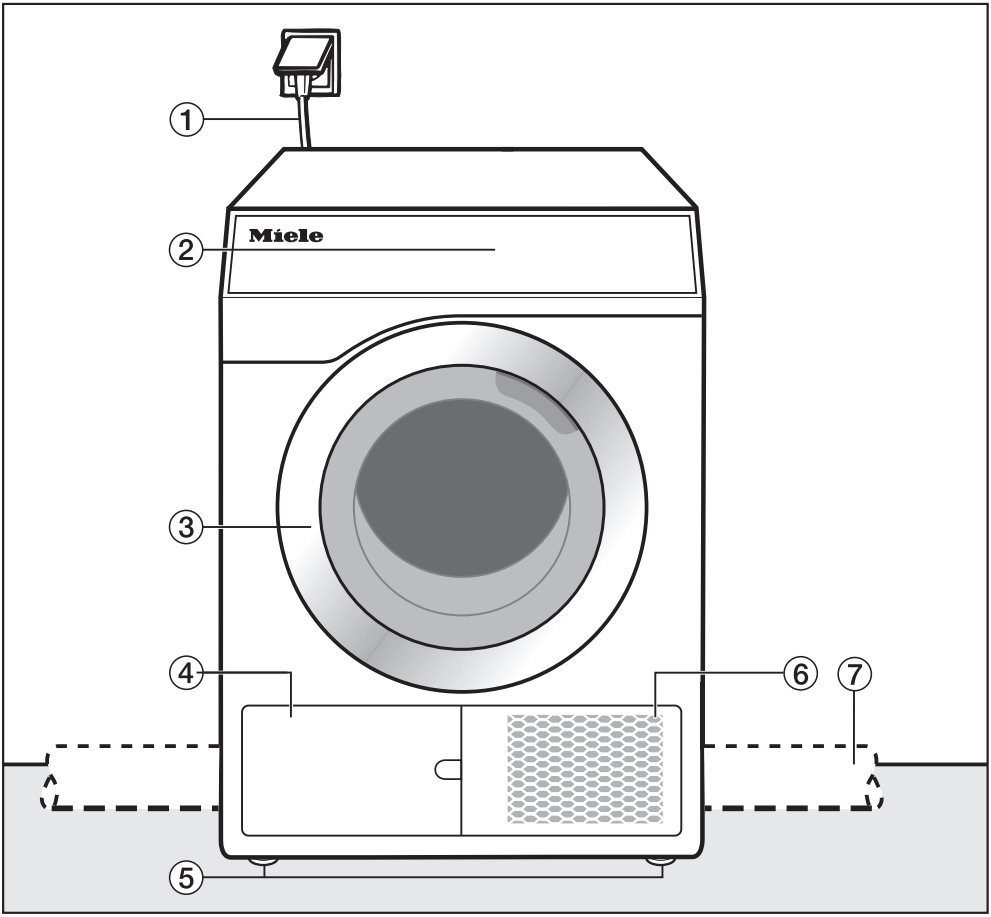

① Mains connection cable

② Control panel

③ Door

④ Fluff filter
Do not open the cover during active programme operation. Only open it if you are prompted to do so by a message in the display. Otherwise a technical fault can occur.

⑤ 4 height-adjustable screw feet

⑥ Intake for air cooling

⑦ On-site ducting (installed on the right or left-hand side)

Rear view

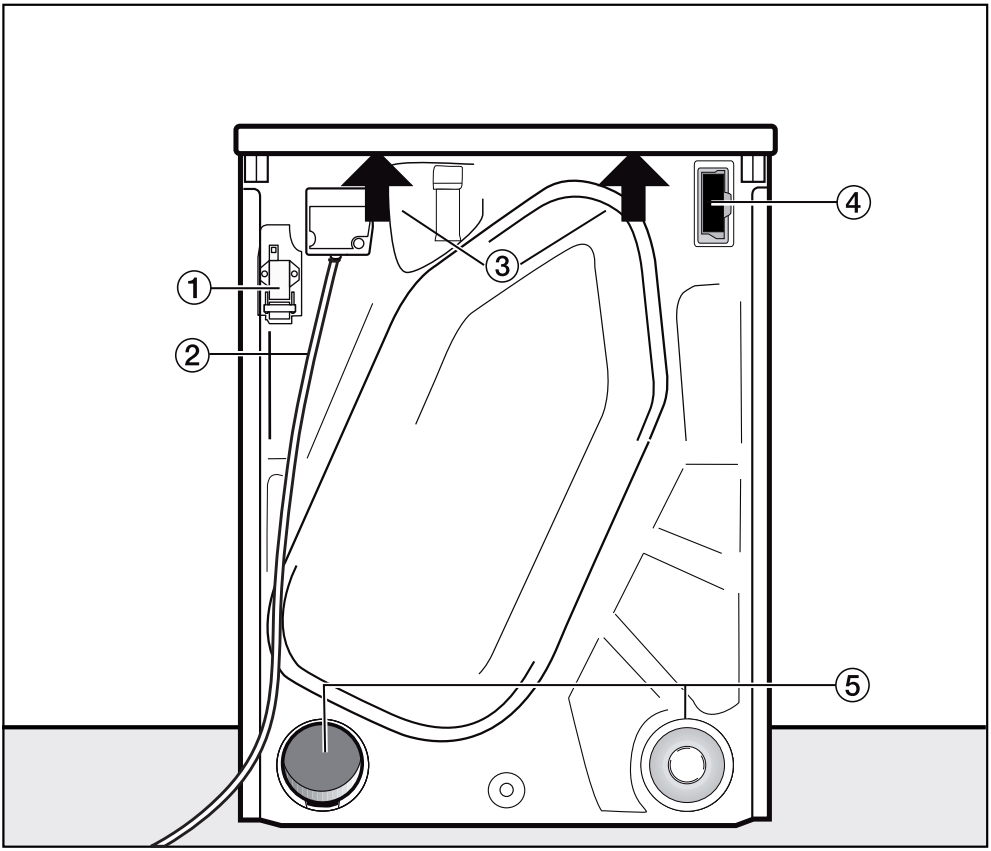

① Interface for communicating with external devices

② Mains connection cable

③ Recesses under the protruding lid for transporting the appliance

④ Module slot (for external communication module)

⑤ Exhaust air connections

– Any exhaust air connections not in use must be sealed with a cap.

Locations

All measurements are in mm.

The distances between the machine and the wall are recommendations to help make it easier to carry out service work. If installation space is limited, the machine can also be pushed up against the wall.

Side view

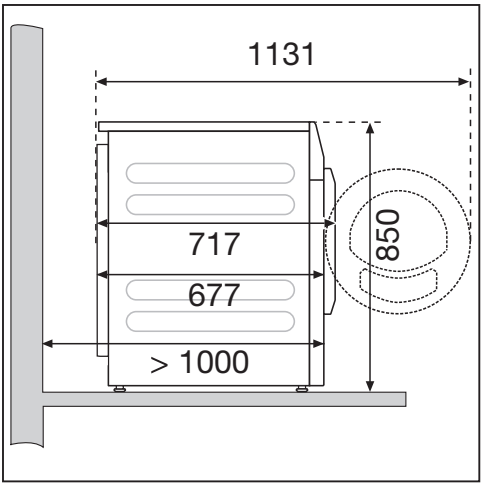

Steel plinth

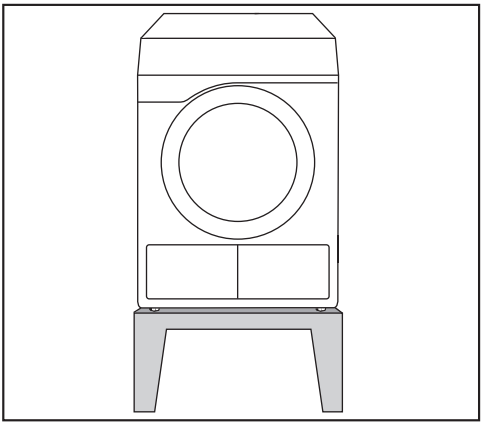

Steel plinth* (open or closed bases)

View from above

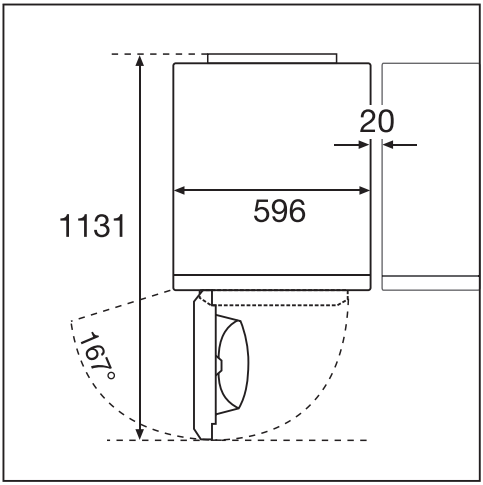

Washer-dryer stack

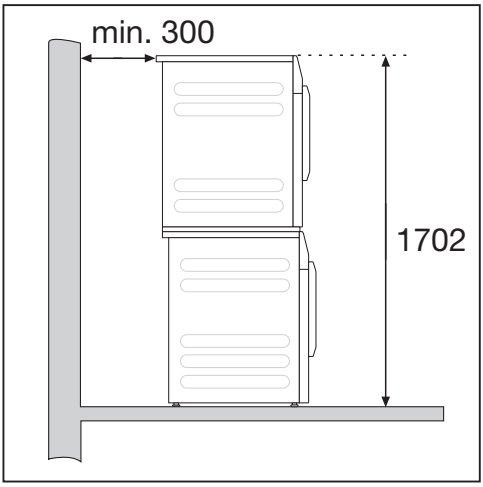

A stacking kit* is required. This must be fitted by a Miele authorised technician.

* Miele accessory available to order

Transporting the tumble dryer to its installation site

⚠ Damage caused by incorrect transportation of the tumble dryer.

If the tumble dryer tips over, there is a danger of injury to people and damage to property.

Ensure that the tumble dryer is stable during transportation.

Transporting the tumble dryer

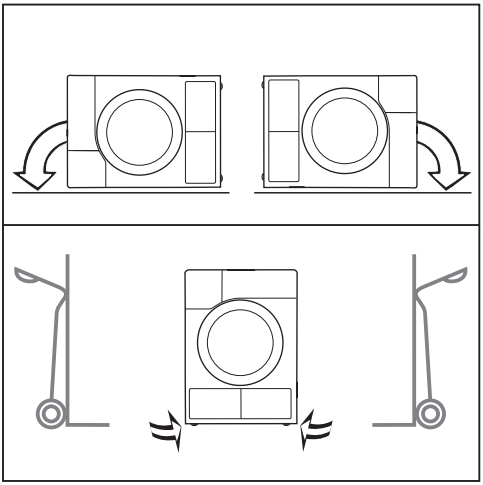

- If the tumble dryer is being transported on its side, it must be tipped onto its left or right side.
- If the tumble dryer is being transported upright, always transport it on a sack truck with its left or right side resting on the truck.

Transporting the tumble dryer to its installation site

⚠ Danger of injury due to unsecure lid.

The fixings at the back of the lid could break as a result of external forces. There is a danger of the lid being pulled off when carrying the machine.

Before carrying the machine, check that the lid is secure where it protrudes at the back of the machine.

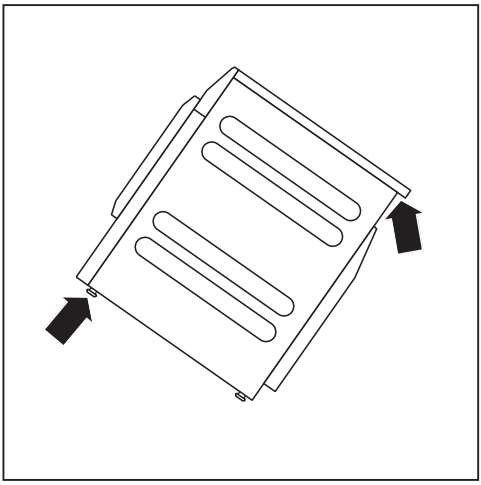

- Carry the tumble dryer by the front feet and by the lid where it protrudes at the back of the appliance.

Installation

Ensure that no closeable door, sliding door, or an oppositely hinged door is installed that would hinder the door of the tumble dryer being opened in any way.

Levelling the tumble dryer

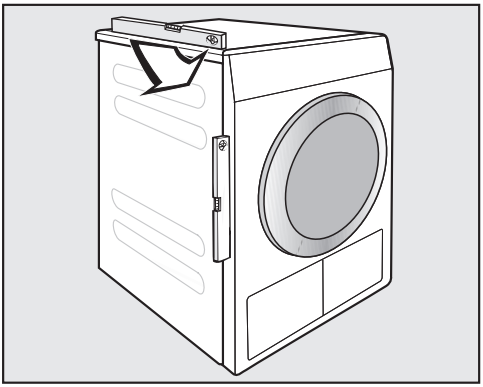

The appliance must stand perfectly level on all four feet to ensure safe and proper operation.

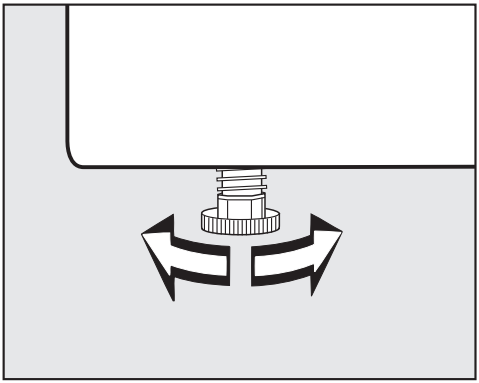

The screw feet can be adjusted to compensate for unevenness in the floor.

This tumble dryer is not suitable for building under.

Never block the ventilation slots on the tumble dryer. Do not block the gap between the bottom of the tumble dryer and the floor with plinth facings, deep pile carpet etc. This would hinder a sufficient flow of air to the tumble dryer.

⚠ Damage caused by incorrectly installed or missing ducting.
Moist air from the tumble dryer can cause damage in the room where the appliance is installed.
Please observe the instructions in “Installation of the ducting”.

External control equipment

An optional accessory unit has to be purchased to set up a connection with external systems:

- XCI box communication module (e.g for peak load control units or payment systems)
- XCI-AD communication adapter (for payment systems only)

Payment systems

This tumble dryer can be fitted with a payment system (optional Miele accessory). In this case, a Miele Service technician must programme the relevant settings in the tumble dryer's electronics and connect the payment system.

Coins/tokens must be removed from the coin box regularly. Otherwise, the payment system will become blocked.

Electrical connection

This description applies to tumble dryers both with and without a mains plug.

The following applies to tumble dryers with a mains plug:

- This tumble dryer is supplied with a mains cable and plug ready for connection.
- The electrical socket must be easily accessible so that the tumble dryer can be disconnected from the electricity supply.

⚠ Damage caused by incorrect supply voltage.
The data plate indicates the nominal power consumption and the appropriate fuse rating.
Compare the specifications on the data plate with those of the mains electricity supply and make sure that they match.

The electrical system must comply with local and national safety regulations (BS 7671 in the UK). We recommend the use of a suitable RCD ⊟.

The tumble dryer may only be connected to a permanent electrical system that conforms to the national and local codes and regulations.

The tumble dryer should never be connected by an extension cable, e.g. power strips, to avoid the risk of fire.

If the machine is hard wired, a dual circuit breaker must be provided on-site. When switched off there must be an all-pole contact gap of at least 3 mm in the isolator switch (including miniature circuit breaker, switch, fuses and relays according to IEC/EN 60947). This connection process must be performed by a qualified electrician.

The plug connector or isolator switch should be easily accessible at all times.

⚠ Risk of electric shock from mains voltage.
If the tumble dryer is disconnected from the mains, protective measures must be taken to ensure that the point of disconnection cannot accidentally be switched on again.
Make sure the isolator is lockable or the point of disconnection is monitored at all times.

New connections, modifications to the system, or servicing of the earthing conductor, including determining the correct fuse amperage, must be carried out by a qualified electrician, as they are familiar with the pertinent regulations and the specific requirements of the electric utility company.

If converting the tumble dryer to an alternative voltage, observe the instructions in the wiring diagram.
Conversion must be performed by Miele Service or by an authorised Miele Service dealer.

The tumble dryer must not be connected to devices such as timers which would switch it off automatically.

Single phase AC 230 V – country variant 230V 25A

This device is intended for connection to a power supply system where the maximum value of external phase neutral loop impedance Zmax of 0.38 Ohms at the point of distributor supply connection is not exceeded.

The user has to ensure that this device is connected only to a power supply system which fulfils the requirement above. If in doubt, please ask your electrical distributor for actual impedance value.

General principles concerning exhaust air management

⚠ Damage caused by incorrectly installed or missing ducting.
Moist air from the tumble dryer can cause damage in the room where the appliance is installed.
Please observe the instructions in “Installation of the ducting”.

⚠ Inconveniences (odours) or damage (moisture) caused by improper installation of the ducting opening.
The air from the tumble dryer can result in inconveniences or damage.
Install the opening to the ducting far away from windows, doors or other openings.

While installing the ducting, keep the tumble dryer disconnected from the mains power supply.

Try to keep the ducting as short as possible and try to avoid too many tight bends or elbows. This will help to stop a reduced dryer performance with long programme times and excessive time and energy consumption.

Tip: Use any parts marked with a * (extra accessories):

- **Ducting with a minimum diameter of 100 mm**
  e.g. exhaust hose* (made from plastic or aluminium) or a plastic waste water pipe (HT piping systems)
- **Opening to the ducting**
  e.g. wall pipe* or window connection*

General principles concerning the air supply

The air drawn into the appliance for the drying process is extracted from the ambient air. You must therefore ensure that the room is sufficiently ventilated.

⚠ Risk of suffocation due to the use of fireplaces or other technical equipment in the area of influence in the installation room.
The tumble dryer extracts the air it needs to dry items from the ambient air. This could result in exhaust gases from fireplaces or technical equipment being drawn back into the appliance.
When drying, always apply measures to ensure sufficient room ventilation in accordance with these operating instructions.

Measures for sufficient room ventilation

- Open any windows wide
- Install a window contact switch: the tumble dryer's electrical connection only switches when a window is open
- Install a vent that cannot be closed in the outer wall: approx. 237 cm^2

Calculating the total ducting length

The entire ducting system (including bends and components) generates air resistance that pushes against the exhaust air. The relative pipe lengths and total ducting length have to be calculated for this reason:

- The Ⓐ **relative pipe length** (table I) indicates how much greater the air resistance of a bend is, for example, when compared to 1 metre of a straight plastic waste water pipe.
- Adding all of these relative pipe lengths together gives the Ⓑ **total ducting length**. This is not the actual length but a calculated figure. The total ducting length (table II) expresses the air resistance of the entire exhaust air system.

Because a larger Ⓒ **pipe diameter** (table II) reduces the air resistance, a longer total duct length requires a greater pipe diameter.

Procedure

❶ Measure the length needed for the straight sections of ducting. Multiply the length by the corresponding relative pipe length from **table I**.

❷ Calculate the number of bends and elbows needed. Use **table I** to help you add together their relative pipe lengths.

❸ Calculate the total duct length: add together all of the relative pipe lengths calculated under ❶ and ❷.

❹ Refer to **table II** for the pipe diameter needed for the total duct length.

Table I

Components	Ⓐ Relative pipe length
Exhaust air hose (highly flexible)*	
1 m, laid straight	1.8 m
45° bend (radius of bend = 0.25 m)	1.5 m
90° bend (radius of bend = 0.25 m)	2.5 m
Exhaust air hose (flexible or flexible aluminium)*/plastic waste water pipe	
1 m, laid straight/straight pipe	1.0 m
45° bend (radius of bend = 0.25 m)	0.6 m
90° bend (radius of bend = 0.25 m)	0.8 m
Wall pipe* or window connection*	
With inserted grille	3.8 m
With non-return flap (swinging flap)	1.5 m
Non-return flap* for integration into the ducting (see “Shared exhaust air duct”)	14.3 m
Flat ducting (for stacked installation)*	11.0 m

* Optional accessories

Table II

Ⓑ Total duct length	Ⓒ Pipe diameter
Maximum of 20 m	100 mm
Maximum of 40 m	125 mm
Maximum of 80 m	150 mm

Sample calculation

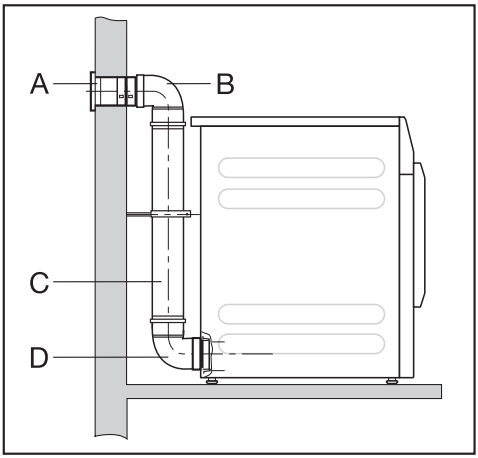

A	**Wall pipe, with inserted grille**	
	= 1 x 3.8 m relative pipe length	= 3.8 m
B/D	**2 bends, 90° plastic waste water pipe**	
	= 2 x 0.8 m relative pipe length	= 1.6 m
C	**0.5 m plastic waste water pipe**	
	= 0.5 x 1 m relative pipe length	= 0.5 m
	Total duct length	= 5.9 m

Because the total duct length is less than 20 m (according to table II), a pipe diameter of 100 mm will be sufficient.

Exhaust air outlets on the back of the tumble dryer

Sealing the air outlets

The ducting is installed on the right- or left-hand side of the tumble dryer's back panel. You must seal the unused connection with a cap.

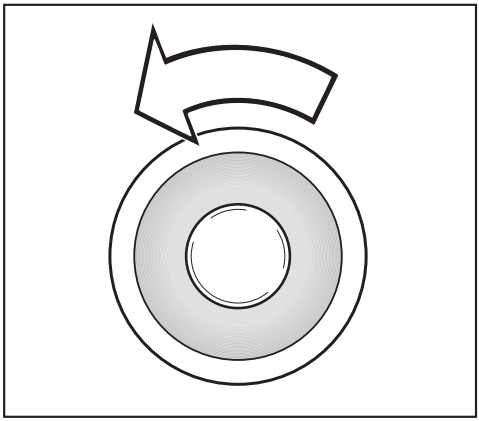

- Turn the cap to the left to remove it.
- Press the cap firmly into the open air outlet.

Dimensions of the exhaust air outlets

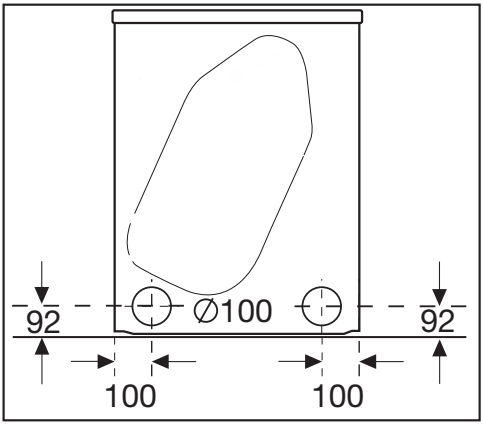

All measurements are in mm.

The distances between the machine and the wall are recommendations to help make it easier to carry out service work. If installation space is limited, the machine can also be pushed up against the wall.

Installing plug-in pipes

The tumble dryer is supplied with a connector for installing a pipe. It can be beneficial to use plug-in pipes if the total duct length is long. A pipe generates less resistance against the exhaust air than a highly flexible exhaust air hose, for example. This has a positive effect on the time and energy needed for drying.

You will need

- The connector provided
- A wall pipe* or a window connection* (*optional accessory)
- A plastic waste water pipe from a specialist retailer. If the required pipe diameter is over 100 mm, additional adapter pipes are needed for the pipe system (e.g. from 100 mm to 125 mm).

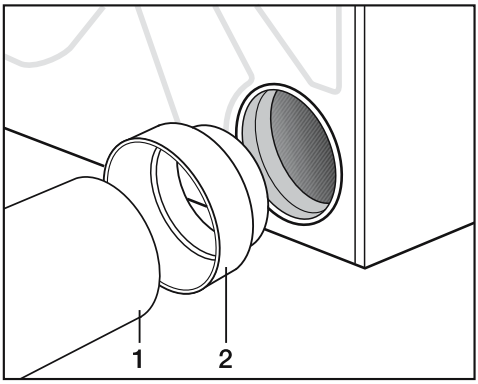

■ Insert the connector (2) into the exhaust air outlet.

■ Install the pipe (1).

Example

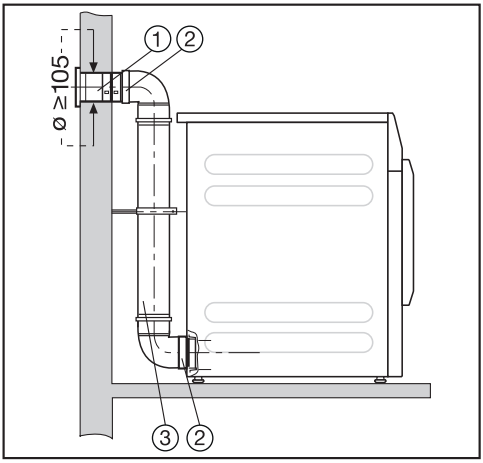

① Wall pipe (installation instructions are provided with the Miele wall pipe)

② Connector

③ Plastic waste water pipe, diameter DN 100

Installing flexible hoses

You can install an exhaust air hose with the help of an adapter* or flat ducting*.

You will need

- An exhaust air hose* (highly flexible, flexible or flexible aluminium)
- An adapter or flat ducting* (for a flexible exhaust air hose)
- A wall pipe* or window connection*

* (Optional accessories)

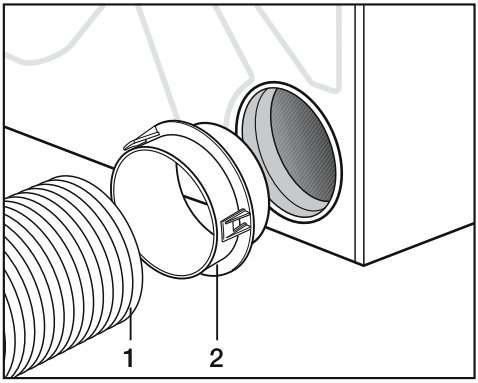

- Insert the adapter* (2) into the exhaust air outlet.
- Install the exhaust air hose (1).

Flat ducting

Use the flat ducting* to install the exhaust air hose* onto the tumble dryer if there is no space to install it to the back.

- Position the flat ducting* at a slight angle as far as it will go.
- Rotate the flat ducting* downwards until it engages.

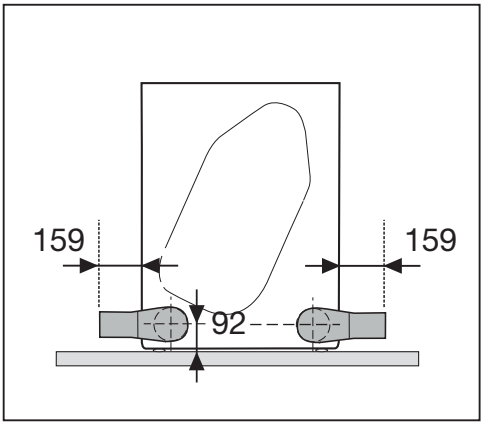

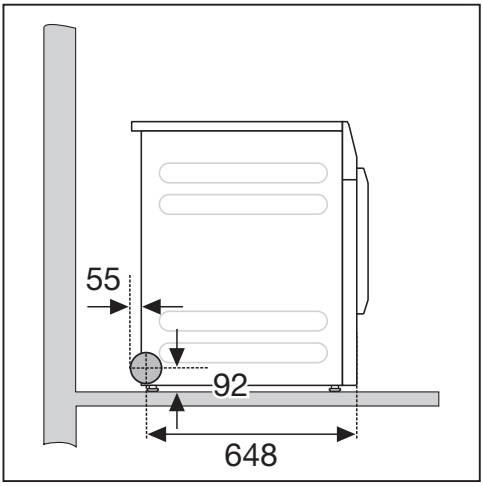

Examples

Connection to a ventilation stack

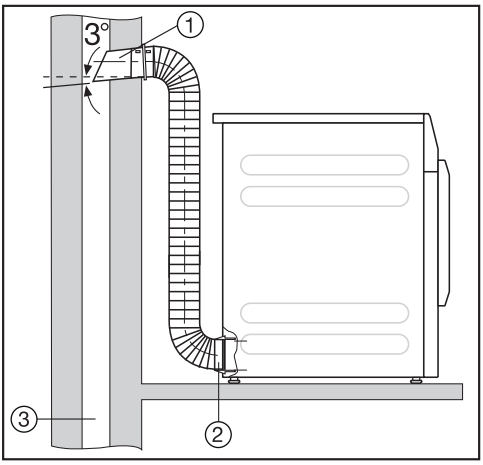

① Pipe with connector
(= individual parts in the Miele wall pipe)

② Adapter for a flexible exhaust air hose

③ Ventilation stack, moisture-proof

⚠ Risk of toxic fumes due to the intake of poisonous exhaust gas.

The tumble dryer extracts air for drying from the room where the appliance is installed. If the appliance is operated at the same time as fireplaces or other technical equipment in the area of influence in the installation room, toxic exhaust gases can be sucked back in.

Exhaust air must not be vented into a chimney or vent flue which is otherwise in use and must not be channelled into ducting which ventilates rooms with fireplaces.

Window connection

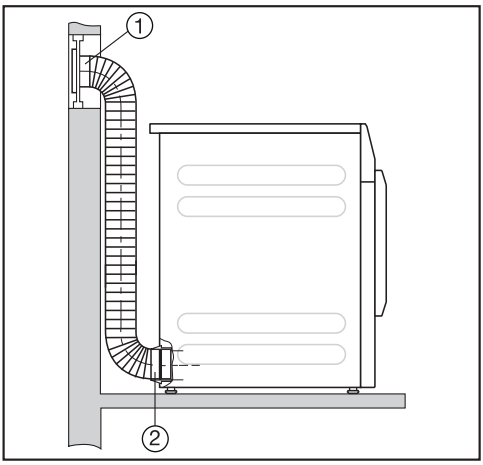

① Window connection (inserted in a pane of Perspex)

② Adapter for a flexible exhaust air hose

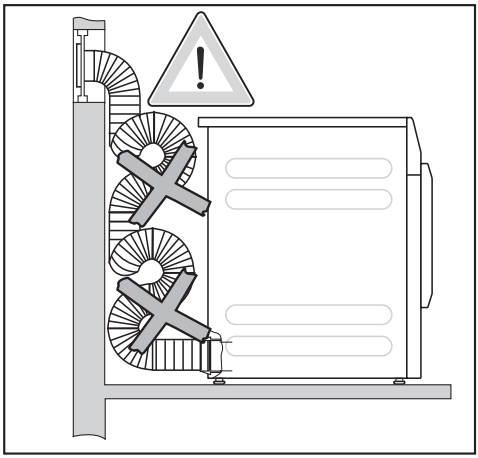

Condensation may run into the tumble dryer.

Do not lay the exhaust air hose in loops. Cut the exhaust air hose to the required length.

13 A variant (See data plate on back of machine)	Load size[1]	Final spin speed in washing machine	Residual moisture	Energy	Duration
	kg	rpm	%	kWh	min
Cottons Eco	7.0	1000	60	4.27	95
Normal[2]	3.5	1000	60	2.50	56
Cottons Normal	7.0	1200	53	3.80	86
	7.0	1400	50	3.65	82
	7.0	1550	48	3.50	79
	7.0	1600	44	3.25	73
Cottons Hand iron	7.0	1000	60	4.04	76
	7.0	1200	53	3.55	66
	7.0	1400	50	3.30	62
	7.0	1600	44	2.80	53
Minimum iron Normal	4.0	1.200	40	1.65	40
Automatic plus Normal	5.0	800	50	3.05	75
Shirts Normal	2.0	600	60	1.60	35
Denim Normal	3.5	900	60	3.20	90
Woollens	2.0	1000	50	0.24	5
Smoothing	1.0	1000	50	0.24	5
Express Normal	4.0	1000	60	2.90	65

[1] Weight of dry laundry

[2] Test programme in accordance with Regulation 392/2012/EU for energy labelling, measured in accordance with EN 61121.

All data was calculated using EN 61121 unless otherwise stated.

Consumption data can vary from the nominal values given above depending on the size of the load, types of textiles, residual moisture levels after spinning and fluctuations in the electricity supply, or when water hardness levels and extra options differ from specified values.

Consumption data

25 A variant (See data plate on back of machine)	Load size[1]	Final spin speed in washing machine	Residual moisture	Energy	Duration
	kg	rpm	%	kWh	min
Cottons Eco	7.0	1000	60	4.38	58
Normal[2]	3.5	1000	60	2.63	36
Cottons Normal	7.0	1200	53	3.95	53
	7.0	1400	50	3.75	50
	7.0	1550	48	3.60	48
	7.0	1600	44	3.30	45
Cottons Hand iron	7.0	1000	60	3.39	43
	7.0	1200	53	2.95	38
	7.0	1400	50	2.75	35
	7.0	1600	44	2.35	30
Minimum iron Normal	4.0	1.200	40	1.72	28
Automatic plus Normal	5.0	800	50	3.15	45
Shirts Normal	2.0	600	60	1.65	25
Denim Normal	3.5	900	60	3.30	54
Woollens	2.0	1000	50	0.25	5
Smoothing	1.0	1000	50	0.25	5
Express Normal	4.0	1000	60	2.95	38

[1] Weight of dry laundry

[2] Test programme in accordance with Regulation 392/2012/EU for energy labelling, measured in accordance with EN 61121.

All data was calculated using EN 61121 unless otherwise stated.

Consumption data can vary from the nominal values given above depending on the size of the load, types of textiles, residual moisture levels after spinning and fluctuations in the electricity supply, or when water hardness levels and extra options differ from specified values.

Height	850 mm
Width	596 mm
Width (only for machines with a stainless steel lid)	605 mm
Depth	717 mm
Depth with door open	1131 mm
Weight	52 kg
Drum volume	130 l
Load size	7 kg (weight of dry laundry)
Length of connection cable	2000 mm
Supply voltage	See data plate on back of machine
Rated load	See data plate on back of machine
Fuse rating	See data plate on back of machine
Test certifications awarded	See data plate on back of machine
LEDs	Class 1
Max. floor load during operation	670 N
Product safety standard	EN 50570, EN 60335
A-rated sound emissions L_{pA} in accordance with EN ISO 11204/11203	< 70 dB re 20 µPa

Frequency band	2.4000 GHz – 2.4835 GHz
Maximum transmission power	< 100 mW

Data sheet for household tumble driers

In acc. with delegated regulation (EU) No. 392/2012

MIELE	
Model name/identifier	PDR507EL (13 A)
Rated capacity[1]	7.0 kg
Type of tumble drier (Air-vented / condenser)	● / -
Energy efficiency class	
A+++ (most efficient) to D (least efficient)	C
Weighted annual energy consumption (AE_c)[2]	524 kWh/year
Tumble drier (Automatic / non-automatic)	● / -
Energy consumption of the standard cotton programme	
Energy consumption at full load	4.27 kWh
Energy consumption at partial load	2.50 kWh
Weighted power consumption in off-mode (P_o)	0.30 W
Weighted power consumption in the left-on mode (P_l)	0.30 W
Duration of the 'left-on' mode (T_l)[3]	15 min
Standard programme to which the information in the label and the fiche relates[4]	Cottons with arrow
Programme time of the 'standard cotton programme'	
Weighted programme time	73 min
Programme time at full load	95 min
Programme time at partial load	56 min
Condensation efficiency class[5]	
A (most efficient) to G (least efficient)	
Weighted condensation efficiency for the 'standard cotton programme' at full and partial load	%
Average condensation efficiency of the 'standard cotton programme' at full load	%
Average condensation efficiency of the 'standard cotton programme' at partial load	%
Sound power level (L_{WA})[6]	66 dB(A) re 1 pW
Built-in	-

● Yes, standard feature

[1] In kg of cotton laundry for the standard cotton programme at full load.

[2] based on 160 drying cycles of the standard cotton programme at full and partial load, and the consumption of the low-power modes. Actual energy consumption per cycle will depend on how the appliance is used.

[3] If the household tumble drier is equipped with a power management system.

[4] This programme is suitable for drying normal wet cotton laundry and is the most efficient programme in terms of energy consumption for cotton.

[5] If the household tumble drier is a condenser tumble drier.

[6] For the standard cotton programme at full load.

Data sheet for household tumble driers

In acc. with delegated regulation (EU) No. 392/2012

MIELE	
Model name/identifier	PDR507EL (25 A)
Rated capacity[1]	7.0 kg
Type of tumble drier (Air-vented / condenser)	● / -
Energy efficiency class	
A+++ (most efficient) to D (least efficient)	C
Weighted annual energy consumption (AE_c)[2]	543 kWh/year
Tumble drier (Automatic / non-automatic)	● / -
Energy consumption of the standard cotton programme	
Energy consumption at full load	4.38 kWh
Energy consumption at partial load	2.63 kWh
Weighted power consumption in off-mode (P_o)	0.30 W
Weighted power consumption in the left-on mode (P_l)	0.30 W
Duration of the 'left-on' mode (T_l)[3]	15 min
Standard programme to which the information in the label and the fiche relates[4]	Cottons with arrow
Programme time of the 'standard cotton programme'	
Weighted programme time	45 min
Programme time at full load	58 min
Programme time at partial load	36 min
Condensation efficiency class[5]	
A (most efficient) to G (least efficient)	
Weighted condensation efficiency for the 'standard cotton programme' at full and partial load	%
Average condensation efficiency of the 'standard cotton programme' at full load	%
Average condensation efficiency of the 'standard cotton programme' at partial load	%
Sound power level (L_{WA})[6]	66 dB(A) re 1 pW
Built-in	-

● Yes, standard feature

[1] In kg of cotton laundry for the standard cotton programme at full load.

[2] based on 160 drying cycles of the standard cotton programme at full and partial load, and the consumption of the low-power modes. Actual energy consumption per cycle will depend on how the appliance is used.

[3] If the household tumble drier is equipped with a power management system.

[4] This programme is suitable for drying normal wet cotton laundry and is the most efficient programme in terms of energy consumption for cotton.

[5] If the household tumble drier is a condenser tumble drier.

[6] For the standard cotton programme at full load.

EU Conformity declaration

Miele hereby declares that this vented dryer complies with Directive 2014/53/EU.

The complete text of the EU declaration of conformity is available from one of the following internet addresses:

- Products, Download from www.miele.co.uk
- For service, information, operating instructions etc: go to www.miele.co.uk/domestic/customer-information-385.htm and enter the name of the product or the serial number

UK Conformity declaration

Miele hereby declares that this vented dryer complies with UK Radio Equipment Regulations 2017, as amended.

The complete text of the UK declaration of conformity is available from one of the following internet addresses:

- Products, Download from www.miele.co.uk
- For service, information, operating instructions etc: go to www.miele.co.uk and enter the name of the product or the serial number

Opening Supervisor level

The settings menu in the Supervisor level is locked against unauthorised access. The menu can be unlocked with a code.

Access via code

The supervisor level is accessed using a code.

Factory default: the code is **000**.

Change code

You can alter the supervisor level access code to protect the tumble dryer from unauthorised access.

Carefully enter a new code.
Please inform Miele Service if you have forgotten your new code. Miele Service will have to reset the code.
Make a note of your new code and store it in a safe place.

Demo programme

In showrooms, a demo programme can be started with a simulation.

The programme does not start. The operational sequence is simply a simulation.

Tip: The demo programme will only be available if a drying programme lasting more than 1 hour has not been carried out. After this, the demo programme will not be available.

- Factory default: Off
- On

Supervisor level

Opening the supervisor level

■ Touch the ⚙🔒 sensor control.

The ⚙🔒 symbol appears in the display if you turn the programme selector to a programme.

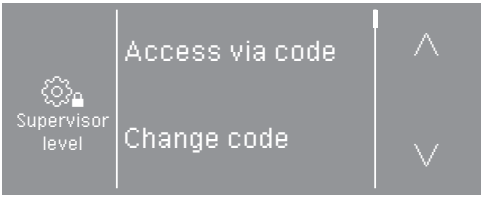

The following options are available for selection: Access via code, Change code, Demo programme.

■ Select Access via code.

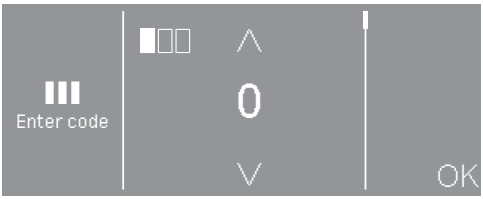

■ Enter the individual numbers and confirm each selection with OK.

The supervisor level settings are opened.

■ Select the desired setting.

Exiting the supervisor level

■ Touch the ⮌ sensor control or switch off the tumble dryer.

Language

The display can be set to appear in one of several different languages. To select the language you want, go to the *Languages* sub-menu.

You can change the language as follows:

- Permanently using the supervisor level (= “Supervisor language”).
- For the duration of the current programme only using the sensor control. The supervisor language is displayed again at the end of the programme.

Brightness

The brightness of the display can be set in intervals of ten from 10 % to 100 %.

Factory default: 70 %

Clock display

After selecting the clock format, you can set the time of day.

Clock format

- Factory default: 24-hour display
- 12-hour display
- Clock off

Set

- The time can be set.

Finish tone volume

The volume can be changed for the audible signal that sounds at the end of the programme.

It can be set to one of 7 different levels or switched off altogether.

Factory default: Off

Keypad tone volume

An audible signal can also be activated that sounds when the sensor controls are pressed; the volume of this signal can be adjusted.

It can be set to one of 7 different levels or switched off altogether.

Factory default: normal

Welcome tone volume

The volume of the switch-on signal tone can be changed.

It can be set to one of 7 different levels or switched off altogether.

Factory default: Off

Fault alarm

The audible signal that indicates an error can be switched off.

- Factory default: On
- Off

Memory

The tumble dryer saves the settings that were last selected for a drying programme (drying stage and/or extra option, or the duration for some programmes).

- Factory default: Off
- On

Anti-crease

At the end of the programme, the drum will continue to rotate at intervals if the laundry is not removed immediately.

Changing this setting leads to increased energy consumption.

The setting (⏲) can be switched off or a time between 1 and 12 hours can be selected.

Factory default: Off

Further cooling

Before the end of the programme, the temperature of the dried laundry is monitored and the cooling phase at the end of the programme is extended if necessary.

Changing this setting leads to increased energy consumption.

- Factory default: Off
- On

Cooling down temperature

The laundry will be cooled down automatically before the end of the programme. The automatic cooling-down phase which takes place before the end of a programme can be set at a cooler level for all programmes. This means that the cooling phase is extended.

Changing this setting leads to increased energy consumption.

The setting can be changed from 40 °C–55 °C.

Factory default: 55 °C

“Display” switch-off status

To save energy, the display goes out and the *Start*/*Stop* button flashes slowly.

Changing this setting leads to increased energy consumption.

- On after 10 min, not in current programme (factory default)
  The display will remain on during the programme sequence but will go out 10 minutes after the end of the programme.
- On after 10 min
  The display will go out after 10 minutes.

Delay start

The type of time input for the delay start function can be changed or switched off.

- Off
  The delay start function is not available for selection.
- End of programme (factory default)
  With the delay start function, you specify at what time the programme should end.
- Beginning of programme
  With the delay start function, you specify at what time the programme should begin.
- Time until start
  With the delay start function, you specify after how many hours a programme should begin.

SmartStart

The function of the ◇ sensor control changes when the *SmartGrid* setting is activated and the *Time until start* option is selected in the *Delay start* setting. The period of time in which the drying programme will start automatically is then shown in the display: *SmartStart*

The programme is started via an external signal.

The time period can be defined up to 24 hours. During this period, the tumble dryer waits for the external signal. If no signal is sent during the defined period, the tumble dryer starts the drying programme once the defined period of time has elapsed.

Programme name

When selecting a standard programme, the name of the selected drying is shown in the display.

- Factory default: on
  When a programme is selected, the programme name is displayed for a few seconds before the display shows the main menu.
- Off
  The main menu is displayed immediately.

Visibility parameters

Various parameters are offered/displayed when a programme is selected. You can decide which parameters should not be displayed. These parameters can then not be edited during programme selection.

- Residual moisture
- Duration
- Low temperature

Drying levels Cottons

Drying level Minimum iron

Drying level Automatic plus

You can alter the drying levels for the *Cottons, Minimum iron and Automatic plus* programmes.

Changing this setting leads to increased energy consumption.

It can be set to one of 7 different levels.

Factory default: normal

Drying level Machine iron

The *Machine iron* drying level in the *Cottons* programme can be individually adapted.

Changing this setting leads to increased energy consumption.

You can change the residual moisture in this programme to one of 11 levels from 16 % (more dry) to 26 % (more moist).

Factory default: 20 %

Clean the airways

The tumble dryer's electronics calculate the degree at which fluff or detergent residue in the fluff filters and air ducts are impairing performance. A message to check the contamination appears. You can decide at what level of fluff this reminder should be emitted.

You can adjust this reminder: Clean out airways

- Off
  The reminder does not appear. However, if there is a very severe blockage in the ducting, the programme will be cancelled and the reminder will appear in the display regardless of this option.
- Heavy
  The reminder only appears when there is a heavy build-up of fluff.
- Factory default: normal
- Sensitive
  The reminder appears when there is only a small build-up of fluff.

Clean the filters

The fluff filter in the air duct area must be cleaned on a regular basis. You can set an hourly interval for the reminder.

The selected hourly interval depends on how much fluff tends to build up and how often you wish to clean the filter, e.g. for hygiene purposes.

You can adjust this reminder: Clean the filters

- Time interval of 5–55 hours
- Factory default: after 55 hours
- Off

Programme packages

The tumble dryer's additional scope of programmes can be configured. The programmes are listed under “Programme chart”.

You can select various programmes packages.
The programmes selected from the programme packages are displayed under ☆ *Special programmes*.

- **Sport**
  - Sportswear
  - Outerwear
  - Proofing
- **Home textiles**
  - Down bedding
  - Synthetic bedding
  - Large items
- **Hygiene**
  - Cottons hygiene
  - Minimum iron hygiene
  - Timed drying warm air, hygiene

COM mod. selection

This tumble dryer is equipped with an integrated WiFi module. However, the dryer can also be equipped with an external module.

- Off
- Internal module (factory default)
  The internal WiFi module is used.
- External module
  An XKM module or RS232 module is inserted into the module slot.

Availability of Miele digital products

The ability of Miele digital products depends on the availability of the services in your country.

The different services are not available in all countries.

For information about availability, please visit www.miele.com.

WiFi / LAN

Control the networking of your tumble dryer.

- Setup
  This message only appears if the tumble dryer has not yet been connected to a WiFi network.
- Deactivate (visible when the network is activated)
  The network remains set up; the WiFi function is switched off.
- Activate (visible when the network is deactivated)
  The WiFi function is reactivated.
- Connection status (visible when the network is activated)
  The following values are displayed:
  – The quality of WiFi reception
  – The network name
  – The IP address
- Reset (visible when set up)
  Resets the WiFi login (network) to immediately re-establish a new connection.
- Reset (visible if already set up)

  The network is no longer set up. A new connection has to be established in order to use the network again.
  – The WiFi is switched off
  – The WiFi connection will be reset to the factory default setting

WiFi setup

There are 2 possible connection methods.

WPS

■ Activate the WPS function on your router within 2 minutes.

Tip: If the connection has not been set up when the timeout has finished counting down, repeat the process.

Soft AP

■ Activate the function with the Miele app on your smart device within 10 minutes.

Tip: The app will guide you through the remaining steps.

Network time

The date and time can be synchronised over the network.

- Off

  The date and time are not synchronised over the network.

- As master

  The machines are in a network but are not connected to the Internet. A machine is declared as the master and sends data to the *slave* devices.

- As slave

  The machines are in a network and are connected to the Internet. All machines are configured as *slaves*. Data is synchronised over the Internet.

External exhaust flap

External hardware is connected via the Miele XCI box.

The time delay between the external exhaust air flap's activation point and the switch-on time for the drum/fan motor is regulated.

A message appears in the display while the exhaust air flap is open.

- Factory default: Off

  This option must always be selected if there is no exhaust air flap to activate. This prevents the programme from being cancelled.

- On

  - 0 seconds
  - 1 second
  - 2 seconds

  ...

  - 300 seconds

Additional fan

External hardware is connected via the Miele XCI box.

If an extra fan is connected, it must be switched on at the same time as the drive unit.

- Off
- On

Pressure sensor

External hardware is connected via the Miele XCI box.

When using a shared exhaust air duct, one tumble dryer may have to be switched off or suppressed from the outset if certain pressure levels have built up in the ducting. Because the pressure sensor is an external unit, there is the option of reading in both a logical normally open contact or a normally closed contact.

A message appears in the display while the exhaust air flap is open.

- Off = Not active
- NO contact = Active
  Responds to **high potential**
- NC contact = Active
  Responds to **low potential**

Remote

Operating data relating to the tumble dryer (e.g. fault messages or notifications) is communicated externally.

Factory default: Off

Remote update

The RemoteUpdate function is used for updating the software in your tumble dryer.

Factory default: on

If you do not install a RemoteUpdate, you can continue to use your tumble dryer in the usual way. However, Miele recommends installing remote updates.

Activation

The RemoteUpdate menu option is only displayed and can only be selected if you have added your tumble dryer to your WiFi network.

Miele's RemoteUpdate function can only be used if the tumble dryer is connected to a WiFi network and you have an account in the Miele Professional app. The tumble dryer must be registered in the app.

See the Miele Professional app for terms and conditions of use.

Some software updates can only be carried out by Miele Service.

Running a RemoteUpdate

If a RemoteUpdate is available for your washing machine, it will be displayed automatically when the Operator level is open.

You can choose to start the RemoteUpdate immediately or wait until later. If you select "Start later", the prompt to run the RemoteUpdate will be displayed again the next time you switch on your washing machine.

The RemoteUpdate can take a few minutes.

Please note the following information about the RemoteUpdate function:

- You will only receive a message when a RemoteUpdate is available.
- Once a RemoteUpdate has been installed, it cannot be undone.
- Do not switch off the tumble dryer during a RemoteUpdate. Otherwise, the RemoteUpdate will be aborted and will not be installed.

SmartGrid

The SmartGrid setting is only visible if a network has been set up and activated. You can use this function to integrate your tumble dryer into building energy management systems.

Legal information

Open source licences

You can view information here.

Copyrights and licences for operator and control software

Miele uses their own and third party software which is not subject to any so-called Open Source Licence for the operation and control of the appliance. This software/these software components are protected by copyright. The copyright powers of Miele and third parties have to be respected.

Furthermore, this appliance contains software components which are distributed under Open Source licence conditions. Please refer to the menu item Settings | Appliance parameters | Legal information | Open source licences in the appliance for the Open Source components contained therein, together with the corresponding copyright notices, copies of the licencing conditions valid at the time, and any further information. The liability and warranty provisions of the Open Source licence terms and conditions as stated therein apply only in relation to the respective rights holders.

Payment system

The XCI-AD or XCI box accessory unit is required to connect a payment system.

Setting for payment systems

If you wish to change the settings after the commissioning process, please contact Miele Service.

You would like to connect a payment system.

- No payment system

  The following settings are skipped and initial commissioning can be completed.

- Programme operation

  The machine is operated using a coin box. The user purchases a programme.

- Timed operation

  The tumble dryer is coin-operated using a time meter. The user purchases a time-controlled programme.

- Timed operation with pulse counter

  For payment systems where the usage time is increased each time a coin is inserted.

- COM module

  The machine is operated by a central control unit

External prog. lock

The control unit has an option to block programmes. Programmes are blocked by an external system via the COM interface. A programme can be blocked based on the available time or the available account balance, or generally.

- Factory default: Off
- On

Feedback signal to pay system

Setting the feedback signal for the coin box.

- Factory default: Off
- End of programme

  The feedback signal is sent at the end of the programme.

- Release of the start button

  The feedback signal is sent when the start button is released.

- Start and end of programme

  The feedback signal is sent at the start and end of the programme.

- Programme running

  The feedback signal is sent constantly between the start and end of the programme.

- Process air temperature

  The feedback signal is sent dependent on the temperature if the temperature of the process air is equal to or higher than the set temperature.

Payment system lock

To avoid tampering, a programme lock can be set up in programme operation. If the lock is applied, the programme is interrupted and payment credit is lost as soon as the door is opened.

The time for the lock to be applied can be adjusted to enable laundry to be added.

- Factory default: off
- As soon as the programme starts
- 1–5 minutes after the start of the programme

Delete paid signal

The “Paid” signal in coin box mode can be applied until the end of the programme or discarded if the programme is not started after 5 minutes.

- Factory default: Off
- On

Debounce time

In coin mode, the debounce time for the minimum payment signal that must be applied can be adjusted.

- Factory setting: Short

  For coin boxes where the falling coin generates the paid pulse.
- Long

  For central control units on a 230 V basis.

Payment system overriding time

Setting the transition signal for the coin box. Security time margin to prevent the coin box being tampered with.

The transition time can be adjusted in 15-minute increments between 30–240 minutes or switched off.

If the programme does not end within the transition period, the setting in the coin box is reset. The programme is cancelled.

Factory default: 180 minutes

Duration Cool air

The running time can be adjusted.

A time of between 10 and 120 minutes can be set in 5-minute increments.

Factory default: 120 minutes

Duration Warm air

The running time can be adjusted.

A time of between 20 and 120 minutes can be set in 5-minute increments.

Factory default: 60 minutes

FOC programmes

In coin mode, you can decide whether the *Timed drying cool air* programme can be used for free.

- Factory default: Off
- On

United Kingdom
Miele Co. Ltd., Fairacres, Marcham Road
Abingdon, Oxon, OX14 1TW
Professional Sales, Tel: 0845 365 6608
E-mail: professional@miele.co.uk
Internet: www.miele.co.uk/professional

Australia
Miele Australia Pty. Ltd.
ACN 005 635 398, ABN 96 005 635 398
1 Gilbert Park Drive, Knoxfield, VIC 3180
Tel: 1300 731 411
Internet: www.miele.com.au/professional
E-mail: sales@miele-professional.com.au

China Mainland
Miele Electrical Appliances Co., Ltd.
1-3 Floor, No. 82 Shi Men Yi Road
Jing' an District, 200040 Shanghai, PRC
Tel: +86 21 6157 3500, Fax: +86 21 6157 3511
E-mail: info@miele.cn, Internet: www.miele.cn

Hong Kong, China
Miele (Hong Kong) Ltd.
41/F - 4101, Manhattan Place
23 Wang Tai Road, Kowloon Bay, Hong Kong
Tel: (852) 2610 1025, Fax: (852) 3579 1404
Email: customerservices@miele.com.hk
Website: www.miele.hk

India
Miele India Pvt. Ltd.
1st Floor, Copia Corporate Suites,
Commercial Plot 9, Mathura Road, Jasola,
New Delhi - 110025
E-mail: customercare@miele.in, Website: www.miele.in

Ireland
Miele Ireland Ltd.
2024 Bianconi Ave., Citywest Business Campus, Dublin 24
Tel: (01) 461 07 10, Fax: (01) 461 07 97
E-Mail: info@miele.ie, Internet: www.miele.ie

Malaysia
Miele Sdn Bhd
Suite 12-2, Level 12
Menara Sapura Kencana Petroleum
Solaris Dutamas No. 1, Jalan Dutamas 1
50480 Kuala Lumpur, Malaysia
Phone: +603-6209-0288
Fax: +603-6205-3768

New Zealand
Miele New Zealand Limited
IRD 98 463 631
8 College Hill
Freemans Bay, Auckland 1011, NZ
Tel: 0800 464 353
Internet: www.miele.com.au/professional
E-mail: sales@miele-professional.com.au

Singapore
Miele Pte. Ltd.
29 Media Circle, #11-04 ALICE@Mediapolis
Singapore 138565
Tel: +65 6735 1191, Fax: +65 6735 1161
E-Mail: info@miele.com.sg
Internet: www.miele.sg

South Africa
Miele (Pty) Ltd
63 Peter Place, Bryanston 2194
P.O. Box 69434, Bryanston 2021
Tel: (011) 875 9000, Fax: (011) 875 9035
E-mail: info@miele.co.za
Internet: www.miele.co.za

United Arab Emirates
Miele Appliances Ltd.
Showroom 1, Eiffel 1 Building
Sheikh Zayed Road, Umm Al Sheif
P.O. Box 114782 - Dubai
Tel. +971 4 3044 999, Fax. +971 4 3418 852
800-MIELE (64353)
E-Mail: info@miele.ae, Website: www.miele.ae

Manufacturer: Miele & Cie. KG
Carl-Miele-Straße 29, 33332 Gütersloh, Germany

Miele

PDR 507 EL

en-GB

M.-Nr. 12 032 470 / 00