Miele

Operating and Installation Instructions
Wine Conditioning Unit

To prevent accidents and machine damage, you **must** read these instructions before installation or use.

en-US

M.-Nr. 12 794 540

Contents

IMPORTANT SAFETY INSTRUCTIONS **4**

Sustainability and environmental protection **12**
Caring for the environment 12
How to save energy 13

Overview **14**
Guide to the appliance 14
Display 15
Settings mode 16
Feature lighting 16
Lock function 16
Switching the wine refrigerator off 16
Sabbath mode 16
Information on Sabbath mode 16
Time before door alarm is triggered 16
Networking 16
Keypad tone 16
Alarms and audible signals 16
Display brightness 16
Temperature unit °C/°F 17
Demo mode 17
Factory defaults 17
Information on the wine refrigerator 17
Active AirClean filter display 17
Accessories supplied 17
Safety 18
Temperature alarm 18
Turning the temperature alarm off early 18
Door alarm 18
Networking 19
Adjusting the interior fittings 19
Removing and reinserting the wooden shelves 19
Adjusting the wooden shelf (FlexiFrame) to the bottle size 20
Maximum capacity 20
Labeling the labeling strip (NoteBoard) 21
Optional accessories 22

Commissioning **23**
Before using for the first time 23
Connecting the wine refrigerator 23
Activating the charcoal filter (Active AirClean filter) 23
Positioning the slats on the wooden shelves 23
Setting up the stacking aid 23
Switching the wine refrigerator on 24
Switching the wine refrigerator off 24
Switching off for longer periods of time 24
Setting up networking for the first time 24
Performing Scan & Connect 25

Operation **26**
Setting the temperature 26
Temperature range 26
Temperature display 26
Setting the humidity (ActiveHumidity) in the lower wine conditioning zone 26
Humidity range 27

Customizing settings **28**

Cleaning and care **33**
Cleaning agents 33
Preparing the wine refrigerator for cleaning 33
Cleaning the interior of the appliance 33
Replacing the Active AirClean filter 34
Cleaning the door seal 35

Cleaning the ventilation gaps 35
After cleaning 35
Automatic defrosting 35

Frequently asked questions **36**
Interior lighting 41
Causes of noises 42

Customer Service **44**
Contact in the event of a fault 44
Appliance warranty and product registration 44

Installation **45**
Installation site 45
Climate range 46
Ventilation 46
Side-by-side 46
Changing the door hinges 47
Ordering printed installation instructions 47
Custom door panel 47
– Gap 47
Weight of the door panel 48
Limiting the opening angle of the appliance door 48
Installation dimensions 50
Niche/side view 50
Connections and door panel dimensions 51
Installing the wine conditioning unit 52
To install the wine refrigerator, you will need the following tools: 52
Preparing the wine refrigerator .. 52
Pushing in the wine refrigerator . 53
Aligning the wine refrigerator 54
Aligning the wine refrigerator with taller cabinet doors 56
Securing the wine refrigerator in the niche 57
Installing the door panel 57
Electrical connection 60

Information **62**
Declaration of conformity 62
Copyrights and licenses 62

IMPORTANT SAFETY INSTRUCTIONS

This wine refrigerator complies with all current local and national safety requirements. Inappropriate use can, however, lead to personal injury and material damage.

Read the operating and installation instructions carefully before using the wine refrigerator. They contain important information on installation, safety, use, and maintenance. This is to protect yourself from injury, and from damaging your wine refrigerator.

In accordance with standard IEC 60335-1, Miele expressly and strongly advises that you read and follow the instructions in the chapter on installing the wine refrigerator, as well as the IMPORTANT SAFETY INSTRUCTIONS.

Miele cannot be held liable for injury or damage caused by non-compliance with these instructions.

Keep these operating and installation instructions in a safe place and pass them on to any future owner.

⚠ Risk of injury from broken glass.

If installed at altitudes above 4,900 ft (1,500 m), there is a risk of the glass in the appliance door breaking because of changes in air pressure.
Shards of glass can cause severe injury.

Appropriate use

▶ This wine conditioning unit is intended for use in domestic households and similar residential environments such as

- staff kitchen areas in shops, offices and other working environments
- farm houses and by clients in hotels, motels and other residential type environments
- bed and breakfast type environments
- catering and similar non-retail applications.

This wine conditioning is not intended for use outdoors, in damp environments or in places exposed to rain.

▶ The wine unit is intended exclusively for domestic use for storing wine.
The wine unit is not suitable for freezing food.
The wine unit is suitable for integrated under-counter installation.
Any other use is at the owner's risk and could be dangerous.

▶ The wine conditioning unit is not suitable for storing and keeping cool medicines, blood plasma, laboratory preparations or other such materials or products. Incorrect use of the wine conditioning unit for such purposes can cause deterioration of the items stored. The wine conditioning unit is not suitable for use in areas where there is a risk of explosion.
Miele cannot be held liable for damage resulting from improper or incorrect use of the appliance.

▶ This wine conditioning unit may only be used by people (including children) with reduced physical, sensory or mental capabilities or lack of experience and knowledge if they are supervised while using it.
The wine conditioning unit may only be used by these people without supervision if they have been shown how to use it in a safe way and recognize and understand the consequences of incorrect operation.

Safety with children

▶ Children must be kept away from the wine unit unless they are constantly supervised.

▶ Children may only use the wine unit without supervision if they have been shown how to use it in a safe manner. Children must be able to understand and recognize the possible dangers caused by incorrect operation.

▶ Children near the wine conditioning unit must be supervised. Do not let children play with the wine conditioning unit.

▶ Risk of suffocation. While playing, children may become entangled in packaging material (such as plastic wrapping) or pull the packaging material over their head, presenting the risk of suffocation. Keep packaging material away from children.

Technical safety

▶ The refrigerant circuit has been checked for leaks. The wine conditioning unit complies with statutory safety requirements.

▶ Warning: fire hazard/flammable materials. This symbol is on the compressor and indicates flammable materials. Do not remove this sticker.

The refrigerant inside the appliance (details on the data plate) is environmentally friendly but flammable.
The use of this refrigerant does, however, sometimes lead to a slight increase in the noise level of the appliance. In addition to the noise of the compressor, you might be able to hear the refrigerant flowing around the cooling circuit. Unfortunately, this cannot be avoided, but it does not affect the performance of the wine refrigerator.
When transporting and installing the wine refrigerator, ensure that no parts of the cooling circuit are damaged. Splashes of refrigerant can damage the eyes and leaking refrigerant can ignite.
In the event of damage:

- Avoid open flames or anything which creates a spark.
- Disconnect the wine refrigerator from the electricity supply.
- Ventilate the room where the wine refrigerator is located for several minutes.
- Contact Miele Service.

▶ The more refrigerant there is in a wine unit, the larger the room it should be installed in. In the event of a leakage, if the appliance is in a small room, there is the danger of a combustible gas/air mixture building up. For every 8 g of refrigerant, at least 1 m^3 of room space is required. The amount of refrigerant in the wine unit is stated on the data plate inside the appliance.

▶ To avoid the risk of damage to the wine conditioning unit, make sure that the connection data (fuse rating, frequency and voltage) on the data plate corresponds to the household supply.
Check that this is the case before connecting the wine conditioning unit. Consult a qualified electrician if in any doubt.

▶ The electrical safety of this wine refrigerator can only be guaranteed when correctly grounded. It is most important that this basic safety requirement is fulfilled.
If in doubt, the electrical installation should be checked by a qualified electrician.

▶ Temporary or permanent operation on an autonomous power supply system or a power supply system that is not synchronized with the grid power supply (e.g., island networks, back-up systems) is possible. A prerequisite for operation is that the power supply system complies with national and local codes.
The function and operation of the protective measures provided in the domestic electrical installation and in this Miele product must also be maintained in isolated operation or in operation that is not synchronized with the grid power supply, or these measures must be replaced by equivalent measures in the installation.

▶ The electrical outlet must not be concealed behind the wine conditioning unit and must be easily accessible so that the appliance can be quickly disconnected from the electrical supply in case of an emergency.

▶ If the power cord is damaged, it must only be replaced with a specific power cord of the same type (available from from Miele Service). For safety reasons, this replacement may only be carried out by a qualified specialist or Miele Service.

▶ The electrical outlet must be properly grounded.

▶ Do not connect the appliance to the electrical supply with a power bar or extension cord. These are a fire hazard and do not guarantee the required safety of the appliance.

▶ If moisture gets into electrical components or into the power cord, it could cause a short circuit. Therefore, do not operate the wine conditioning in areas where there may be moisture or splashing water (e.g., garages, laundry rooms).

▶ This wine conditioning unit must not be used in a non-stationary location (e.g. on a ship).

▶ Before installation and use check the wine conditioning unit for any visible damage. Do not operate or install a damaged appliance.

▶ To ensure safe operation, use the wine conditioning unit only when it has been installed.

▶ The wine conditioning unit must be disconnected from the power supply during installation, side-by-side heater installation, maintenance and repair work. The appliance is only disconnected from the power supply if:

- the circuit breaker has been tripped, or
- the power cord has been unplugged. Pull on the plug and not on the cord when removing it from the outlet.

▶ Unauthorized installation, maintenance, and repairs could result in unforeseen dangers for the user, for which the manufacturer cannot accept liability.
Installation, maintenance, and repairs should only be carried out by a qualified specialist or Miele Service.

▶ The manufacturer's warranty may be invalidated if the wine refrigerator is not repaired by a qualified specialist or by Miele Service.

▶ If defective safety-relevant components are replaced, full compliance with safety requirements may only be guaranteed if genuine Miele replacement parts are used.

▶ This wine refrigerator is supplied with a special bulb to cope with particular conditions (e.g., temperature, moisture, chemical resistance, abrasion resistance, and vibration). This bulb must only be used for the purpose for which it is intended. The bulb is not suitable for room lighting. Replacement bulbs should only be installed by a qualified specialist or by Miele Service. This wine refrigerator contains several light sources with at least energy efficiency class G.

Proper installation

▶ When installing the refrigeration appliance, it is a mandatory requirement to follow the installation instructions.

▶ Always wear protective gloves when transporting and installing the wine refrigerator.

▶ Two people are required to install the wine refrigerator.

▶ Change the door hinging (if necessary) as described in the installation instructions.

Correct use

▶ The wine conditioning unit is designed for use within a specific climate class (room temperature range). Do not use in a climate class for which it is not designed. A lower room temperature will cause the compressor to switch off for longer periods, meaning that the wine conditioning unit is unable to maintain the required temperature.

▶ The ventilation openings must never be obstructed. This can impair the proper ventilation of the appliance, increase the energy consumption and cause damage to the components.

▶ Risk of damage due to greasy or oily foods. If the wine refrigerator is used for storing food which contains fat or oil, make sure that it does not come into contact with plastic components. Any spillages of oil or fat could cause stress cracks to the plastic and cause it to break or split.

▶ Risk of fire and explosion due to flammable mixes of gases. Do not store explosive materials in the wine refrigerator or any products containing propellants (e.g., spray cans). Electrical components can cause flammable mixes of gases to ignite. The spray cans in question can be identified by the contents printed on the can or by a flame symbol. Electrical components can cause escaping gases to ignite.

▶ Risk of explosion. Do not operate any electrical appliances inside the wine conditioning unit. Risk of sparking and explosion.

Accessories and parts

▶ Miele assumes no liability for the use of accessories that are not genuine Miele accessories. Miele may not be liable for warranty, guarantee, and/or product liability claims if damage or defects are due to the use or installation of accessories that do not originate from Miele or have not been approved by Miele.

Cleaning and maintenance

▶ Do not use any oil or grease on the door seals.
They can cause the seals to deteriorate over time.

▶ Do not use a steam cleaning appliance to clean this wine conditioning unit.
The steam could reach electrical components and cause a short circuit.

▶ WARNING! DANGER of injury and damage! Do not use any mechanical tools or other types of aid which are not recommended by the manufacturer to accelerate the defrosting process.

▶ Sharp edged or pointed objects will damage the evaporator, causing irreversible damage to the wine conditioning unit. Do not use sharp edged or pointed objects to

- remove frost and ice,
- remove labels, stickers, etc.

Transport

▶ Always transport the wine conditioning unit in an upright position and in its original transport packaging to avoid damage in transit.

▶ Risk of injury and damage. The wine refrigerator is very heavy and must be transported by two people.

Disposal of your old appliance

▶ Children playing could become trapped in the wine refrigerator and could suffocate.

- Remove the appliance door.
- Leave the wooden/metal shelves in the wine refrigerator so children cannot climb inside.
- If the wine refrigerator has a door lock, make sure that children cannot lock themselves inside while playing as this could endanger their lives.

▶ Risk of electric shock!

- Cut the electrical plug off the power cord.
- Cut the power cord off the old appliance.

Dispose of the electrical plug and power cord separately from the old appliance.

▶ Ensure that the wine conditioning unit is not stored in the vicinity of gasoline or inflammable gases and liquids during and after disposal.

▶ Risk of fire due to escaping oil or refrigerant.
The refrigerant and oil inside the appliance are flammable. In high enough concentrations, escaping refrigerant or oil can ignite if they come into contact with an external heat source.
During disposal, make sure that the cooling circuit is not damaged. This prevents refrigerant and oil escaping in an uncontrolled manner (see the data plate for details of the refrigerant).

▶ Splashes of coolant can cause damage to the eyes. Be careful not to damage any part of the pipework while awaiting disposal, e.g. by

- puncturing the coolant channels in the evaporator,
- kinking any pipework,
- scratching the surface coating.

Symbol on the compressor (depending on model)

This information is only relevant for recycling. There is no risk during normal operation.

▶ The oil in the compressor can be fatal if swallowed or if it penetrates the airways.

Symbol on the rear of the appliance (depending on model)

This label or a similar one is only relevant for recycling. Do not remove the lable.

▶ The note refers to foam panels in the appliance door and/or housing.

Sustainability and environmental protection

Caring for the environment

Disposal of the packing material

The cardboard box and packing materials protect the appliance during shipping.

Ensure that any plastic wrappings, bags, etc. are disposed of safely and kept out of the reach of children. Danger of suffocation!

Disposing of your old appliance

Electrical and electronic appliances contain many valuable materials. They also contain certain materials, compounds, and components which were essential for their correct functioning and safety. These could be hazardous to your health and to the environment if disposed of with household waste or if handled incorrectly. Please do not, therefore, dispose of your old appliance with household waste.

Take care not to damage your refrigerator before or during disposal in an authorized, environmentally-friendly manner.
This is to ensure that refrigerant in the cooling circuit and oil in the compressor is contained, and will not leak into the environment.

Instead, please make use of officially designated collection and disposal locations to dispose of and recycle electrical and electronic appliances in your local community, with your dealer, or with Miele, free of charge. By law, you are solely responsible for deleting any personal data from the appliance prior to disposal. You are legally obliged to remove any old batteries which are not securely enclosed by the appliance and to remove any lamps without destroying them, where this is possible. These must be taken to a suitable collection point where they can be handed in free of charge. Please ensure that your old appliance poses no risk to children while being stored for disposal.

How to save energy ...

Installation site

The wine refrigerator has to cool more often at higher ambient temperatures and consumes more energy in the process. Therefore:

- Install the wine refrigerator in a well-ventilated room.
- Do not install the wine refrigerator near to a heat source (heater element, range).
- Protect the wine refrigerator from direct sunlight.
- Ensure an ideal ambient temperature of 68°F (20°C).
- Keep the ventilation openings clear and clean them on a regular basis to remove any dust.

Temperature setting

The colder the temperature, the higher the energy consumption. The following settings are recommended:

- 54 to 57°F (12 to 14°C).

Use

Energy consumption is increased by heat input and impeded air circulation. Therefore:

- Only open the appliance door when necessary and for as short a time as possible. Arrange the wine bottles in a way that makes them easy to find in the appliance.
- Always close the appliance door properly after opening it.
- Keep wooden shelves arranged as they were when the appliance was delivered.
- Do not overfill the wooden shelves to allow air to circulate.
- Keep the fan air ducts in the wine refrigerator clear.

Guide to the appliance

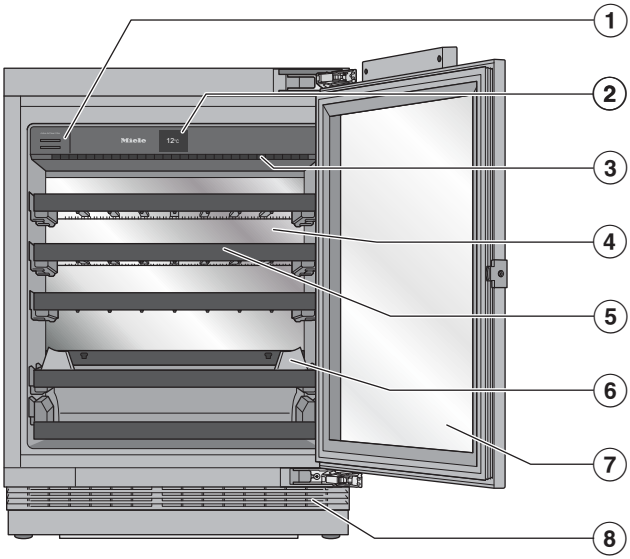

① Charcoal filter (Active AirClean filter)

② Display

③ Interior lighting and feature lighting :
Thanks to the use of LEDs, the wine will not be adversely affected by heat or UV light.

④ Dry back wall to prevent condensate

⑤ Wooden shelves with labeling strips (NoteBoards)

⑥ Stacking aid for optimized bottle storage

⑦ Glass door: The safety glass door with UV filter protects your wine from harmful UV rays.

⑧ Ventilation grille

Display

The display can be scratched by pointed or sharp objects, e.g., pens.
Only touch the display with your fingertips.
It is possible that the display will not react to finger contact if your fingers are cold.

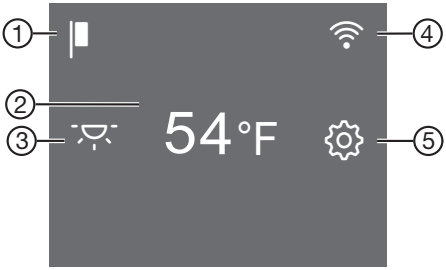

① Demo-mode display
(only visible when the Demo-mode function has been switched on)

② Temperature display sensor control for setting the temperature

③ Feature lighting sensor control
For switching the interior lighting on and off when the appliance door is closed

④ Display for connection status
(only visible if networking has been set up)

⑤ Settings mode sensor control
for adjusting various settings in Settings mode

Operating the wine refrigerator via the display

- Touch the area/symbol you want on the status display.
- Swipe left or right across the display until the value/symbol you want is shown in the middle.
- Tap the option you want on the display to confirm.

The selected value/symbol will light up orange (except for a few exceptions).

- To leave the Settings level, tap ⮌ or *OK*.

Settings mode

Feature lighting

The interior lighting can be set to remain on when the appliance door is closed so your wines can be on display at all times.

The feature lighting is switched on and off using the sensor control on the display. When the feature lighting is switched on, the sensor control lights up orange.

The feature lighting can be set at different brightness levels or switched off completely (see “Customizing settings”).

Lock function /

When the lock function is switched on, it protects the wine unit from being switched off or adjusted unintentionally by unauthorized persons, e.g., children.

If you just want to quickly adjust the temperature, for example, you can deactivate the lock function temporarily (see “Adjusting settings”).

Switching the wine refrigerator off

You can switch off the wine refrigerator here (see “Commissioning – Switching the wine refrigerator off”).

Sabbath mode

The wine refrigerator offers a Sabbath mode for the purposes of religious observance (see “Customizing settings”).

When Sabbath mode is switched on, the following are deactivated temporarily:

- the interior lighting when the appliance door is opened
- the feature lighting when the appliance door is closed
- the display
- all audible and visual signals
- an active Wi-Fi connection
- reminders (e.g., Active AirClean filter display): The set time interval is paused

All other functions switched on previously remain activated.

When Sabbath mode is switched on, you cannot adjust any settings on your wine refrigerator.

Information on Sabbath mode

You can call up the Sabbath mode version here.

Time before door alarm is triggered

You can set the time before the appliance door alarm is triggered here.

Networking

Here you can set up networking for the first time, deactivate and activate the Wi-Fi, or reset the network configuration (see “Adjusting settings”).

Keypad tone /

You can switch the keypad tone on or off here (see “Customizing settings”).

Alarms and audible signals /

You can change the volume of the alarms and audible signals (e.g., in the event of a door alarm or a fault message) here. Alternatively, you can switch the alarms and audible signals off completely if you find them annoying (see “Customizing settings”).

Display brightness

You can adjust the display brightness to the lighting conditions in the room here.

Temperature unit °C/°F

You can set the required temperature unit (°Celsius or °Fahrenheit) here.

Demo mode

You can switch off demo mode here if it has been switched on as a default setting (will appear on the display) (see “Customizing settings”).

Demo mode allows the wine refrigerator to be presented in the showroom without the cooling system being switched on. Do not activate this setting for domestic use.

Factory defaults

You can reset the wine refrigerator’s settings to their factory default settings here (see “Customizing settings”).

Tip: Reset the settings to the factory default settings when disposing of your wine refrigerator, selling it, or putting a used wine refrigerator into operation. This will reset the network configuration so that your personal data is deleted from the wine refrigerator. This will also ensure that a previous owner is no longer able to access the wine refrigerator.

Information on the wine refrigerator

You can call up the model number and serial number of your wine refrigerator here.

Keep this appliance data to hand; you will need it:

- for integrating the wine refrigerator into your Wi-Fi network (see “Customizing settings – Setting up Miele@home for the first time”)
- when reporting an appliance fault to Miele Service (see “Service”)
- when retrieving information from the EPREL database (see “Service”)

Active AirClean filter display

Filtering the air through the Active AirClean filter ensures that the air remains free from dust and odors.

The Active AirClean filter display will remind you approx. every 12 months that the Active AirClean filter has to be replaced (see “Cleaning and care – Replacing the Active AirClean filter (charcoal filter)”).

You can activate the Active AirClean filter display here (see “Customizing settings”).

Accessories supplied

Charcoal filter (Active AirClean filter)

The Active AirClean filter ensures optimum air exchange and therefore excellent air quality in the wine refrigerator.

Chalk pen

Use the chalk pen supplied to label the NoteBoards on the wooden shelves. By labeling the NoteBoards, you will have a good overview of the types of wine being stored.

Safety

Temperature alarm

The wine refrigerator is equipped with a temperature alarm so that the temperature cannot rise or fall unnoticed and therefore damage the wine.

If the temperature becomes too warm or too cold, will light up red in the temperature display.
An alarm will also sound until the cause of the alarm is rectified or the alarm is switched off.

The set temperature determines when the appliance recognizes a temperature as being too warm or too cold.

The audible and visual signals may be activated in the following situations:

- Too much warm ambient air enters the wine refrigerator when you are rearranging or taking out wine bottles.
- You are storing a large number of wine bottles.
- There was a power outage.
- There is a fault with the wine refrigerator.

Turning the temperature alarm off early

Before you switch the temperature alarm off, you must determine the cause and rectify it.

If the alarm disturbs you, it can be turned off early.

■ Tap .

will go out and the alarm will stop.

The warmest temperature recorded in the wine conditioning zone will flash for about 1 minute in the temperature display. Then the temperature display will change to the current temperature in the wine conditioning zone.

Door alarm

The wine refrigerator is fitted with a door alarm to avoid increased energy consumption if the door is left open and prevent the stored wine bottles being affected by temperature fluctuations.

If the appliance door is left open for a longer period of time, will light up yellow on the display. An alarm will also sound and the interior lighting will flash.

The amount of time before the door alarm is triggered can be changed (see “Customizing settings – Changing the time before the door alarm is triggered”).
The door alarm’s audible signal can also be switched off (see “Customizing settings – Changing the volume of the alarms and audible signals /”).

The alarm will stop and will go out on the display as soon as the door is closed.

Turning the door alarm off early

■ Tap .

The alarm will stop, will go out, and the interior lighting will light up constantly.

If the appliance door is not closed, the door alarm will sound again after a short time.

Networking

Your wine refrigerator is equipped with an integrated Wi-Fi module. The Wi-Fi module makes it possible to connect to your home network and to use the Miele app on a mobile device.

Once your wine refrigerator has been connected via Wi-Fi, the connection is automatically re-established every time it is switched on.

Make sure that your Wi-Fi network signal is strong enough in the place where you intend to install your wine refrigerator.

Connecting your wine refrigerator to your Wi-Fi network will increase energy consumption, even when the wine refrigerator is switched off.

Smart Extras via the Miele app*

Networking via the Miele app gives you access to numerous Smart Extras, including:

- Access status information.
- Use additional helpful functions.
- Keep your wine refrigerator up to date with the latest Miele developments via software updates.

You can find more detailed information about Smart Extras on the Miele website, in the Apple App Store®, or in the Google Play Store™.

*This is a separate digital offer from Miele & Cie. KG. The range of functions can vary depending on the model and the country. Acceptance of the General Terms and Conditions and Privacy Policy for Miele digital products and services in the Miele app required. Miele reserves the right to change or discontinue the digital offers at any time.

Adjusting the interior fittings

Removing and reinserting the wooden shelves

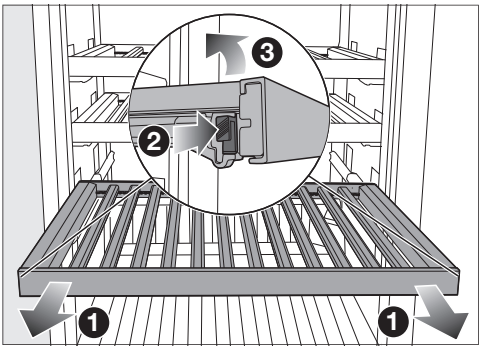

- Pull the wooden shelf out until it stops ❶.
- Press in the retainers ❷ on both sides of the wooden shelf and lift the wooden shelf upward ❸.
- To reinsert the wooden shelf, first place it on the rear of the telescopic runners so that it clicks into place.
- Press the front section of the wooden shelf down onto the telescopic runners so that the retainers click into place.

⚠ Risk of injury from falling wine bottles.
Wine bottles may become wedged in the wooden shelves above and fall out of the wine refrigerator/refrigeration appliance when the shelves are pulled out.
Always pull out the wooden shelves slowly and carefully.

⚠ Risk of damage and injury from broken glass.
If wooden shelves and bottles protrude too far forward, they may damage the glass door when it is closed.
Please ensure that the wooden shelves and wine bottles do not protrude.

Adjusting the wooden shelf (FlexiFrame) to the bottle size

- You can remove or move individual slats on the wooden shelf as required.

This makes it easy to adjust the wooden shelf to suit the size of your wine bottles.

The slats in the bottom shelf cannot be adjusted.

Maximum capacity

KWTUS 7172

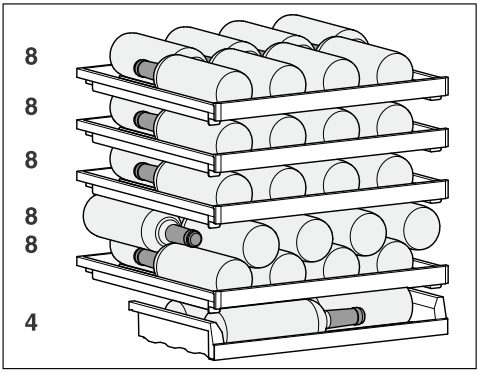

A maximum of 44 Bordeaux-style bottles (0.75 L) can be stored.

⚠ Risk of damage due to overloading.
Exceeding the maximum recommended capacity can lead to damage to the wooden shelves.
Do not exceed the maximum load-bearing capacity of 55 lb (25 kg) for each wooden shelf.
Do not stack bottles on the wooden shelves in more than two layers.

Labeling the labeling strip (NoteBoard)

For quick and easy identification of the wines stored, you can write on the NoteBoards on the wooden shelves.

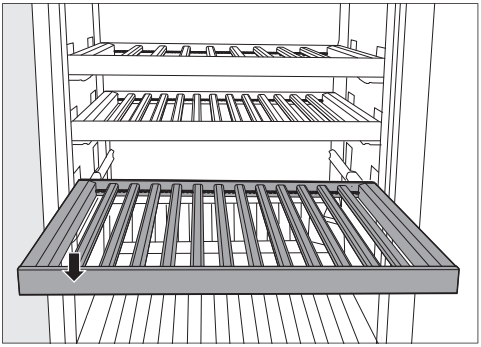

- Pull the wooden shelf out a little toward the front.
- The labeling strip can be wiped clean with a damp cloth.

⚠ Risk of damage from unsuitable cleaning methods.
Cleaning the labeling strips (NoteBoards) with a cleaning agent may damage the coating on them.
Use clean water only to wipe the NoteBoards.

- Label the NoteBoard with the chalk pen supplied.
  Alternatively, we recommend the following products for labeling:

- liquid chalk pens,
  such as an edding 4095 chalk marker
- traditional blackboard chalk

⚠ Risk of damage due to writing with the wrong products.
Never write on the NoteBoard with a ballpoint pen, crayon, pencil, correction pen, wax crayon, oil chalk, or felt-tip pen (e.g., permanent marker, highlighter, foil pen, etc.). They are difficult or impossible to remove from the NoteBoard.
Only use the products recommended to write on the NoteBoard as these can be removed easily.

Optional accessories

A range of useful Miele accessories and care products are available for your wine conditioning unit.

You can purchase products specifically designed for your wine refrigerator—such as appliance care products and accessories—from the Miele online store, Miele Service, or a Miele authorized dealer.

You can access the Miele online store via the following QR code:

Before using for the first time

- Remove all packaging material and protective film.

The short, cross-fixed slats are only used to attach the remaining slats to the wooden shelf.

The short slats can be removed and safely disposed of with household waste. These slats come from surplus production and are used as transport safety devices for reasons of sustainability.

- Clean the inside of the appliance and the accessories (see “Cleaning and care”).

Connecting the wine refrigerator

- Connect the wine refrigerator to the electricity supply as described in “Installation – Electrical connection”.

Miele will then appear on the appliance display, followed by ⏻.

Activating the charcoal filter (Active AirClean filter)

- Activate the Active AirClean filter display (see “Customizing settings – Activating the Active AirClean filter display”).

Positioning the slats on the wooden shelves

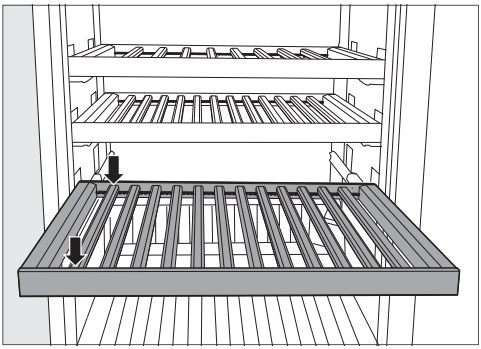

- Position the slats at equal intervals on the wooden shelf and lock them into position.

This provides space on the wooden shelf for the maximum number of bottles (0.75 L; Bordeaux-style bottles).

Setting up the stacking aid

The stacking aid helps to achieve the maximum capacity in the wine refrigerator.

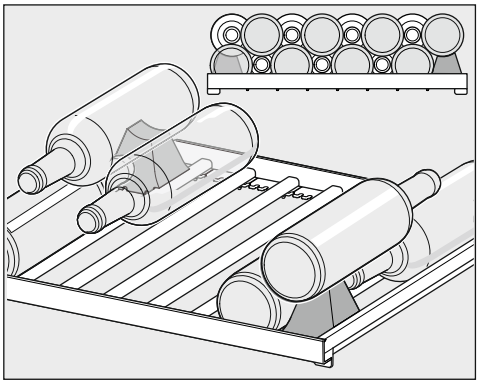

- Insert the stacking aid on the right and left between the two outer slats on the wooden shelf.

Switching the wine refrigerator on

- Tap ⏻ on the display.

If you do not interact with the display for a certain period of time, it switches to energy-saving mode and goes dark.

The wine refrigerator will start to cool and the interior lighting will come on when the appliance door is opened.

Depending on the ambient temperature and the temperature setting, it can take the appliance a few hours to reach the temperature required and for this temperature to then be shown as a constant temperature on the display.

Switching the wine refrigerator off

- Tap ⚙.
- Swipe left or right until ⏻ is shown in the middle.
- Tap ⏻.

The cooling and interior lighting are switched off.

⏻ will appear on the display.

Please note: The wine refrigerator is not disconnected from the power supply when it is turned off.

Switching off for longer periods of time

If, during a long absence, the wine refrigerator is switched off but not cleaned and the door is left shut, there is a danger of bacteria building up inside the appliance.
The wine refrigerator must be cleaned.

If the wine refrigerator is not going to be used for a longer period of time, observe the following:

- Switch the wine refrigerator off.
- Unplug the appliance or trip the circuit breaker.
- Clean the wine refrigerator and leave the door ajar to air the wine refrigerator and avoid odors building up inside it.

Requirements for networking

Note the following requirements for networking:

1. A home network is available at the installation site.
   Have the Wi-Fi password ready.
2. The Miele app is available on a mobile device.
3. You have a user account in the Miele app.

Miele App

The Miele App is available to download free of charge from the Apple App Store® or from the Google Play Store™.

Download on the App Store

ANDROID APP ON Google Play

Setting up networking for the first time

- Tap the ⚙ symbol.
- Swipe left or right until the @ symbol is shown in the middle.
- Tap the @ symbol.

- Tap the connection method you wish to use (app or WPS).

After you have successfully logged in, the ᯤ symbol will appear on the display.

If a connection could not be established, the ⊗ symbol will appear.

- In this case, start the process again.
- To leave the Settings level, tap the ⮌ symbol.

Performing Scan & Connect

- Scan the QR code.

If you have installed the Miele app and have a user account, you will be taken directly to the networking steps.

If you have not yet installed the Miele app, you will be taken to the Apple App Store® or the Google Play Store™.

- Install the Miele app and set up a user account.
- Scan the QR code again.

The Miele app will guide you through the setup process.

(depending on the model)

Setting the temperature

A temperature of between 54 and 57°F (12 and 14°C) is recommended to store wine over the long term.

- Touch the temperature display on the display.
- Swipe left or right until the temperature you want is shown in the middle.
- Tap the temperature you want to confirm.
- To leave this Settings level, tap ⮌.

The temperature display will then change back to the current temperature in the wine conditioning zone.

The temperature in the wine refrigerator will rise:

- the more often the appliance door is opened and the longer it is kept open
- the more wine bottles there are being stored
- the warmer the newly stored wine bottles are
- the higher the ambient temperature surrounding the wine refrigerator This wine refrigerator is designed for use within specific ambient temperatures (climate range). Do not use in ambient temperatures for which it is not designed.

Temperature range

The temperature can be adjusted from 40 to 70°F (5 to 20°C).

Temperature display

In normal operation, the temperature display shows the **current average temperature** inside the wine refrigerator.

Depending on the ambient temperature and the temperature setting, it can take the appliance a few hours to reach the temperature required and for this temperature to then be shown as a constant temperature on the display.

Setting the humidity (ActiveHumidity) in the lower wine conditioning zone

An ambient temperature of between 66 and 82 °F (19 and 28 °C) is required to ensure that the humidity level is set correctly.

- Touch the temperature display.
- Swipe left or right until is shown in the middle.
- Tap .
- Swipe left or right until the humidity (or) you want is shown in the middle.
- Tap to confirm the setting.
- To leave this Settings level, tap ⮌.

Depending on the ambient temperature and the set humidity level, it can take the appliance a few days to reach the set humidity level.

Humidity range

You can set the humidity to 2 levels and therefore adapt it to your individual needs.

- ◊: humidity
- ◊◊◊: High humidity

If you would like to use the lower wine conditioning zone for the long-term storage of wine bottles with natural corks, we recommend setting a high humidity level ◊◊◊.

Please bear in mind that energy consumption will increase slightly as the set humidity level is increased.

Customizing settings

	Settings mode
	Set the brightness of the feature lighting.
	Switch the locking function on, deactivate it temporarily, or switch it off completely.
	Switch Sabbath mode on or off.
	Call up the Sabbath mode version.
	Change the time before the door alarm is triggered.
	Networking
	APP / WPS Set up networking for the first time.
	Activate or deactivate the Wi-Fi connection.
	Reset the network configuration.
	Switch the keypad tone on or off.
	Change the volume of the alarms and audible signals or switch off the alarms and audible signals completely.
	Adjust the display brightness.
°C/°F	Change the temperature unit.
	Switch the demo mode off (only visible when switched on).
	Reset the settings to their factory default settings.
	Access information about your refrigeration appliance.
	Activate the Active AirClean filter display.

The door alarm and other warnings are automatically disabled when the appliance is in Settings mode ⚙.

Setting the brightness of the feature lighting

The feature lighting can be set at different brightness levels or switched off completely.

- Tap ⚙.
- Swipe left or right until is shown in the middle.
- Tap .
- Select the brightness you want by swiping the segment bar to the left or right (level 1–7).
- If you want to switch the feature lighting off completely, swipe to the left until the segment bar goes out completely.
- Confirm the setting you want by tapping the segment bar.
- Alternatively: Confirm the setting you want by tapping ✓.
- To leave this Settings level, tap ↩.
- Close the appliance door.

The modified setting will not be visible until after the appliance door has been closed.

Switching on the lock function 🔒/🔓

- Tap the ⚙ symbol.
- Swipe left or right until the 🔓 symbol is shown in the middle.
- Tap the 🔓 symbol.

When the lock function is switched on, the 🔒 symbol will light up orange.

- To leave the Settings level, tap the ↩ symbol.
- Close the appliance door. Only then will the lock function 🔒 be active.

Deactivating the lock function 🔒/🔓 temporarily

If you want to adjust the temperature, for example, you can deactivate the lock function temporarily:

- Touch the temperature display.
- Touch 🔒 for approx. 6 seconds.

The display switches to the temperature controls.

- Now select the required settings.

Closing the appliance door will reactivate the lock function 🔒.

Switching off the lock function 🔒/🔓 completely

- Tap the ⚙ symbol.
- Touch the 🔒 symbol for approx. 6 seconds.
- Swipe left or right until the 🔒 symbol is shown in the middle.
- Tap the 🔒 symbol.

When the lock function is switched off, the 🔓 symbol will light up white.

- To leave the Settings level, tap the ↩ symbol.

Switching Sabbath mode on

When Sabbath mode is switched on, you cannot adjust any settings.

- Tap the ⚙ symbol.
- Swipe left or right until the symbol is shown in the middle.

- Tap the symbol.

The symbol lights up orange.

- To leave the Settings level, tap the symbol.

If Sabbath mode is switched on, this is indicated on the display for approx. 3 s.

The display then switches off.

Ensure that the appliance door is properly closed, as visual and audible alarms are switched off.

Switching off Sabbath mode

The Sabbath mode function will switch off automatically after approx. 80 hours.

However, you can switch off the Sabbath mode function early.

- Tap the blank display.

The symbol appears.

- Tap the symbol.

The symbol lights up orange.

- Tap the symbol again.

When Sabbath mode is switched off, the symbol will light up white.

- To leave this Settings level, tap .

Changing the time before the door alarm is triggered

- Tap the symbol.
- Swipe left or right until the symbol is shown in the middle.
- Tap the symbol.
- Swipe left or right until the time you want between 30 seconds and 3 minutes 30 seconds is shown in the middle.
- Tap the setting you want to confirm.
- To leave the Settings level, tap the symbol.

Deactivating the Wi-Fi connection

- Tap the symbol.
- Swipe left or right until the symbol is shown in the middle.
- Tap the symbol.
- Tap the symbol to deactivate the Wi-Fi connection.

The symbol appears.

- To leave the Settings level, tap the symbol.

Activating the Wi-Fi connection

- Tap the symbol.
- Swipe left or right until the symbol is shown in the middle.
- Tap the symbol.
- Tap the symbol to activate the Wi-Fi connection.

The symbol appears.

- To leave the Settings level, tap the symbol.

When the Wi-Fi connection is active, the symbol will light up on the display.

Resetting the network configuration

- Tap the symbol.
- Swipe left or right until the symbol is shown in the middle.
- Tap the symbol.
- Swipe right until the symbol is shown in the middle.
- Tap the symbol.

- Tap the ✓ symbol.
- To leave the Settings level, tap the ↩ symbol.

All entered settings and values are reset to the default settings.

The Wi-Fi connection has been deactivated. The ᯤ symbol will go out on the start display.

> Reset the network configuration if you are disposing of or selling your refrigeration appliance, or if you are putting a used refrigeration appliance into operation. All personal data is removed from the refrigeration appliance. This will also ensure that a previous owner is no longer able to access the refrigeration appliance.

Switching off the keypad tone 🔇 ⌨

- Tap the ⚙ symbol.
- Swipe left or right until the 🔊⌨ symbol is shown in the middle.
- Tap the 🔊⌨ symbol.

When the keypad tone is switched off, the 🔇⌨ symbol will light up white.

- To leave the Settings level, tap the ↩ symbol.

Switching on the keypad tone 🔊 ⌨

- Tap the ⚙ symbol.
- Swipe left or right until the 🔇⌨ symbol is shown in the middle.
- Tap the 🔇⌨ symbol.

When the keypad tone is switched on, the 🔊⌨ symbol will light up orange.

- To leave the Settings level, tap the ↩ symbol.

Changing the volume of the alarms and audible signals 🔊/🔇

- Tap the ⚙ symbol.
- Swipe left or right until the 🔊 symbol is shown in the middle.
- Tap the 🔊 symbol.
- Select the volume you want by swiping the segment bar to the left or right (level 1–7).
- If you want to switch the alarms and audible signals off completely, swipe to the left until the segment bar goes out completely.
- Confirm the setting you want by tapping the segment bar.

When the alarms and audible signals are switched off, the 🔇 symbol will light up white.

When the alarms and audible signals are switched on, the 🔊 symbol will light up orange.

- To leave the Settings level, tap the ↩ symbol.

Changing the display brightness ☼

- Tap the ⚙ symbol.
- Swipe left or right until the ☼ symbol is shown in the middle.
- Tap the ☼ symbol.
- Select the brightness you want by swiping the segment bar to the left or right (level 1–7).
- Confirm the setting you want by tapping the segment bar.
- To leave the Settings level, tap the ↩ symbol.

Changing the temperature unit °C/°F

- Tap the ⚙ symbol.
- Swipe left or right until °C or °F is shown in the middle.
- Tap °C or °F to change the temperature unit.

°C or °F will appear on the display.

- To leave the Settings level, tap the ⮌ symbol.

Switching off demo mode

- Tap the ⏻ symbol.
- Tap the ⚙ symbol.
- Swipe left or right until the symbol is shown in the middle.
- Tap the symbol.

After demo mode has been switched off, the refrigeration appliance shuts down and must be switched on again.

Resetting the settings to their factory default settings

- Tap the ⚙ symbol.
- Swipe left or right until the symbol is shown in the middle.
- Tap the symbol.

The symbol appears.

- Tap the ✓ symbol.

The refrigeration appliance shuts down and must be switched on again.

Activating the Active AirClean filter display

- Tap ⚙.
- Swipe left or right until is shown in the middle.
- Tap .

If the Active AirClean filter display is activated, will light up orange.

- To leave this Settings level, tap ⮌.

The data plate located inside the wine refrigerator must not be removed. It contains information which is required in the event of a service call.

Do not let water get into the electronic or the lighting.

⚠ Risk of damage due to moisture penetration.
The steam from a steam cleaner can damage plastic and electrical components.
Do not use a steam cleaner to clean the wine refrigerator.

⚠ Health risk due to soiling entering the appliance.
Soiling that enters the appliance from outside (such as food or drink residues) can cause mold fungi to form in the wine refrigerator at increased temperature and humidity levels.
Only place clean wine bottles and clean accessories in the wine refrigerator.

Cleaning agents

Cleaning agents and care products used inside the wine refrigerator must be food safe.

To avoid damaging the surfaces of your appliance, **do not** use the following:

- cleaning agents containing soda, ammonia, acids, or chloride
- cleaning agents containing limescale remover
- abrasive cleaning agents, such as scouring powder, scouring liquid, or pumice stones
- cleaning agents containing solvents
- stainless steel cleaners
- dishwasher cleaning agents
- oven sprays
- cleaning agents for glass-ceramic cooktops (except to clean the glass front)
- glass cleaners (except to clean the glass front: For this, a glass cleaner containing a little alcohol, but no citric or similar additives, may be used)
- hard, abrasive sponges and brushes, such as pot scrubbers
- eraser sponges
- sharp metal scrapers

We recommend using a clean sponge and lukewarm water with a little liquid dish soap to clean the surfaces of the appliance.

Preparing the wine refrigerator for cleaning

■ Switch the wine refrigerator off.

⏻ appears on the display and the cooling system is switched off.

■ Take any wine bottles out of the wine refrigerator and store them in a cool place.

■ If necessary, take out all removable parts for cleaning (see “Familiarization – Setting up the interior”).

Cleaning the interior of the appliance

Clean the wine refrigerator regularly, or at least once a month.

If soiling is left on for any length of time, it may become impossible to remove under certain circumstances.
Surfaces may become discolored or damaged.
It is therefore best to remove any soiling immediately.

- Clean the interior with a clean sponge, lukewarm water, and a little liquid dish soap.
- Rinse all parts by hand. Do not wash in a dishwasher.
- The **wooden** shelves should only be wiped with a well wrung-out damp cloth. They must **not** be allowed to get wet.

⚠ Risk of damage from unsuitable cleaning methods.
Cleaning the labeling strips (NoteBoards) with a cleaning agent may damage the coating on them.
Use clean water only to wipe the NoteBoards.

- After cleaning, wipe with clean water and dry with a soft cloth.
- Leave the door open to air the wine refrigerator sufficiently for a short while and to prevent odor build-up.
- Clean the appliance door with a glass cleaner.

Replacing the Active AirClean filter

Active AirClean filters can be obtained from Miele Service or via the Miele website.

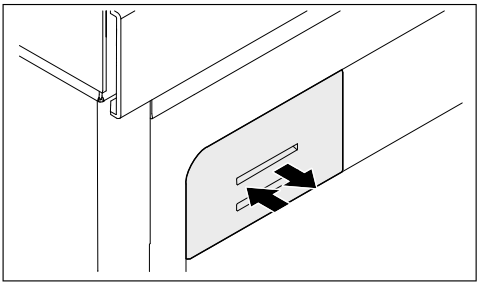

- Press in the filter holder, release it again, and pull it out.

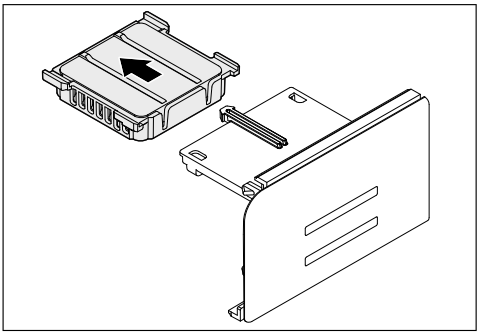

- Remove the used Active AirClean filter.
- Used Active AirClean filters can be disposed of with normal household waste.

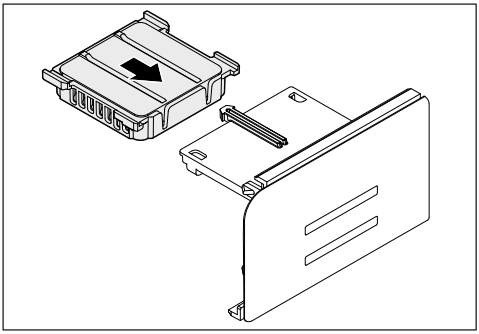

- Insert the new Active AirClean filter.

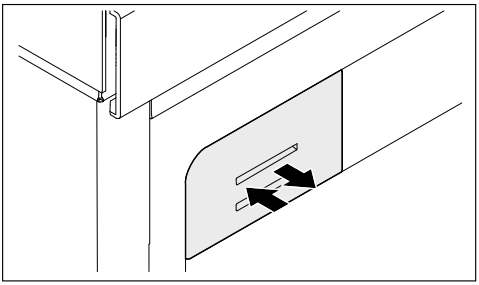

- Push the filter cover in as far as it will go.

Cleaning the door seal

⚠ Risk of damage as a result of incorrect cleaning.
If you treat the door seal with oils or grease, it can become porous.
Do not use any oils or grease on the door seal.

- The door seals should be cleaned regularly with clean water, and then wiped dry with a soft cloth.

Cleaning the ventilation gaps

A build-up of dust will increase the energy consumption of the appliance.

- The ventilation gaps should be cleaned on a regular basis with a brush or vacuum cleaner (you could use a Miele Vacuum Cleaner dust brush, for example).

After cleaning

- Put all parts back in the wine refrigerator.
- Switch the wine refrigerator on.
- Place the wine bottles in the wine refrigerator and close the appliance door.

Automatic defrosting

The wine unit defrosts automatically.

Frequently asked questions

Many malfunctions and faults can be easily remedied. You can save time and money in many cases, as you do not need to contact Miele Service.

More information to help you rectify faults yourself can be found at https://www.mieleusa.com/support/customer-assistance.

To prevent cold from escaping, open the appliance doors as little as possible until the fault has been corrected.

Problem	Possible cause and solution
The wine refrigerator is not cooling.	The wine refrigerator is not switched on. ■ Switch the wine refrigerator on.
	The electrical plug is not inserted in the socket correctly or the plug connector is not inserted into the socket at the back of the appliance correctly. ■ Insert the electrical plug into the socket and the plug connector into the appliance socket.
	The circuit breaker has tripped. There could be a fault with the wine refrigerator, the household electrical wiring, or another appliance. ■ Contact a qualified electrician or Miele Service.

Problem	Possible cause and solution
The compressor is switching on more frequently and for longer periods of time. The temperature inside the wine refrigerator is falling.	The ventilation openings are obstructed or dusty. ■ Do not block the ventilation openings. ■ Clean the ventilation openings on a regular basis to remove any dust.
	The appliance door has been opened too frequently. A large number of wine bottles have been placed in the appliance. ■ Only open the appliance door when necessary and for as short a time as possible. After a while, the temperature will return to normal by itself.
	The appliance door is not properly closed. ■ Close the appliance door. After a while, the temperature will return to normal by itself.
	The ambient temperature is too high. The higher the ambient temperature, the longer the compressor runs. ■ See the information in “Installation – Installation site”.
	The temperature in the wine refrigerator is set too low. ■ Correct the temperature setting.
Condensation has built up inside the wine refrigerator. The appliance door may not close correctly.	The door seal has come out of its groove. ■ Check that the door seal is correctly positioned in the groove.
	The door seal is damaged. ■ Check whether the door seal is damaged.
The door seal is damaged or needs to be replaced.	No tools are required to change the door seal. ■ Change the door seal. A replacement is available from Technical Service.

General problems with the wine conditioning unit

Problem	Possible cause and solution
The slats in the wooden shelves are warping.	A change in volume due to moisture absorption or drying out is a typical characteristic of wood. An increase in humidity in the wine refrigerator causes wooden parts to warp. Therefore, under certain circumstances, wooden parts can warp and cracks can develop. Knots and grain patina are part of the natural character of the wood.
Bacteria has begun to form on the wine bottle labels.	Bacteria may form on the labels, depending on the type of label adhesive used. ■ Clean the wine bottles and remove any adhesive residue.
A white deposit has formed on the wine bottle corks.	The corks have oxidized due to contact with the air. ■ Use a dry cloth to wipe off the deposit. The deposit will not affect the quality of the wine.
An alarm does not sound even though the appliance door has been open for a long time.	This is not a fault. The alarm has been switched off in Settings mode. If you want to switch the audible alarm back on again: ■ Tap the ⚙ symbol. ■ Swipe left or right until the 🔇 symbol is shown in the middle. ■ Tap the 🔇 symbol. ■ Select the volume you want by swiping the segment bar to the right. ■ Confirm the setting you want by tapping the segment bar. When the alarms and audible signals are switched on, the 🔊 orange symbol will light up.

Messages in the display

Message	Possible cause and solution
lights up on the display and the wine refrigerator is not getting cold. However, the appliance and the interior lighting are working fine.	Demo mode has been activated. ■ Tap ⏻. ■ Tap ⚙. ■ Swipe left or right until is shown in the middle. ■ Tap . After demo mode has been switched off, the wine refrigerator shuts down and must be switched on again.
Nothing is visible on the display. The display is completely blank.	Sabbath mode is switched on: The interior lighting is switched off and the wine refrigerator is cooling. ■ Tap the blank display. will appear on the display. ■ Tap . will light up orange. ■ Tap the symbol again. When Sabbath mode is switched off, the symbol will light up white. **Energy-saving mode** is switched on: If you do not interact with the display for a certain period of time, it switches to energy-saving mode and goes dark.
lights up on the display and the wine refrigerator cannot be used.	The lock function has been activated. ■ Unlock the wine refrigerator temporarily or switch the lock function off completely (see “Customizing settings”).
lights up on the display and an audible signal sounds.	The Active AirClean filter display is reminding you that the Active AirClean filter needs to be changed. ■ Replace the Active AirClean filter (see “Cleaning and care – Replacing the Active AirClean filter (charcoal filter)”). Confirm that you have changed the Active AirClean filter by touching on the display. will go out on the display.
will light up yellow on the display, an alarm will also sound, and the interior lighting will flash.	The **door alarm** has been activated. ■ Tap . The alarm will stop, will go out, and the interior lighting will light up again constantly.

Message	Possible cause and solution
🌡⚠ lights up red on the display and an alarm also sounds.	The temperature alarm has been activated; the temperature has risen higher or fallen lower than the temperature set. Possible reasons for this include: – The appliance door has been opened too frequently. – The ventilation openings have been blocked. – A prolonged power outage has occurred. ■ Tap 🌡⚠. 🌡⚠ will go out and the alarm will stop. The warmest temperature recorded in the wine refrigerator will flash for about 1 minute in the temperature display. Then the temperature display will change to the current temperature. You can exit from the flashing temperature display early: ■ Touch the temperature display. The warmest temperature display will disappear. The temperature display then reverts to showing the current temperature in the wine refrigerator. ■ Rectify the cause of the alarm.
-C⚠ lights up red on the display and an alarm also sounds.	Indication of a power outage: The temperature in the wine refrigerator over the last few days or hours has risen too high because of a power outage or interruption to the power supply. ■ Tap -C⚠. -C⚠ will go out and the alarm will stop. The warmest temperature recorded in the wine refrigerator will flash for about 1 minute in the temperature display. Then the temperature display will change to the current temperature. You can exit from the flashing temperature display early: ■ Tap the temperature display. The warmest temperature display will disappear. The display will then revert to showing the current temperature. The wine refrigerator will go back to the last temperature setting when the power is back on. ■ Rectify the cause of the alarm.

Message	Possible cause and solution
⚠ **lights up red on the display and a fault code F with numbers may appear. An alarm is also sounding.**	A fault has occurred. ■ Tap 🔇 on the display to switch the alarm off. ■ Contact Miele Service. To report the fault, you need the fault code and also the model number and serial number of your wine refrigerator. You can access this information on the display. ■ To do this, touch ℹ on the display. The appliance data required will be shown on the display. Confirm with ✓ to exit the information display and the fault code will be shown again on the display. The wine refrigerator can be switched off directly from the fault message display.
	There is an appliance fault: This display always has priority over any settings which have just been selected. An appliance fault has priority over any current door and/or temperature alarms displayed.

Interior lighting

⚠ Risk of electric shock due to exposed, live electrical components.
When removing the lighting cover, there is a risk of coming into contact with live electrical components.
Do not remove the lighting cover. The LED lighting may only be repaired or replaced by Customer Service.

⚠ Risk of injury from LED lighting.
This lighting corresponds to risk group RG 2. If the cover is defective, there is a risk of eye injury.
If the lighting cover is defective, do not look from a close range directly into the lighting with optical instruments (e.g., magnifying glass or similar).

Frequently asked questions

Problem	Possible cause and solution
The interior lighting is not working.	The wine refrigerator is not switched on. ■ Switch the wine refrigerator on.
	Sabbath mode is switched on: The display is blank and the wine refrigerator is cooling. ■ Tap the blank display. will appear on the display. ■ Tap . will light up orange. ■ Tap the symbol again. When Sabbath mode is switched off, will light up white.
	To avoid overheating, the interior lighting switches itself off automatically after approximately 15 minutes if the appliance door is left open. If this is not the cause, there is a fault. ■ Contact Miele Service.
The interior lighting is on even when the appliance door is closed.	This is not a fault. The feature lighting is switched on. ■ To switch off the feature lighting, touch the sensor control for the feature lighting on the display. The sensor control no longer lights up orange.
The interior lighting is pulsating.	This is not a fault. The door alarm has been activated.

Causes of noises

The wine refrigerator is producing various noises during operation. If the cooling performance is low, the wine refrigerator will conserve energy but operate for longer. The volume will be lower. Items will be chilled faster if the cooling performance is high. The volume will be higher.

Normal noises	What is causing them?
Hissing	Refrigerant is being injected into the cooling circuit.
Bubbling, gurgling, splashing	Refrigerant is circulating through the pipes.
Humming	The wine refrigerator is cooling.
Clicking	The thermostat is switching the compressor on or off.
Humming, whirring	The fan is running.
Cracking	Materials are expanding inside the wine refrigerator.
Rattling	Valves or flaps are active.
Slurping (wine refrigerators with soft-close mechanism)	The appliance door with soft-close mechanism is being opened or closed.
Please keep in mind that a certain amount of noise is unavoidable (from the compressor and the refrigerant circulating through the cooling circuit).	

Noises	Cause and solution
Vibrating, rattling, clinking	The wine refrigerator is uneven. Check the alignment of the wine refrigerator again using the level. Do this by raising or lowering the adjustable feet underneath the wine refrigerator (depending on the model). For niches of 55 1/8" (140 cm) and more: Place the stabilizing rods supplied underneath the appliance base.
	Drawers, baskets, or shelves are jiggling or are stuck. Check all removable items and reinsert them correctly.
	Bottles or containers are touching each other. Separate bottles or containers slightly.
	The transport cable clips (depending on the model) are hanging loose at the back of the appliance. Remove the transport cable clips.

Information to help you rectify faults yourself and about Miele spare parts can be found at www.miele.com/service.

Contact in the event of a fault

In the event of a fault which you cannot remedy yourself, please contact your Miele dealer or Miele Customer Service.

You can book a Miele Customer Service call online at www.miele.com/service.

Contact information for Miele Customer Service can be found at the end of this document.

Please quote the model identifier and serial number of your appliance (SN) when contacting Miele Customer Service. Both numbers can be found on the data plate inside the refrigeration appliance or, depending on the model, in Settings mode under Information ℹ.

Appliance warranty and product registration

You can register your product and/or view the manufacturer´s warranty terms and conditions for Miele appliances and vacuum cleaners at www.mieleusa.com.

Installation site

⚠ Risk of damage and injury from the wine refrigerator tipping over.
The wine refrigerator is very heavy and can tip forward when the appliance door is open.
Keep the appliance door shut until the wine refrigerator has been installed and secured in its niche in accordance with these operating and installation instructions.

⚠ Fire hazard and risk of damage from appliances that give off heat.
Appliances which give off heat can catch fire and set fire to the wine refrigerator.
This wine refrigerator must not be installed underneath a cooktop.

⚠ Risk of damage due to high humidity.
In environments with high humidity, condensation can build up on the external wine refrigerator panels.
This condensation can cause corrosion on external appliance panels.
Install the wine refrigerator with sufficient ventilation in a dry and/or air-conditioned room.
After installation, please make sure that the appliance door closes properly and that the specified ventilation openings are adhered to.

⚠ Risk of damage caused by appliances discharging vapors.
Installing appliances that discharge vapors behind the wine refrigerator will put it at risk of damage.
Do not install appliances that discharge air or vapors behind the wine refrigerator. Provide a separate air guide or install a partition wall between the appliances.

⚠ Fire hazard and risk of damage from open flames.
Open flames can set fire to the wine refrigerator.
Keep open flames (e.g., a candle) away from the wine refrigerator.

This appliance should be installed in a dry, well-ventilated room.

When deciding where to install your wine refrigerator, please keep in mind that it will use more energy if installed near to a heater, a range, or another appliance that gives off heat. Direct sunlight should also be avoided.
The higher the room temperature, the longer the compressor has to run and the higher the energy consumption is.

When installing the wine refrigerator, please note the following:

- The electrical outlet must be easily accessible in an emergency and not concealed behind the appliance.
- The electrical plug and power cord must not touch the rear of the wine refrigerator as they could be damaged by vibrations from the appliance.
- Do not plug in other appliances behind the wine refrigerator.
- When installing the wine refrigerator, make sure that the power cord does not get trapped or damaged.

- Do not position or use power bars, distributor strips, or other electronic devices (such as halogen transformers) at the rear of the appliance.
- The floor at the installation site must be horizontal and level and must be as high as the surrounding floor.

⚠ Danger from broken glass!
Danger of injury due to broken glass! If installed at altitudes above 4,900 ft (1,500 m) there is a risk of the glass in the door breaking because of changes in air pressure. Shards of glass can cause severe injury if not handled with care.

Climate range

This wine refrigerator is designed for use within specific ambient temperatures (climate range). Do not use in ambient temperatures for which it is not designed. The climate range is stated on the data plate inside the wine refrigerator.

Climate range	Ambient temperature
SN	50 to 90°F (10 to 32°C)
N	61 to 90°F (16 to 32°C)
ST	61 to 100°F (16 to 38°C)
T	61 to 109°F (16 to 43°C)
SN-ST	50 to 100°F (10 to 38°C)
SN-T	50 to 109°F (10 to 43°C)

A lower ambient temperature will cause the compressor to switch off for longer periods, meaning that the wine refrigerator is unable to maintain the required temperature in some circumstances.

Ventilation

The wine refrigerator is ventilated through a ventilation grille in its toe-kick.

⚠ Fire hazard and risk of damage due to insufficient ventilation.
If the wine refrigerator is not ventilated sufficiently, the compressor will run more frequently and for longer periods. This causes increased energy consumption and an increased compressor operating temperature, which can result in damage to the compressor.
Please ensure that there is adequate ventilation around the wine refrigerator.
It is essential to observe the required ventilation openings.
The ventilation openings must never be obstructed.
They must also be cleaned on a regular basis to remove dust.

Side-by-side

This wine conditioning unit can be installed side-by-side with another refrigeration appliance.

Tip: Please contact Miele for specific information about which combinations will work with your appliance.

Changing the door hinges

⚠ Risk of injury and damage to the appliance due to heavy door.
There is an increased risk of injury and damage if the door hinging is installed by a single person.
Always change the door hinging with the help of a second person.

⚠ Risk of crushing at the hinge.
Fingers can get trapped in or around the hinge.
Do not reach into the hinge when opening and closing the door.

The wine refrigerator is supplied with right-hand hinging. If left-hand hinging is required, the door hinging must be changed (see installation instructions) before the wine refrigerator is installed in the niche.

Tip: Place a suitable cover on the floor in front of the wine refrigerator to protect the appliance door and your floor from damage when changing the hinging.

⚠ Risk of injury and damage!
The glass door can drop.
When changing the door hinging, make sure that all fixing parts are securely screwed into position.

Be careful not to damage the door seal. If the door seal is damaged, the appliance door may not close properly and cooling will be insufficient.

Carry out the door hinge reversal according to the installation instructions (see QR-Code).

Material number 12 849 660

Ordering printed installation instructions

You can order printed installation instructions free of charge from Miele.

All the contact information you need for Miele can be found at the end of this document. Quote the model number and the serial number from the data plate when placing your order.

Custom door panel

– Gap

Depending on the style of kitchen cabinetry, the thickness and edge radius of the door panel and the vertical gap are specified.

It is essential to pay attention to the following:

If the gap between the wine refrigerator door panel and the adjacent cabinet front or wall on the hinged side is too small, the appliance door could collide with the adjacent cabinet front or wall when opened.

It may be necessary to adjust the size of this gap to suit the thickness and edge radius of the door panel.

Tip: This must be taken into consideration when planning your kitchen and when replacing an old wine refrigerator with a new one to ensure the installation conditions required are met.

Door panel thickness **A** [in/mm]	Gap **X** [in/mm] for different edge radii **B**			
	R0	R1.2	R2	R3
≥5/8-3/4" (16–19)	min. 1/8" (3)			
13/16" (20)	3/16" (5)	3/16" (4)	3/16" (4)	1/8" (3.5)
13/16" (21)	3/16" (5.5)	3/16" (5)	3/16" (4.5)	3/16" (4)
7/8" (22)	1/4" (6.5)	1/4" (6)	3/16" (5.5)	3/16" (5)

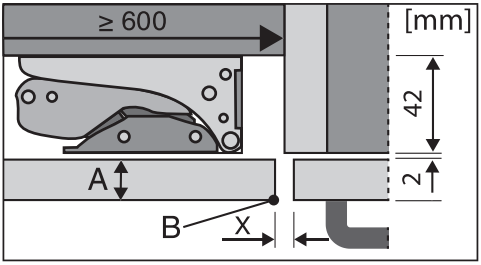

≥ 23 5/8" (600)

Adjacent cabinet front

A = Door panel thickness
B = Edge radius
X = Gap

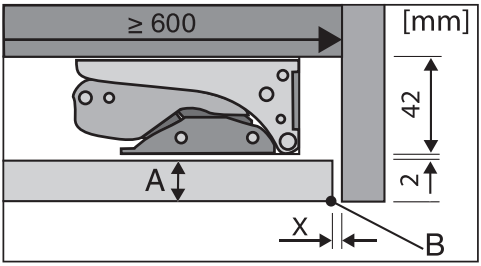

≥ 23 5/8" (600)

Adjacent side wall

A = Door panel thickness
B = Edge radius
X = Gap

Tip: Install a spacer between the cabinet body and the side wall. This way you will get a sufficiently wide gap.

Weight of the door panel

⚠ If the door panel is too heavy, this can cause damage.

Installing a door panel which is heavier than the maximum permitted weight could damage the hinges. This damage can affect various factors, such as operation of the appliance.

Before installing the door panel, ensure that the weight of the door panel does not exceed the maximum permitted weight.

The maximum permissible weight of the door panel is 22 lb (10 kg).

Limiting the opening angle of the appliance door

The door hinges are set at the factory to enable the appliance door to be opened wide.

If the opening angle of the appliance door needs to be limited to approx. 90°, the hinge can be adjusted to accommodate this.

The locking pins for limiting the door opening must be installed before the wine refrigerator is installed.

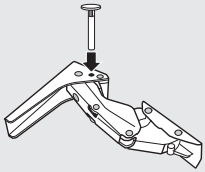

- Insert the locking pins supplied for limiting the door opening into the hinges from above.

The appliance door opening angle is now limited to approximately 90°.

Installation dimensions

Niche/side view

All dimensions are given in inches (mm).

The refrigeration appliance will function correctly if the specified ventilation openings are kept clear.

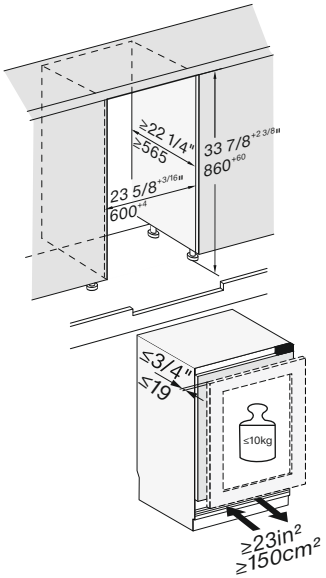

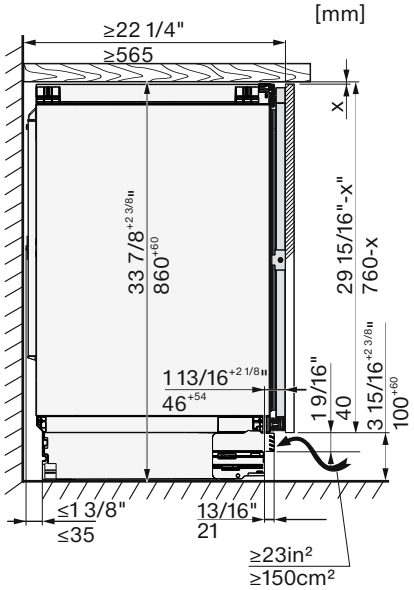

Connections and door panel dimensions

All dimensions are given in inches (mm).

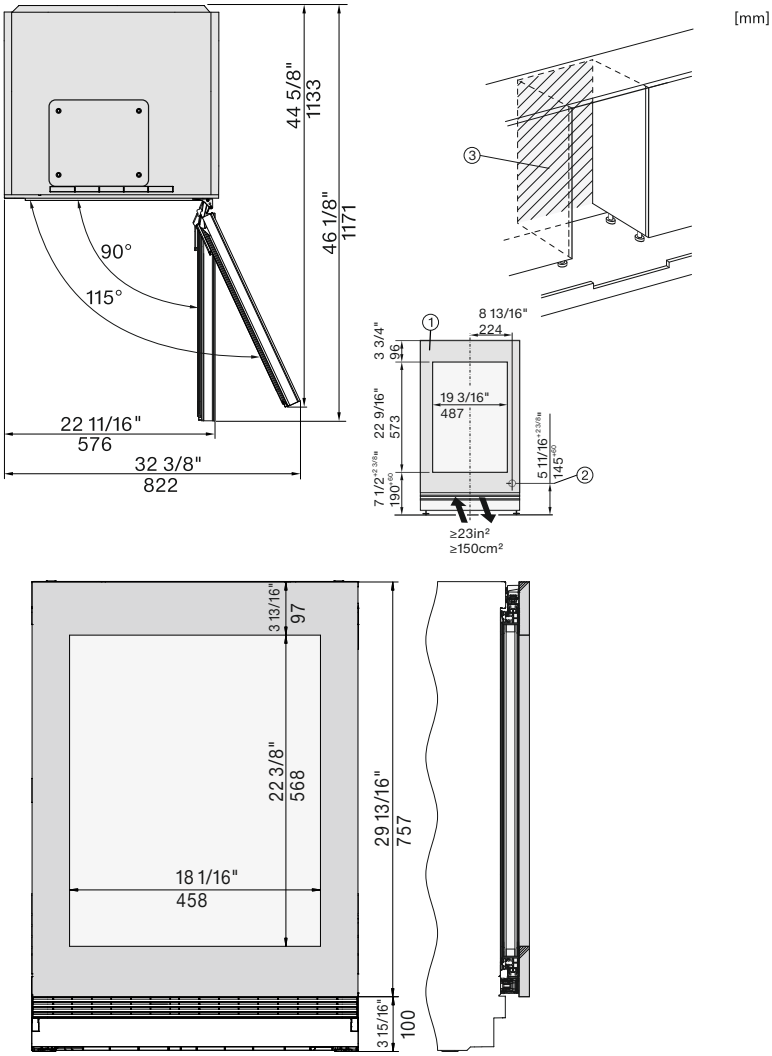

① Front view

② Power cord, length = 86" (2,200 mm)

③ No connections permitted in the rear panel

Installing the wine conditioning unit

To install the wine refrigerator, you will need the following tools:

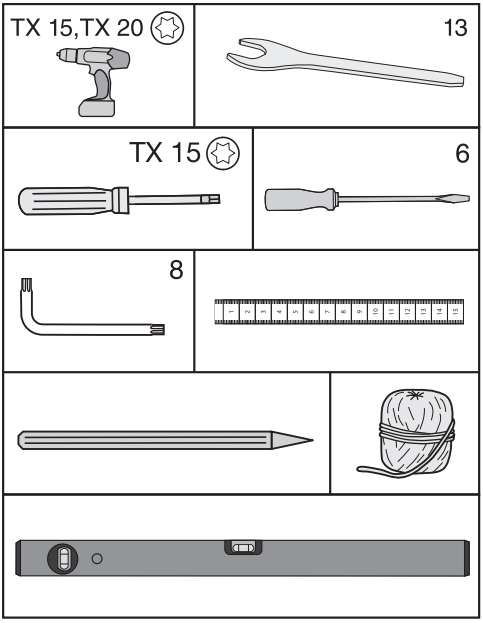

Tip: Store the enclosed metal rod in a safe place. It is required for adjusting the rear appliance feet.

Preparing the wine refrigerator

- Position the wine refrigerator directly in front of the niche.
- Take hold of the toe-kick facing from the side and pull it forward and off.

You have a choice of two different ways of securing your wine refrigerator:

1. Secured at the top
   This method is suitable for securing the appliance underneath a plastic countertop, e.g., laminate. The countertop must be suitable for screwing a fixing bracket to.
   With the feet fully extended, the wine refrigerator should sit lightly tensioned between the floor and the countertop.
2. Secured at the side
   This method is suitable for securing the appliance underneath a solid countertop, e.g., granite. The cabinet side walls to the right and left of the wine refrigerator must be suitable for screwing fixing brackets to.
   With the feet fully extended, the wine refrigerator will sit lower than the countertop.

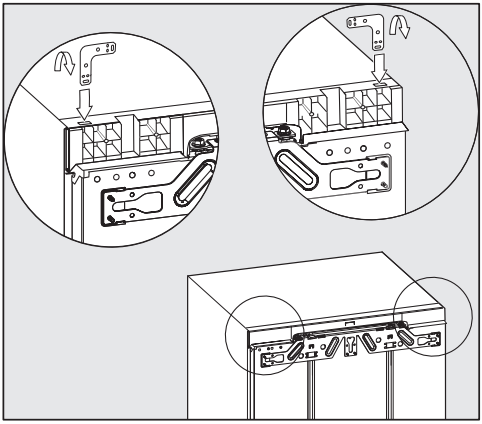

1. Secured at the top

- Install the bracket in the slot in the top of the appliance.
- Bend the bracket at the perforated position.

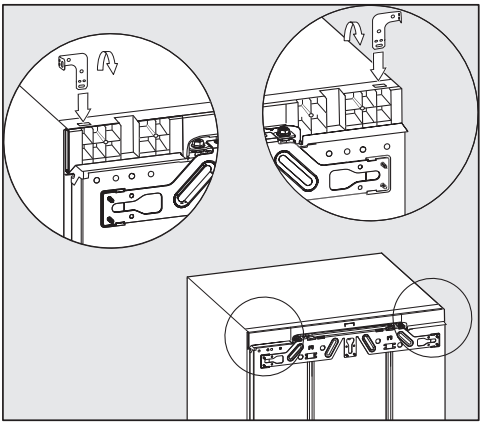

2. Secured at the side

Both ends of the bracket must be bent.

- Install the bracket in the slot in the top of the appliance.
- Bend the bracket at the perforated position.
- Remove the bracket from the slot and insert the straight end of the bracket.
- Now bend this end of the bracket at the perforated position.

Pushing in the wine refrigerator

⚠ Risk of damaging the power cord.
When pushing the wine refrigerator into its niche, the power cord can get trapped and damaged.
Push the wine refrigerator carefully into the niche.

⚠ Risk of damaging the floor.
Moving the wine refrigerator can cause damage to the floor.
Move the wine refrigerator carefully on floors that are sensitive to scratching.

⚠ Risk of damaging the adjustable feet.
The adjustable feet can break off.
The feet should be almost fully screwed in when you push the wine refrigerator into the niche.

Tip: Before pushing the appliance into the niche, loosen the two rear feet by half a turn. After pushing it into the niche, the feet will be easier to adjust from the front (see “Aligning the wine refrigerator”).

- Position the power cord so that the wine refrigerator can be connected easily once installed.

Tip: Tie a piece of string to the electrical plug to “lengthen” the power cord; this will help you to push the appliance into position.
Then pull the power cord through the cabinet by the other end of the string.

If the wine refrigerator is pushed too far into the niche, the appliance door may not close properly once the door panel has been installed. This can cause ice to build up and condensation to accumulate, and cause the appliance to malfunction. These issues can all lead to increased energy consumption.
Push the wine refrigerator into the niche, making sure a gap of **1 5/8" (42 mm)** is maintained all round between the appliance and the front of the cabinet side walls.

- Push the refrigeration appliance into the niche until the front edges of the hinges at the top and bottom are flush with the front edge of the cabinet side wall.

This ensures a gap of **1 5/8" (42 mm)** to the front edges of the cabinet side walls all the way round.

On **cabinets with door fittings (e.g., knobs, raised seals)**, the dimension of these must be taken into account to ensure that there is a gap of **1 5/8" (42 mm)** all round.

- Pull the wine refrigerator forward by the appropriate dimension.
- Check again to make sure there is a gap of **1 5/8" (42 mm)** to the front edges of the door fittings all the way round.

Tip: If possible, remove door fittings and push the wine refrigerator into the niche until all fixing brackets at the top and bottom are in line with the front edge of the cabinet side wall.

Aligning the wine refrigerator

When securing the wine refrigerator in the niche at the top, it should sit lightly tensioned between the floor and the countertop.

- Adjust the front and rear feet alternately according to the niche height and make sure the wine refrigerator is correctly aligned.

Proceed as follows:

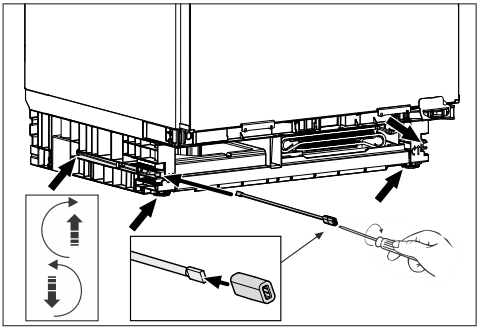

- Adjust both rear feet with appropriate screws at the front right and left in the base using the rod supplied and a flat-head screwdriver.
- Unscrew the two front feet alternately with the rear ones. The maximum adjustment range is 2 3/8" (6 cm).

Tip: As soon as the feet have been unscrewed slightly, you can adjust them with a screwdriver at the bottom of the foot.

The foam ① attached to the ventilation grille ensures the airflow is separated to prevent malfunctioning of the appliance.

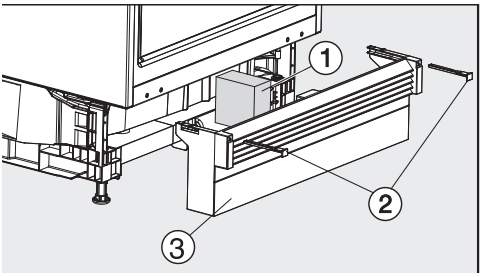

- Move the toe-kick facing and ventilation grille ③ into position, but do not fix it in place yet.

Without a continuous toe-kick facing:

- Pull the toe-kick facing ③ forward until the ventilation slots are in alignment with the toe-kick facings on the adjacent cabinets.

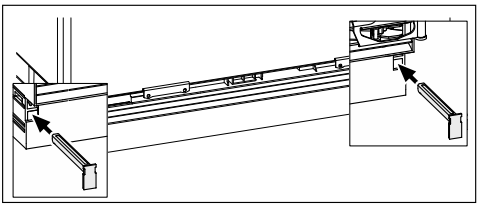

- Hold the toe-kick facing securely and screw it into place on the right and left using the bolts supplied ②.

With the toe-kick facing attached, the rear feet can only be adjusted when the toe-kick facing is fully inserted. Otherwise, the rod is not long enough.

With a continuous toe-kick facing:

- Push the toe-kick facing and ventilation grille ③ right up against the wine refrigerator, and attach it to the right and left using bolts ②.

If a continuous toe-kick facing is to be installed, a suitable ventilation gap will need to be cut into it for the ventilation grille of the wine refrigerator.

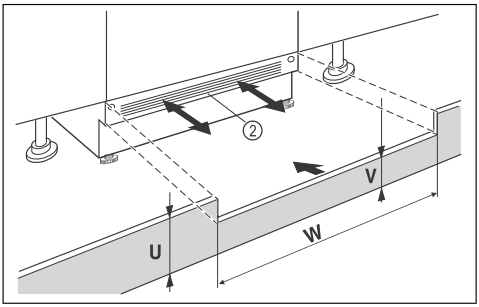

- Trim the toe-kick facing (U) to the correct height.
- Adjust the height (V) along the niche width (W) underneath the appliance toe-kick facing ②.

Aligning the wine refrigerator with taller cabinet doors

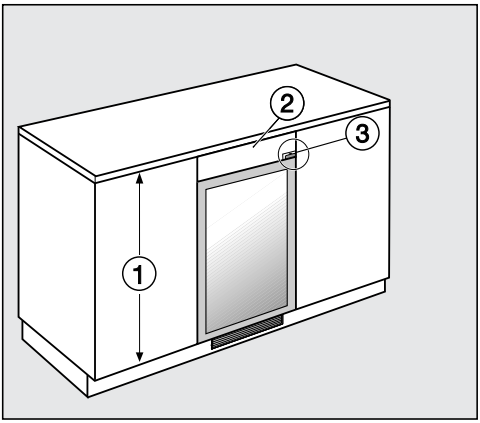

If adjacent cabinet fronts ① are taller than the wine refrigerator door, the wine refrigerator can be aligned with the adjacent cabinet fronts using a filler panel ②.

The filler panel must be made exactly to measure. Please also take into account the door hinge ③ when having the filler panel made (depending on the model).

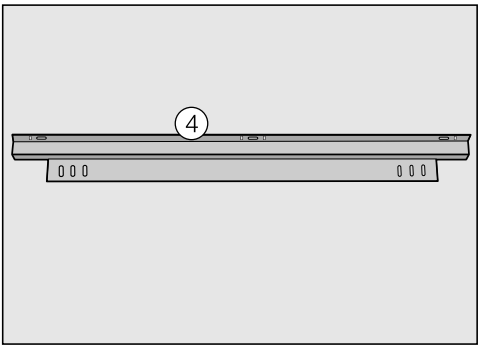

A fixing bracket ④ is required to secure the filler panel. This is available from Miele Service or from specialty dealers. The fixing bracket is installed on the wine refrigerator:

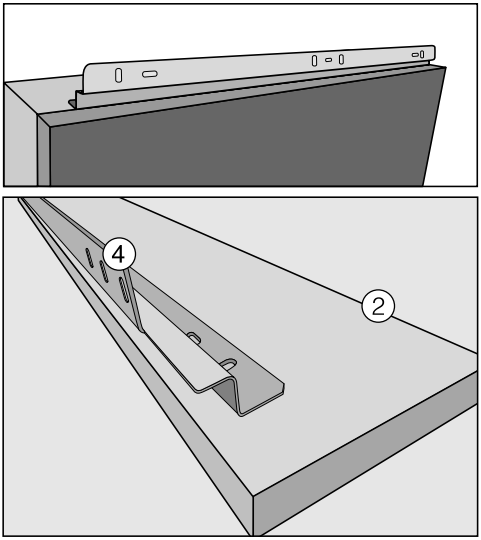

- Fix the fixing bracket ④ to the back of the filler panel ②.
- Pull the wine refrigerator as far as you need to out of the niche so that you can tilt it toward you.
- Loosely screw the fixing bracket ④ and filler panel ② to the wine refrigerator.
- Align the filler panel with the wine refrigerator door to give a flush finish.
- Now tighten the screws.
- You can now push the wine refrigerator into the niche.

Securing the wine refrigerator in the niche

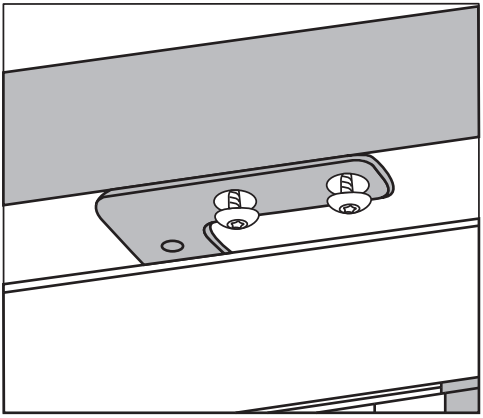

1. Secured at the top

- Screw the wine refrigerator in place underneath the countertop with two screws in each case.

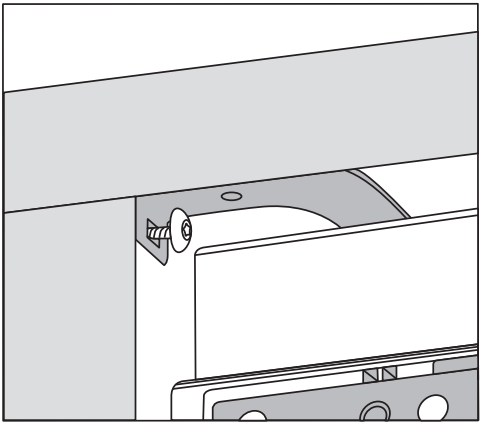

2. Secured at the side

- Screw the wine refrigerator into the niche on the right and left with one screw in each case.

Installing the door panel

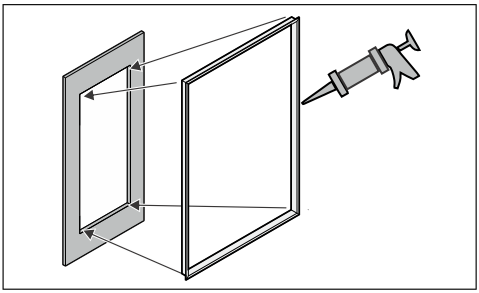

- Affix an optional profile frame to the cut-out.
- Install the handle on the door panel. It is not possible to do this later on.

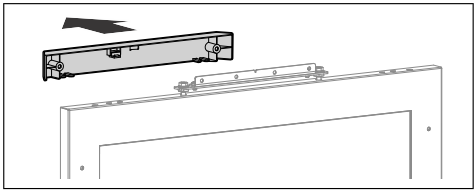

- Remove the cover.

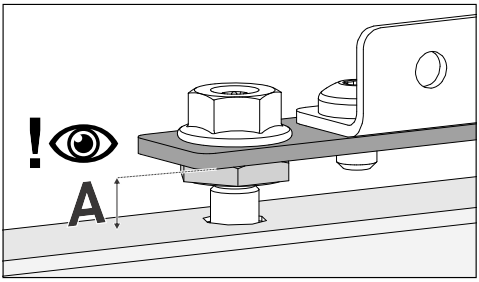

- Check the gap between the appliance door and the bottom of the mounting panel (A) and ensure it is 5/16" (8 mm).
- Adjust the gap if necessary.

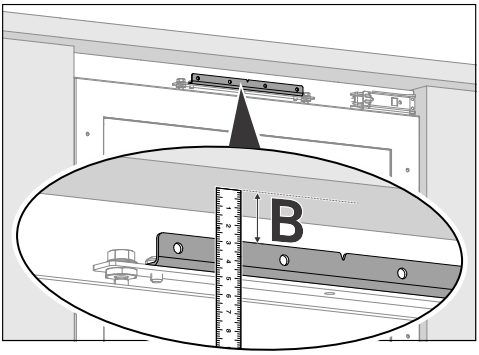

■ Measure the gap (B) between the bottom of the countertop and the top of the fixing bracket.

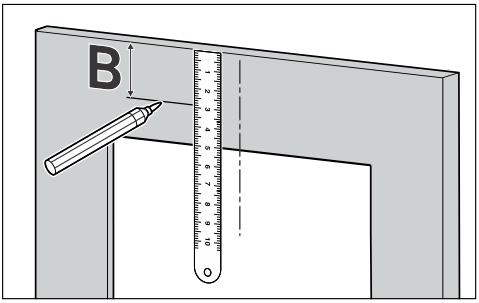

■ Mark the gap (B) on the inner side of the door panel.

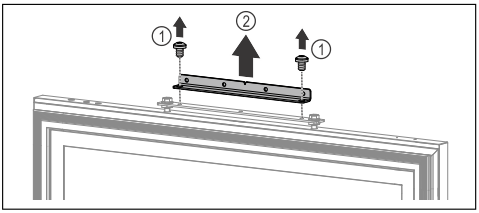

■ Remove the screws and the fixing bracket.

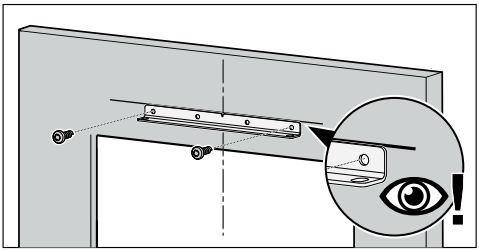

Tip: Pay attention to the length of the screws.

■ Align the fixing bracket with the marked gap and screw it to the door panel in the center.

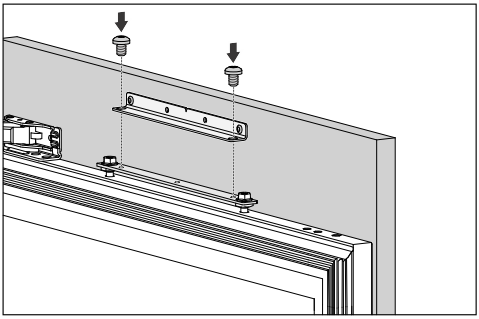

■ Fasten the door panel to the appliance.

■ Close the door.

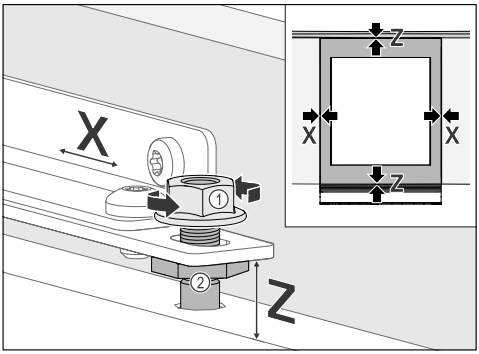

■ Check the gap to the adjacent cabinet doors.

- Align the door panel laterally by loosening the counter nuts ① and moving the panel in the **X** direction.
- Tighten the counter nuts ①.
- Align the door panel vertically **Z** and in terms of its lateral inclination by adjusting the adjusting bolt ②.

The door panel is flush with the adjacent cabinet fronts.

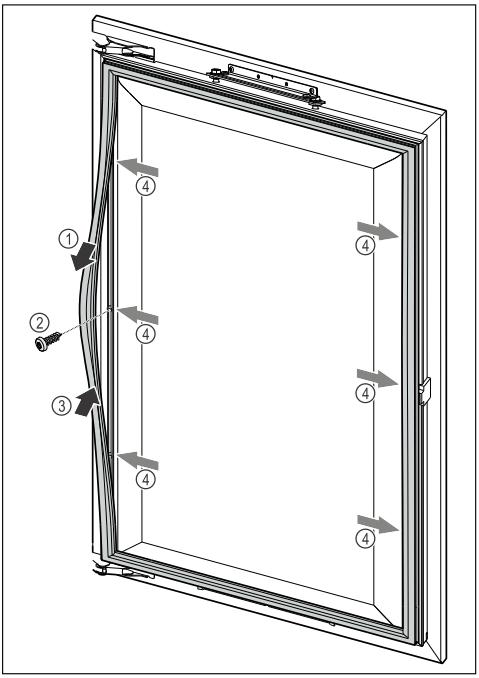

Tip: Pay attention to the length of the screws.

- Detach the seal at the point shown ① and screw the door panel in place using the drilled hole underneath ②.
- Then put the seal back in place ③.
- Repeat these steps at all the other fastening points ④.

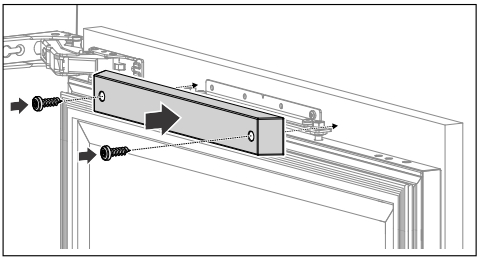

- Attach the top cover and tighten the screws to ensure that the door closes properly.

Electrical connection

⚠ Risk of electric shock!

The appliance must only be switched on when it has been installed in accordance with the installation instructions.

Ground the appliance.

The appliance must not be grounded via a gas pipe.

If in doubt, have a suitably qualified and experienced electrician check that the installation complies with relevant regulations.

Do not install a fuse into neutral current or grounding electrical circuit.

Do not use extension cords or ungrounded (two prong) adapters.

Do not use a frayed or damaged power cord.

⚠ Risk of electric shock!

For protection against electric shock, this appliance is equipped with a pole-free plug which is protected against reverse polarity. The electrical outlet must be properly grounded.

Do not remove the round grounding connector pin from the plug.

Use only a grounded plug adapter.

Wait for 1 hour after installation before plugging the appliance into the power supply. This allows coolant and refrigerator oil to settle in accordance with regulations.

Ensure that the voltage of the power supply corresponds with the connection voltage of the appliance. A power supply of 110–120 V, 60 Hz and 10–16 Amp, which is protected by a power switch or a fuse, is required to operate the appliance.

The manufacturer recommends operating the appliance on a dedicated circuit to avoid overloading the electrical circuit.

All relevant legal electrical, fire, and building regulations must be observed when installing the electrical outlet and/or the appliance.

In certain countries, appliances are required to be connected to the electrical supply via a wall-mounted ON/OFF switch.

To avoid the risk of fire, electric shock, or other injuries, the appliance must be installed and connected by a suitably qualified electrician in accordance with all relevant local and national regulations and standards, including fire prevention.

The socket must not be concealed behind the appliance and must be easily accessible so that the appliance can be quickly disconnected from the electrical supply in case of an emergency.

If the outlet is no longer accessible after installation, an additional means of disconnection must be provided for all poles. Suitable means of disconnection include switches with an all-pole disconnect device with a contact opening of at least 1/8" (3 mm). These can be circuit breakers, fuses, and relays.

The plug and power cord must not come into contact with the back of the appliance as vibrations can cause damage to these components. This could result in a short circuit.

Do not plug other appliances into electrical outlet behind this appliance.

Temporary or permanent operation on an autonomous power supply system or a power supply system that is not synchronized with the grid power supply (e.g., island networks, back-up systems) is possible. A prerequisite for operation is that the power supply system complies with the specifications of EN 50160 or an equivalent standard. The function and operation of the protective measures provided in the domestic electrical installation and in this Miele product must also be maintained in isolated operation or in operation that is not synchronized with the grid power supply, or these measures must be replaced by equivalent measures in the installation.

If the power cord needs to be replaced, this must be performed by a qualified technician.

Connecting the appliance

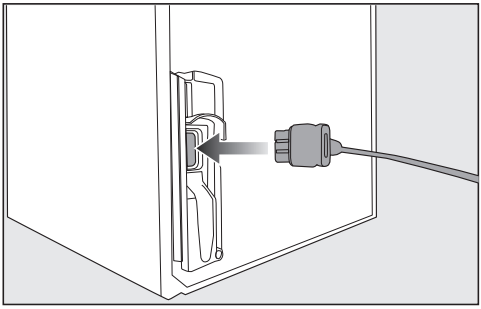

- Insert the electrical plug into the back of the refrigeration appliance.

Make sure that the electrical plug has clicked into position correctly.

- Insert the electrical plug of the refrigeration appliance into the socket.

The refrigeration appliance is now connected to the electricity supply.

Declaration of conformity

Frequency range	2.412 GHz – 2.462 GHz
Maximum transmitting power	< 100 mW

Copyrights and licenses

For the purpose of operating and controlling the communication module, Miele uses proprietary or third-party software that is not covered by open source licensing terms. This software/these software components are protected by copyright. The copyrights held by Miele and third parties must be respected.

In addition, the integrated communication module contains software components which are distributed under open source licensing terms. You can access these open source components along with the associated copyright notices, copies of the valid licensing terms, and any additional information locally via IP using a web browser (http[s]://<ip address>/Licenses). The liability and warranty arrangements for the open source licenses displayed in this location only apply in relation to the respective rights holders.

Please have the model and serial number of your appliance available when contacting Customer Service.

U.S.A.

Miele, Inc.

National Headquarters
9 Independence Way
Princeton, NJ 08540
www.mieleusa.com

Customer Support
Phone: 888-99-MIELE (64353)
info@mieleusa.com

Canada

Importer
Miele Limited

Headquarters and Miele Centre
161 Four Valley Drive
Vaughan, ON L4K 4V8
www.miele.ca

Customer Care Centre
Phone: 1-800-565-6435
905-532-2272
contact@miele-support.ca

International Headquarters
Miele & Cie. KG
Carl-Miele-Straße 29
33332 Gütersloh
Germany

Miele

KWTUS 7172 ...

en-US

M.-Nr. 12 794 540 / 06 / 002